DME®

DME

MOLD COMPONENTS







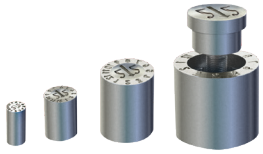



Table of Contents

Terms and Conditions of Sale 7
Sales and Ordering Information 8



Slide Action Components

Slide Retainers 12-24
Angle Pins and Angle Pin Inserts 25-29
Wear Strips & Plates 30-37
Wear Ways 36-37
Gib Assemblies 38-45
Hydraulic Locking Core Pull Cylinders 47-55
Krytox® TM7 Grease 56



Molding Undercuts

UniLifter® Systems 59-64
VectorForm Lifter Systems 65-78
Hydraulic Unscrewing Devices 79-88
Collapsible Cores 91-96
Expandable Cavity Systems, Standard 97-99
Expandable Cavity Systems, Custom 100-108
Quote Request Form: Expandable Cavity Systems 106
Expandable Cavity Systems, Typical Parts & Molding Layouts 107-108

Plate and Pin Control

Helical Gear Stack Mold System 111-119
eStore & CAD Data Resources 120
2-Stage Ejectors 121-140
Mold Plate Operation 142-152
- Internal Latch Lock 143-150
- External Latch Lock 151-152
- Accelerated Knock-Outs 153
- Accelerated Ejectors 154-155
- Early Ejector Return Assembly 156-157
- Knock-Out Extension Pucks 158-159
- Latch Locks and Pullers 160-163

DME & CounterView® Mold Counters 164-169
FasTie® Quick Ejector Tie-In System, Ej Couplers, Friction Puller 170-179
Limit Switches 180-183
Innovative Mold Interlocks 186-201
- IN2, Straight-Side, X-Style
- Black & Gold Interlocks
- Parting Line, Tapered
- Mold Straps



Cavity and Core Components

CUMSA 212-213
Mold Dating Inserts – Indexable, Front Removable 206-207
Hi-Temperature/Blind Hole 208-209
Dual-Ring 210
Blind Hole 211
Resin Identifiers 218
Food & Container Identifiers and Insert Spacers 219
Recycling Inserts & Recycling Electrodes 220
Sintered Vents 222-223
Vortex® Core Pins and Plugs 224
Air Poppet Valves 225-226
Runner Shut-Off Inserts 227-228
Tunnel Gate Inserts 229-237



Table of Contents



Mold Cooling

Mold Cooling 223-252

- Jiffy-Tite® Connectors, Plugs
- Jiffy-Matic, Jiffy-Lok® Connectors
- Jiffy-Tite® Connector Seals, Tool Kit, Wrenches
- Coolant Bridges
- Jiffy-Tite® Cascade Water Junctions
- MoldBasics® Hose Connectors
- Bubbler Tubes, Brass Plugs and Rods
- Cascade Water Junctions
- Brass Pressure Plugs
- Plastic & Brass Baffles
- Heat Pipes
- Insulator Sheets and Locating Rings
- TruCool™ Mold Cooling



Mold Components

INCH 254-287

- Guide Pins
- Shoulder & Straight Bushings
- Self-Lubricating Bushings
- Solid Bronze & Bronze-Plated Bushings
- Guided Ejection Guide Pins & Bushings
- Mold Parts for 34R Assemblies
- Support Pillars and Stop Pins
- Sprue Bushings
- Locating Rings
- 3-Plate Extension Bushings
- Special Guide Pins Fax Form

Metric..... 288-307

- Guide Pins
- Angle Pins
- Guide Pin Bushings
- Locating Sleeves & Rings
- Sprue Bushings
- Support Pillars
- Tubular Dowels
- Dowel Pins
- Screws – Socket Head Cap, Flat Head
- Lock Washers
- Stop Disk



Pins, Sleeves and Blades

INCH – Pins, Sleeves, Blades.... 313-335

- Ejector Pins – Straight
- Ejector Pins – Shoulder
- Ejector Sleeves
- Ejector Blades
- Thin Wall Sleeves & Sleeve Extensions
- Core Pins
- Return and Sprue Puller Pins
- Core Pin Retainers
- Comparison Table Specifications

DIN – Pins, Sleeves, Blades..... 336-347

- Ejector Pins
- Shoulder Ejector Pins
- Ejector Sleeves
- Ejector Blades
- Core Pins

JIS – Pins, Sleeves, Blades.... 348-353

- Ejector Pins
- Ejector Blades
- Ejector Sleeves

Special Pins and Sleeves 354-356



Mold Assembly

Mold Assembly 361-394

- Bolts, Screws and Lock Washers
- Keys and Key Kits
- Set Screws
- Tubular Dowels and Dowels
- Mold and Die Springs
- Belleville Washer
- Codipro Swivel Eyebolts, Hoist Rings & Shackles
- Hoist Rings
- Forged Eyebolts
- Permanent Magnetic Lifters
- Chain Slings
- Min Recommended Assem Screw Holes

MOLD COMPONENTS

Index

Accelerated Ejectors 154-155
Accelerated Knock-Outs 153
Adapter ..... see Sprue Bushings
Adapter with Screw, FW 1851 – 2-Stage Ejectors 140
Air Poppet Valves 225-226
Angle Pins, INCH 25
Angle Pins, METRIC 28-29, 295
Angle Pin Inserts 26-27
Arburg Locating Rings 270
Arburg Mold Assembly Components 270-271
Arburg Sprue Bushing 277
Assembly Screws Min. Recommended Table 392-393
Baffle Bars 162
Baffles, Turbulent Flow Plastic 242-243
Base Plates, for Gib Assemblies 38
Belleville Washers (Disc Springs), METRIC 379
Brass Diverting Plugs and Rods 239
Brass Plug Baffles, Spiral 245
Brass Plug Baffles, Straight 244
Brass Pressure Plugs 241
Bubbler ..... see Cascade Water Junctions
Bubbler Tubes 239
Bumper Pins ..... see Return Pins
Bushings, 3-Plate Extension 283-284
Bushings, Bronze-Plated INCH 263
Bushings, Bronze-Plated METRIC 299
Bushings, Solid Bronze 264
Bushings, Guide Pin (with Collar) METRIC 298
Bushings, Guide Pin (without Collar) METRIC 300
Bushings, Guided Ejection 266-267
Bushings, Guide Pin (with Collar) METRIC 300
Bushings, Self-Lube Guide Pin (without Collar) METRIC 300
Bushings, Self-Lubricating INCH 262
Bushings, Shoulder 260
Bushings, Shoulder 2", 2.5", 3" Diameter 261
Bushings, Straight 260
Buttons ..... see Stop Pins
CAD Data Resources 120
Cam Pins ..... see Angle Pins
Cascade Water Junctions 240
Cascade Water Junctions, Jiffy-Tite® 233
Centering Bushing, Locating Sleeves METRIC 301
Codipro Swivel Shackles Hoist Rings & Eyebolts 380-384
Collapsible Core, DoveTail 93-96
Collapsible Core Mini 92
Collapsible Core Standard 91
Column ..... see Support Pillars
Cooling Products – Jiffy-Tite®, MoldBasics® 225-241
Core Pins, DIN Hardened 345
Core Pins, DIN Copper-Based Alloy 346
Core Pins, INCH High Hardness 326
Core Pins, INCH Standard Hardness 325
Core Pins, Copper-Based Alloy 328-329
Core Pin Retainers 330
CounterView® & DME Mold Counter 164-169
Custom Pins & Sleeves **Quote Request Form** 356
CUMSA 212-213
Detent Plate ..... see SmartLock®
DIN Pins, Sleeves, Blades **Quote Request Form** 347
DME Ejector and Core Pin Diameters Table 357-359

Dowel Pins and Tubular Dowels, INCH 372
Dowel Pins, Pull Dowels (Internal Thread) METRIC 305, 373
Early Ejector Return Assembly 156-157
Ejector Blades, DIN Hardened 344
Ejector Blades, DIN Nitrided 343
Ejector Blades, INCH 323-324
Ejector Blades, JIS 350
Ejector Pins, Close Tolerance 319
Ejector Pins, DIN Hardened 338
Ejector Pins, DIN Nitrided 337
Ejector Pins, DIN Shoulder, Hardened 340
Ejector Pins, DIN Shoulder, Nitrided 339
Ejector Pins, INCH EX Keyed 316
Ejector Pins, INCH EX Shoulder 315
Ejector Pins, INCH EX Straight 314
Ejector Pins, INCH THX Keyed 318
Ejector Pins, INCH THX Straight 317
Ejector Pins, JIS Straight 349
Ejector Return Couplings 178
Ejector Sleeves, DIN Hardened 342
Ejector Sleeves, DIN Nitrided 341
Ejector Sleeves, INCH Nitrided OD and OD/ID 321-322
Ejector Sleeves, JIS 351-353
Ejector Sleeves (Thin Wall) and Extensions 320
Ejectors, Accelerated 154-155
Ejectors, 2-Stage 122-140

Expandable Cavity Systems 97-108
Expandable Cavity Custom **Quote Request Form** 106
External Latch Lock 151-152
Eyebolts, Forged 388
FasTie Quick Ejector Tie-In System 170-177
Flat Head Screws, METRIC 307, 368
Fountains ..... see Cascade Water Junctions
Friction Pullers 179
Gate Cutters 308
Gib Assemblies, Self-Lubricating 26
Guide Pins METRIC 28-29, 291-294
Guide Pins, 2", 2.5", 3" Diameter 261
Guide Pins, for Special Mold Tooling 285-286
Guide Pins, Guided Ejection 265
Guide Pins, Hardened 258

MOLD COMPONENTS

Index

Guide Pins, Shoulder, Hardened 259
Guide Pins, with Collar METRIC 292-294
Guide Pins, without Collar METRIC 296-297

Guided Ejection Systems 268-269
Hardness Conversion Table & Hardness Data 335
Heat Pipes 246-247
Helical Gear, Stack Mold Systems 112-119
Hoist Rings Eyebolts & Swivel Shackles 380-388
Hollow Dowels ..... see Tubular Dowels
Horn Pins ..... see Angle Pins
Hydraulic Locking Core Pull Cylinders (HLCP) 46-55
HLCP **Quote Request Form** 55
Hydraulic Unscrewing Device 80-88
Insulator Sheets, High Temperature 248-249
Interlocks, Black and Gold, INCH 197-198
Interlocks, Black and Gold, METRIC 199-200
Interlocks, IN2 Side 186-187
Interlocks, Parting Line 191-192
Interlocks, Straight-Side 188
Interlocks, Tapered Rectangle, INCH 196
Interlocks, Tapered Round, INCH 193-194
Interlocks, Tapered Round, METRIC 195
Interlocks, X-Style 189-190
Internal Latch Lock 143-150
Jiffy Latch-Lok® Assemblies 160-161
Jiffy-Tite® Cooling Products 225-233
Keys and Key Kits, INCH 366
Keys, METRIC 367
Knock-Out Extension Pucks 158-159, 274-275
Knock-Out Rod ..... see Return Pins
Knock-Outs, Accelerated 153
Krytox®, DuPont™ TM7 Grease 56, 331
Latch Locks 143-163

L-Gibs 40-44
L-Gibs, Bronze-Plated 42
L-Gibs, Self-Lubricating 43-44
Lifting Chains 390
Limit Bolts ..... see Shoulder Bolts
Limit Switches 180-183
Locating Rings for Plastic Molds 280-281
Locating Rings, METRIC 302
Locating Rings (for use with Insulator Sheets) 281
Locating Sleeves 301
Lock Washers (Spring Washers), METRIC 306, 365
Magnetic Lifters 389
Metric Equivalents and Conversions 287
Min. Recommended Additional Assy SHCS - CHART ... 392-393
Mold and Die Springs, Extra Heavy Duty Green 378
Mold and Die Springs, Heavy Duty Gold 377
Mold and Die Springs, Medium Duty Blue 375
Mold and Die Springs, Medium Heavy Duty Red 376
MoldBasics® Cooling Products 234-238
Mold Components, Euro-Series (METRIC) 290-307
Mold Components, Inch 257-286
Mold Counter, CounterView® 164-169
Mold Dating Inserts, Dual-Ring 210
Mold Dating Inserts, Indexable & Front Removable 206-207
Mold Dating Inserts, Blind Hole Applications 211
Mold Dating Inserts, Hi-Temperature/Blind Hole 208-209
Mold Inserts, Resin Identifiers 212
Mold Inserts, Food & Container Identifiers 219
Mold Insert Spacers 219
Mold Parts, 34R Mold Assemblies 270
Mold Assembly Parts, Shoulder Guide Pins & Bushings 271
Mold Service Table 360
Mold Straps 201
MUD Quick-Change® Components Overview 394
Rings 232

Pillows ..... see Support Pillars
Pins and Sleeves Comparison Chart 334
Pins and Sleeves **Quote Request Form** 333, 347, 356
Plastic Baffles, Turbulent Flow 242-243
platenGUARD™ 282
Posts ..... see Guide Pins
Pressure Plugs, Brass 241
ProWeld Micro-welding System 202
Puller Pins ..... see Sprue Puller Pins
Push Back Pins ..... see Return Pins
Recycling Inserts & Electrodes 214-215
Resin Identifiers 212
Rest Buttons ..... see Stop Pins
Return Pins, INCH 331
Runner Shut-Off Inserts 227-228
Set Screws with Dog Point (Allen Head), METRIC 371
Set Screws with Flat Point (Grub Screw), METRIC 371
Set Screws with Spring Loaded Ball Plunger, METRIC 370
Set Screws with Spring Loaded Plunger, METRIC 369
Shoulder Bolts, INCH 366
Shoulder Bolts, METRIC 367
Shoulder Screw ..... see Shoulder Bolts
Sintered Vents 222-223
SLIDE Econo-Spray® Pin Lube & Grease 316
Slide Retainer, SmartLock® 16-19
Slide Retainers 12-24
Slide Retainers, Mini-Might® 12-15
SmartLock® Slide Retainer and Limit Switch 16-19
Socket Head Cap Screw, INCH 364
Socket Head Cap Screw, METRIC 306, 365

MOLD COMPONENTS

Index

Socket Head Stripper Bolts, INCH 366
Special Guide Pins **Quote Request Form** 286
Special Pins and Sleeves 355-356
Springs 375-378
Spring Washers ..... see Lock Washers
Sprue Bushings 276-277
Sprue Bushings, Hardened, METRIC 303
Sprue Bushings, Copper-Based Alloy 278-279
Sprue Ejector Pins ..... see Sprue Puller Pins
Sprue Puller Pins, INCH 332
Square Gibs, Self-Lubricating 45
Stack Mold Systems, Overview 113-114
Stack Mold Systems, Helical Gear 115-119
Stop Buttons ..... see Stop Pins
Stop Disk (for Ejector Plates), METRIC 307, 368
Stop Pins/Disk INCH 273
Stripper Bolts ..... see Shoulder Bolts
Sucker Pins ..... see Core Pins
Support Pillars, INCH 272-273
Support Pillars, METRIC 304
Thinswitch® Limit Switches 180-183
Thin Wall Ejector Sleeves 320
TM7, DuPont™ Krytox® Grease 56, 331
TruCool™ Mold Cooling 250-252
Tubular Dowels & Dowel Pins, INCH 372
Tubular Dowels, METRIC 301
Tunnel Gate Inserts 229
Turbulent Flow Plastic Baffles 242-243
Two-Stage Ejectors 122-140
UniLifter® System 60-64
VectorForm Lifter Systems 66-78
Vortex® Core Pins & Plugs 224
Washer Disk for Tubular Dowels, METRIC 301, 374
Washers, Belleville – Disc Spring 379
Washers, Lock Washers – Spring 306, 365
Wear Strips & Plates, Bronze-Plated 30-33
Wear Plates, Self-Lubricating 34-35
Wear Ways, Self-Lubricating 36-37



AHP Merkle Hydraulic Cylinders

















MOLD COMPONENTS

DME COMPANY LLC ("SELLER")
TERMS AND CONDITIONS OF SALE

1. ACCEPTANCE OF TERMS: Seller's offer is expressly conditioned upon Buyer's acceptance of these Terms and Conditions, and Seller expressly objects to any additional or different terms proposed by Buyer. Any subsequent purchase order issued by Buyer shall constitute Buyer's agreement to these Terms and Conditions. Any contrary terms and conditions contained in any purchase order, facility entry form, or other instrument issued by the Buyer are expressly rejected and shall not apply to this transaction. Unless otherwise specified in the quotation, Seller's quotation shall expire 30 days from its date and may be modified or withdrawn by Seller before receipt of Buyer's conforming purchase order.
2. PAYMENT TERMS: Payment is due in accordance with any applicable progress, advance or other agreed upon payment schedule, or, if no such schedule has been agreed to, no later than 30 days from the date of invoice. Buyer shall pay a late payment charge computed at the lower of 1.5% per month on any overdue balance, or the maximum rate permitted by law. No cash discount is provided. If at any time Seller reasonably determines that Buyer's financial condition or payment history does not justify continuation of Seller's performance, Seller shall be entitled to require full or partial payment in advance or otherwise restructure payments, request additional forms of payment security, suspend its performance or terminate the order.
3. DELIVERY
3.1 In the United States, products are sold FCA Incoterms 2020 point of origin; for export sales, terms are FCA Incoterms port of export. Unless otherwise agreed in writing, title and risk of loss shall pass at the time of shipment. Buyer is responsible for all taxes, duties, fees, or other governmental charges related to its purchase of goods, with the sole exception of taxes on Seller's income. Unless otherwise agreed, Buyer shall pay all packing and delivery costs.
3.2. Seller's quoted lead times and targeted delivery dates are good faith estimates and are not binding on Seller. Buyer's acceptance of delivery of Seller's products from the carrier shall constitute a waiver of any claim for delay. If Seller notifies Buyer that the products are ready for shipment and Buyer delays delivery, then Seller may charge Buyer a storage fee equal to 1.5% of the contract price per month for each month of delay. Such storage fees are in addition to any other remedies Seller may have.
3.3. Buyer shall have a reasonable opportunity to inspect any products prior to shipment. Products shall be deemed to be accepted upon the earlier of: (i) inspection at Seller's plant (provided that no reasonable objection is then raised by Buyer), or (ii) if no inspection is requested, then at shipment. If an objection is made during inspection, then Products shall be deemed accepted upon resolution of the objection by Seller.
4. WARRANTY:
4.1. Seller's express product warranty be as stated in DME's order specification documentation and shall run from the date of shipment (the "Warranty Period"). During the Warranty Period, Seller warrants that the products and services sold hereunder will be free from material defects in material, workmanship and title (the "Warranty").
4.2. If, during the Warranty Period, Seller reasonably determines that the products do not meet the Warranty, then Seller shall, at its option, repair or replace the defective product or component thereof, reperform any defective services at Seller's expense, or refund or credit to Buyer its purchase price for the defective products or services.
4.3. The Warranty will be void and will not apply: (i) when Buyer fails to promptly notify Seller of any alleged defect, (ii) when Buyer fails to properly install, maintain, or operate the products, (iii) to any product or parts thereof with a useful life, under normal operating conditions, inherently shorter than 1 month, or (iv) to products which were not made by Seller or any of Seller's affiliates, provided that in such cases Seller shall use reasonable efforts to pass on to Buyer the manufacturer's warranty.
4.4. If Seller provides any parts or services to repair a product that is not under Warranty, then such parts and services will be billed to Buyer at Seller's prevailing rates for time and materials.
4.5. The Warranty set out above is the sole and exclusive warranty provided by Seller for its products and is in lieu of, and Seller expressly disclaims, all other warranties, express or implied, oral, written or statutory. THERE ARE NO WARRANTIES OF MERCHANTABILITY OR FITNESS FOR PURPOSE FOR SELLER'S PRODUCTS.
5. LIMITATION OF LIABILITIES:
5.1. Seller's total liability to Buyer arising out of or resulting from this Contract or related in any way to Seller's products or parts thereof shall not exceed the contract price for such products.
5.2. Seller shall not be liable for loss of profit or revenues, loss of use of products, interruption of business, downtime costs, increased operating costs, or any special, consequential, incidental indirect or punitive damages, whether incurred by Buyer or Buyer's customers.
5.3. Because the conditions of actual production in each end user's plant vary considerably, Buyer assumes all risk for the results obtained by use of Seller's products in the practice of any process, whether in terms of operating costs, general effectiveness, success or failure, and regardless of any oral or written statements made by Seller related to the use of its products.
6. SECURITY INTEREST. Buyer agrees that the Seller shall have and retain a purchase money security interest in the Products securing the payment of all sums becoming due hereunder. Such security interest shall attach, upon completion of manufacture, to the Products and to any parts or accessories attached to the Products and to the proceeds of any sale thereof. Buyer represents that the Products are being acquired for use in its business and that such Products will not, without prior written consent of the Seller, be sold or removed from the Buyer's place of business to which delivery is made. Buyer agrees upon Seller's request to execute any financing statements or other documents required to perfect, continue or renew Seller's security interest in the Products.
7. CANCELLATION: Unless otherwise agreed, Buyer may cancel all or any part of the order by written notice received by Seller before the completion of the order. On receipt of such cancellation notice, all work on the order or part thereof canceled will be stopped as promptly as is reasonably possible. Buyer will then be invoiced for and will pay to Seller as liquidated damages a cancellation charge. For completed items, the charge will be equal to their established prices. For items not completed, the charge will be equal to 135% of Seller's full cost as determined by Seller in accordance with Seller's standard accounting practices (which includes burden and overhead), plus a charge for any packing and storage, less a credit for the balance of the material as scrap.
8. RETURNS: All returned items require a Return Merchandise Authorization (RMA) number from DME. Returns are subject to a quality inspection to validate whether it can be returned to inventory. Mold bases, plates, special components, made-to-order products and other date-sensitive products are non-returnable items. Items returned to DME without prior authorization(RMA)may be returned to sender. Items returned for stated defect or non-conforming reason require detailed explanation. No products are returnable beyond 30 days after receipt.
9. CONFIDENTIALITY. Any nonpublic information, including without limitation, Seller's pricing information and the contents of Seller's quotation or proposal and Buyer's purchase order, exchanged between the parties is deemed confidential ("Confidential Information"). Each party agrees to maintain the other party's Confidential Information in confidence, to not disclose the same to any third parties, and to use it only in connection with this sale. These restrictions shall expire two (2) years after the date of disclosure. This provision does not modify or supersede any separate confidentiality or nondisclosure contract signed by the parties.
10. FORCE MAJEURE: Seller shall not be liable for any delay in performance or nonperformance which is due to war, fire, flood, pandemic, acts of God, acts of third parties, acts of governmental authority or any agency or commission thereof, accident, breakdown of products, differences with employees or similar or dissimilar causes beyond Seller's reasonable control, including but not limited to, those interfering with production, supply or transportation of products, raw materials or components or Seller's ability to obtain, on terms Seller deem reasonable, material, labor, products or transportation.
11. MERGER CLAUSE: This Contract entirely supersedes any prior oral or written representations, correspondence, proposals, or contracts between the parties regarding the products. This writing constitutes the final and total expression of such contract between the parties, and it is a complete and exclusive statement of the terms of that contract.
12. ASSIGNMENT: Neither party may assign this Contract without the written consent of the other party, except that Seller may assign this Contract to a third party that acquires substantially all of Seller's assets and Seller may assign the flow of funds arising out of this Contract.
13. COMPLIANCE WITH LAWS. Each party agrees to comply with all applicable laws in the performance of its obligations; Buyer shall not trans-ship, re-export, divert or redirect Products outside of the original country of delivery without Seller's prior written consent.
14. GOVERNING LAW: This Contract shall be governed by and construed in accordance with the laws of the State of Michigan, without regard to the Convention for the International Sale of Goods (CISG), which shall not apply.

MOLD COMPONENTS

Sales and Ordering Information

U.S.A.

TERMS AND CONDITIONS OF SALE: See previous page.

PHONE ORDERS – TOLL FREE: 800-626-6653. DME's Customer Service Dept. operates Monday through Friday from 7 a.m. to 7 p.m. E.S.T. Calls can be made from anywhere in the continental U.S. and Puerto Rico (Puerto Rico: use "137" prefix instead of "1"). Our Customer Service Representatives will be happy to answer your questions on DME products or services, provide on-the-spot feedback on product availability and shipping details, or take any messages you wish relayed to your local DME sales, manufacturing or technical service representatives.

MAIL ORDERS: If you prefer to order by mail, please address your order to:

- DME Company, 29111 Stephenson Highway, Madison Heights, Michigan 48071-2330
  ATTN: Customer Service Dept.

FAX: You may fax your order to:

- DME Customer Service
  888-808-4363

EMAIL: You may email your order to:

- DME Customer Service
  customer_service@dme.net

eStore : store.dme.net

CHECKS OR MONEY ORDERS: When paying invoices by check or money order, please make payable to DME Company. Include remittance copy of invoice and mail to:

- DME Company, PO Box 854867 Minneapolis, MN 55485-4867

WALK-IN ORDERS, PICK-UPS AND RETURNS: If desired, ordered products in stock at your nearest DME Service Center can be picked up rather than shipped. Walk-in orders at Service Center locations can also be processed while you wait. Products being returned for repair or exchange should be processed through Customer Service prior to being returned.

SPECIAL MACHINING SERVICES: Prints for quotation on special machining work can be sent by EDI to dme_cad@dme.net or mailed to the Estimating Department of the DME manufacturing location nearest you. Call our toll-free number if desired to clarify location which serves your area.

Estimating locations are:

- 29111 Stephenson Highway, Madison Heights, MI 48071, FAX: 888-808-4363
- 1117 Fairplains Street, Greenville, MI 48338, Tel. 616-754-4601, FAX: 616-225-3924
- 3275 Deziel Drive, Windsor, Ont N8W 5A5, Tel. 519-948-5001, FAX: 519-948-4652

Please add "DME Company" and "Attn: Estimating Dept." to above addresses when mailing prints. To obtain prices and delivery on special mold base orders or to check status of special work in progress please contact Customer Service.

CANADA

TERMS AND CONDITIONS OF SALE: See previous page.

ORDERS, QUOTES, PICKUPS, RETURNS: Please contact 800-387-6600.

CHECK OR MONEY ORDERS: Make payable to DME Company. Include remittance copy of invoice and mail to:
3275 Deziel Drive, Windsor, ON N8W 5A5







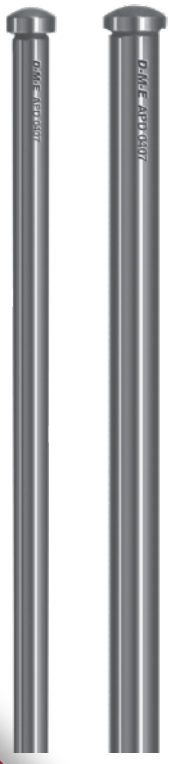

DME SLIDE ACTION

FACILITATING GREATER
MOLDING PRODUCTIVITY
THROUGH SLIDE
ACTION INNOVATION

SLIDE ACTION COMPONENTS

Table of Contents



Slide Retainers..... 12 to 24
Mini-Might® and Smart-Lock® designed to be small in size yet strong in holding capacity



Angle Pins and Angle Pin Inserts ..... 25 to 29
Supplied with a pre-machined spherical radius on the head to eliminate angle grinding

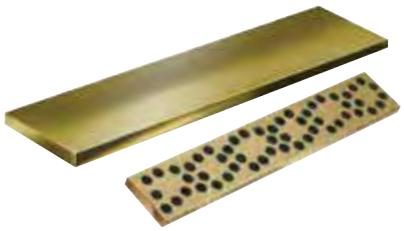

Wear Plates..... 30 to 37
Bronze-plated, self-lubricating wear surfaces for long-lasting results



Gib Assemblies..... 38 to 45
Self-lubricating, bronze-plated base plates



Hydraulic Locking Core Pull Cylinders ..... 47 to 55
Enabling cost-saving movement of sliding cores for plastics and die-cast tools



Krytox™ TM7 Grease..... 56
The "Stay-Put" Lubricant

eSTORE
store.dme.net

SLIDE ACTION COMPONENTS

Table of Contents

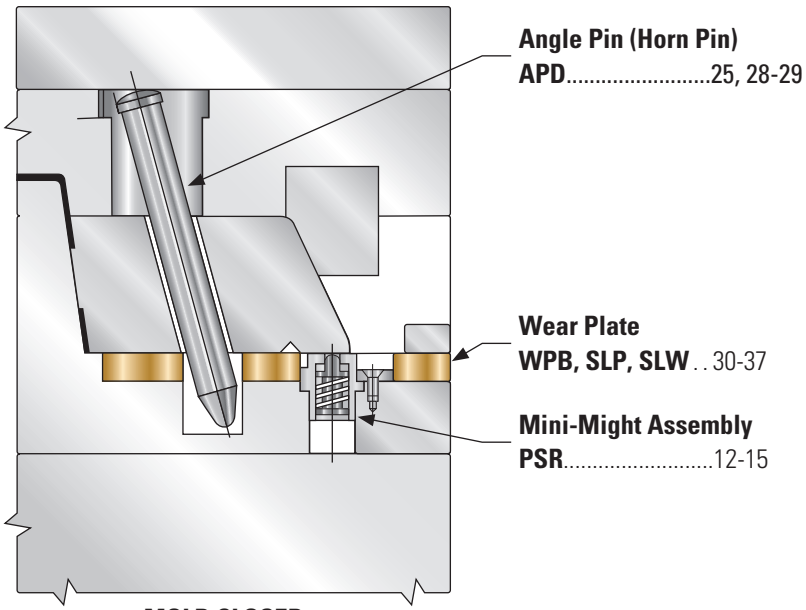

MOLD CLOSED

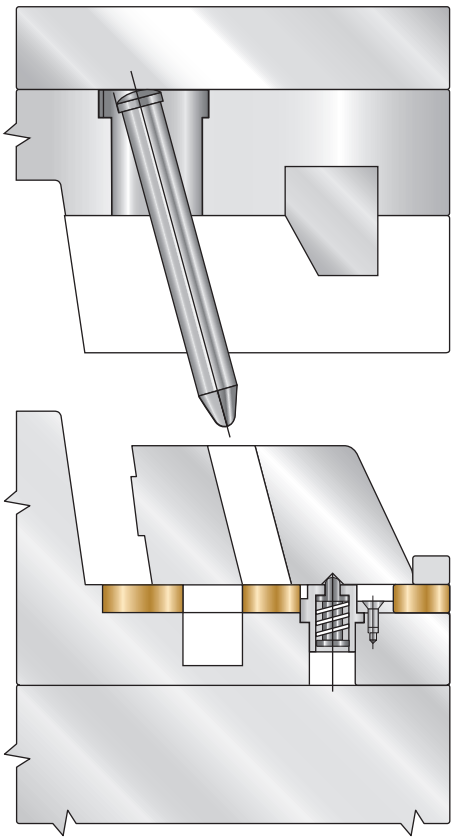

MOLD OPEN

SLIDE RETAINERS

MINI-MIGHT® SLIDE RETAINERS.....12-15
SMARTLOCK® AND LIMIT SWITCH.....16-19
SLIDE RETAINER ASSEMBLIES.....20-23
SLIDE RETAINER ACTUATION SEQUENCE 24

ANGLE PINS

ANGLE PINS.....25
ANGLE PIN INSERTS.....26-27
METRIC ANGLE PINS (GUIDE PINS).....28-29

WEAR PLATES

BRONZE-PLATED WEAR PLATES.....30-31
BRONZE -PLATED WEAR PLATES METRIC..... 32-33
SELF-LUBRICATING WEAR PATES.....34-35
SELF-LUBRICATINE WEAR WAYS.....36-37

GIB ASSEMBLIES

SELF-LUBRICATING GIB ASSEMBLIES..... 38
BASE PLATES FOR GIB ASSEMBLIES.....39
L-GIBS FOR GIB ASSEMBLIES 40-41
BRONZE-PLATED L-GIBS 42-43
SELF-LUBRICATING L-GIBS.....44-45
SELF-LUBRICATING SQUARE GIBS..... 45

HYDRAULIC LOCKING CORE PULL CYLINDERS

HLCP PRODUCT OVERVIEW..... 47-48
HLCP CYLINDER ADVANTAGES.....49-52

MOLD DESIGN & INSTALLATION

CONSIDERATIONS..... 53-54
HLCP – FAXABLE QUOTE FORM..... 55
Krytox TM7 Grease..... 56

SLIDE ACTION COMPONENTS

Mini-Might® Slide Retainers

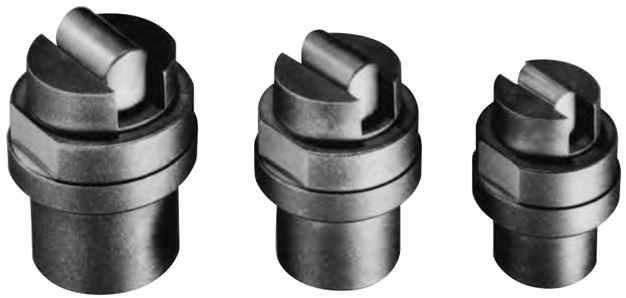

(U.S. Patent No. 5,397,226)

- Three sizes with retaining ratings for 10, 20 and 40 lbs.
- Small in size yet strong holding capacity
- Product design facilitates easy installation
- Slide can be removed without removing the slide retainer from the mold
- Self-contained design
- Line contact engagement

Installation Dimensions for Machining V-Groove in Slide

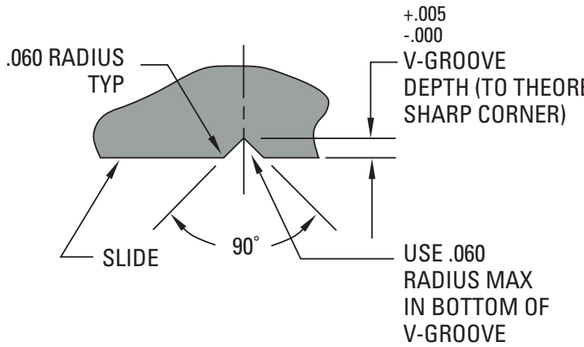

ITEM NUMBER	V-GROOVE DEPTH
PSR1000	.091
PSR2000	.153
PSR4000	.194

NOTE: See "Pocket Dimensions" for additional information.

DME

SLIDE ACTION COMPONENTS

Mini-Might® Slide Retainers

Dimensional Information for Mini-Might® Slide Retainers – PSR

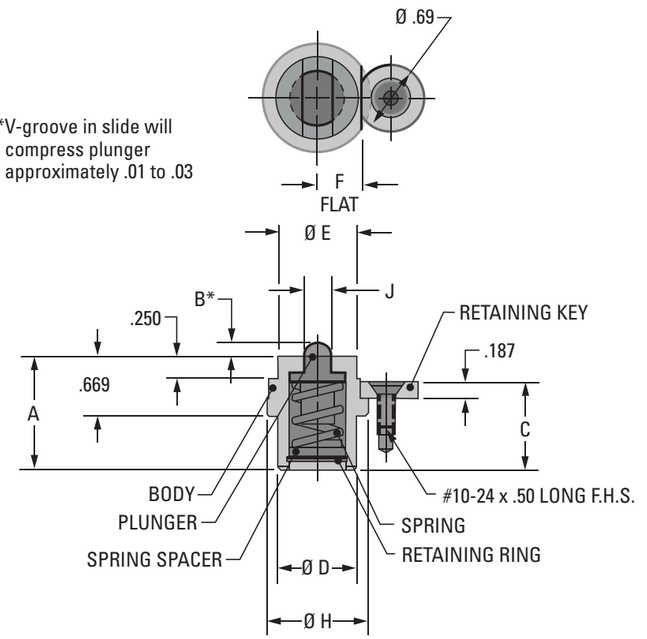

ITEM† NUMBER	MAXIMUM RECOMMENDED HOLDING WEIGHT
PSR1000	10 POUNDS
PSR2000	20 POUNDS
PSR4000	40 POUNDS

All items in stock.

HOW TO ORDER: Use Item Numbers in charts for ordering.

†Each includes: slide retainer assembly, retaining key and #10-24 x .50 long flat head screw. Replacement parts are special order.

ITEM NUMBER	A	B	C	Ø D	Ø E	F FLAT	Ø H	J PLUNGER
PSR1000	1.08	.072	.795	.620	.630	.375	.866	.188
PSR2000	1.32	.121	1.035	.740	.748	.420	.984	.250
PSR4000	1.26	.149	.975	.870	.866	.468	1.102	.312

Material: Hardened H-13 Steel (Body and Plunger)

SLIDE ACTION COMPONENTS

Mini-Might® Slide Retainers

Typical Application

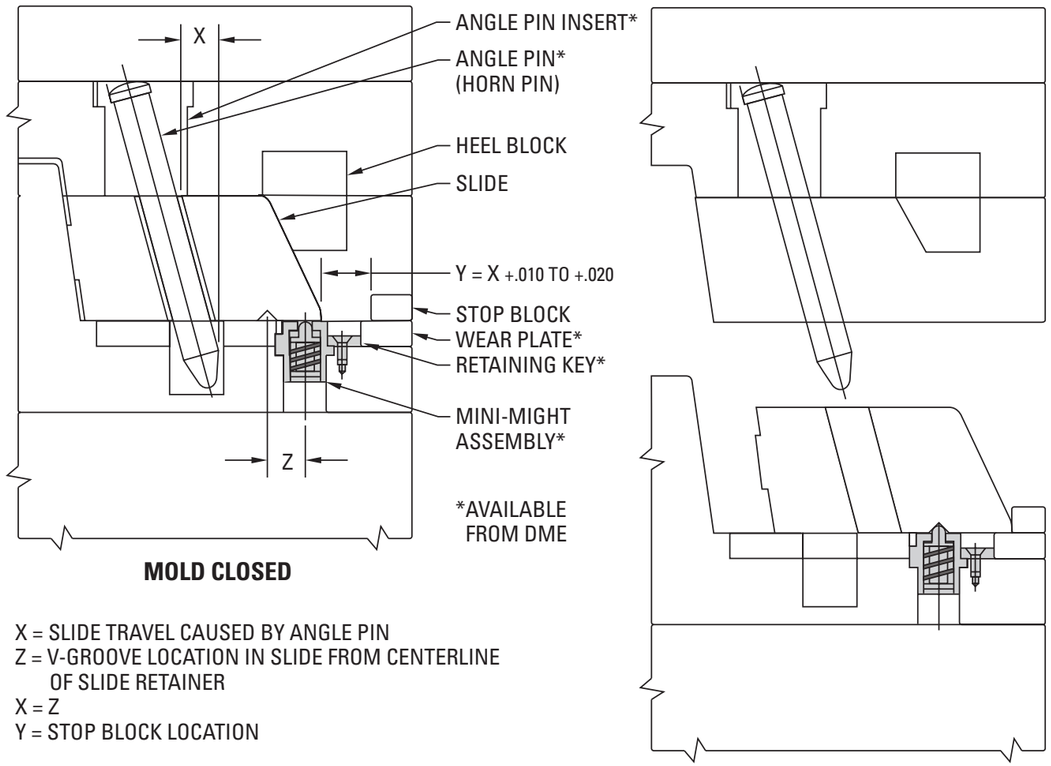

MOLD CLOSED

MOLD OPEN

X = SLIDE TRAVEL CAUSED BY ANGLE PIN
Z = V-GROOVE LOCATION IN SLIDE FROM CENTERLINE OF SLIDE RETAINER
X = Z
Y = STOP BLOCK LOCATION

NOTES:

1. Lubricate all metal-to-metal contact areas before first use and every 100,000 cycles (or more frequently as required). Use a good grade of moldmakers' non-melting type grease rated for the operating temperature to be encountered.
2. Replace compression spring every 1,000,000 cycles or as required.
3. **Do not operate at temperatures exceeding 250°F.**

DME

SLIDE ACTION COMPONENTS

Mini-Might® Slide Retainers

Typical Application

Pocket Dimensions for Mini-Might® Slide Retainers – PSR

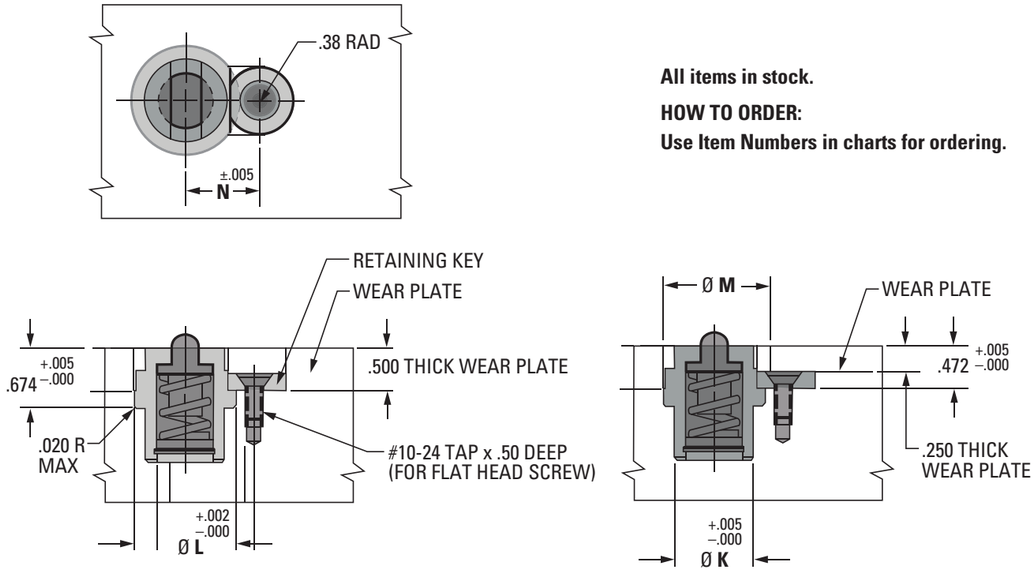

All items in stock.

HOW TO ORDER:
Use Item Numbers in charts for ordering.

NOTE: Use .028 thick spacer under retaining key when mold has been machined for .500 thick wear plate. Mold maker to machine to suit.

NOTE: .500 thick wear plate can also be used to key and retain Mini-Might slide retainer instead of retaining key. Mold maker to machine to suit.

ITEM NUMBER	Ø K	Ø L	Ø M	N DIM
PSR1000	.625	.869	.94	.670
PSR2000	.750	.987	1.06	.715
PSR4000	.875	1.105	1.19	.763

SLIDE ACTION COMPONENTS

SmartLock® Slide Retainer and Limit Switch



(U.S. Patent No. 6,126,429)

Available via

eSTORE

store.milacron.com

The SmartLock® slide retainer and limit switch is designed for injection molders to provide switching and a slide detent in one unique package. The SmartLock locking function prevents premature slide movement during molded part ejection while the SPDT switch is simultaneously actuated.

The SmartLock slide retainer and limit switch has been tested for reliability over 10 million cycles without failure. Two or more switches may be used for larger molds, or molds with multiple slides. Slide position verification and prevention of mold damage results when the Smartlock slide retainer and limit switch is installed in a mold.

- Prevents damage caused by premature slide movement
- 17 to 27 pounds holding force – adjustable for optimum operation
- 175°F (79.4°C) standard temperature rating enables use for most molding applications
- Quality tested over 10 million cycles to provide long, dependable service
- Flush-mounted switch is shielded from damage by mounting inside a protective milled pocket
- Stripped and tinned 6 ft. wire leads make the switch ready to install without modification
- Mounting screws and wire clips supplied for neat and easy installation

DME

SLIDE ACTION COMPONENTS

SmartLock® Slide Retainer and Limit Switch

SmartLock Slide Retainer and Limit Switch – SLS2220

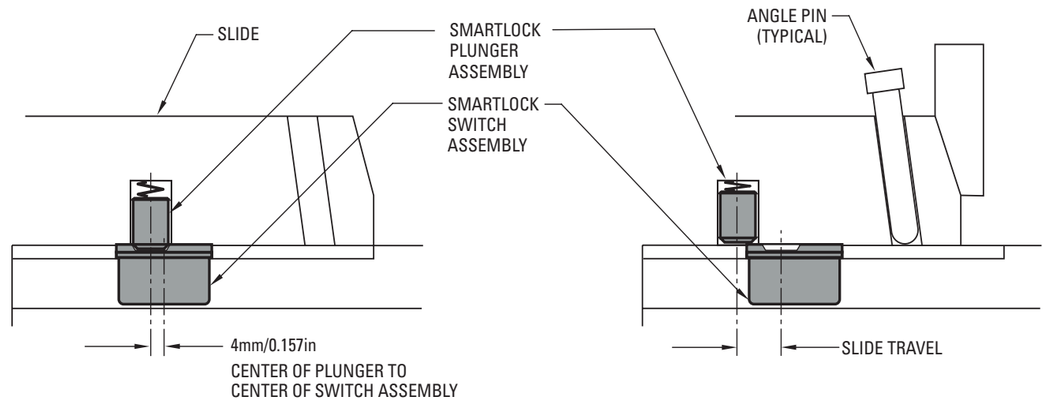

Slide Locked **Slide Unlocked**

NOTE: Please contact DME for high-temperature applications.

ITEM NUMBER
SLS2220

CE

EN 60947-5-1

SPECIFICATIONS	
BREAK-AWAY	17 TO 27 LBS.
FORCE	(USER ADJUSTABLE)
ELECTRICAL	250VAC/28VDC 4 AMPS INDUCTIVE 5 AMPS RESISTIVE REQUIRES 3-PIN CONNECTOR WITH MINIMUM RATINGS LISTED ABOVE
OPERATING TEMPERATURE	175°F MAX.
	(79.4°C MAX.)
SWITCHING	SPDT

MATERIALS	
SWITCH ASSEMBLY BODY	FIBERGLASS-REINFORCED NYLON
PLATE	HARDENED STEEL
PLUNGER ASSEMBLY	HARDENED STEEL
WIRE LEADS	22GA STRANDED, 3 CONDUCTOR, SHIELDED CABLE, 6 FT. (1.8M) LONG, ENDS STRIPPED AND TINNED

SLIDE ACTION COMPONENTS

SmartLock® Slide Retainer and Limit Switch

The SmartLock switch is designed for use in very low power mold protection control circuits. It is not intended to switch heavy loads in power applications.





Rated Current vs. Steel Temperature – SLS2220

AMPS	°F	°C
5.0	85	29.4
4.0	120	49.0
3.0	155	68.3
2.0	175	79.4

Parts Included in SmartLock Slide Retainer and Limit Switch – SLS2220

SmartLock includes 2 wire clamps.

DESCRIPTION	QTY	REPL ITEM NUMBER
SWITCH ASSEMBLY	1	
SWITCH MOUNTING SCREWS (#6-32 X ⅜" FLAT HEAD)	2	SLFH222A
WIRE CLAMPS (.5" X .82" X .15" WITH .213" MOUNTING HOLE)	2	
WIRE CLAMP SCREWS (#10-24 X ½" BUTTON HEAD)	2	1024BHCSA
PLUNGER ASSEMBLY	1	PLUNGER, SMALL - SLP222A PLUNGER SPRING - SLSP222
INSTRUCTION SHEET	1	

Plunger Assembly Pocket Dimensions

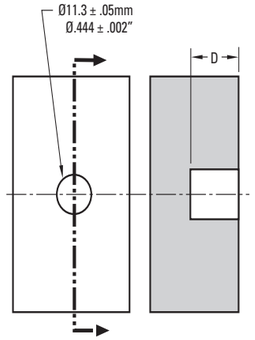

Break-away Force vs. Bore Depth

[.001" (.025MM) clearance under slide]

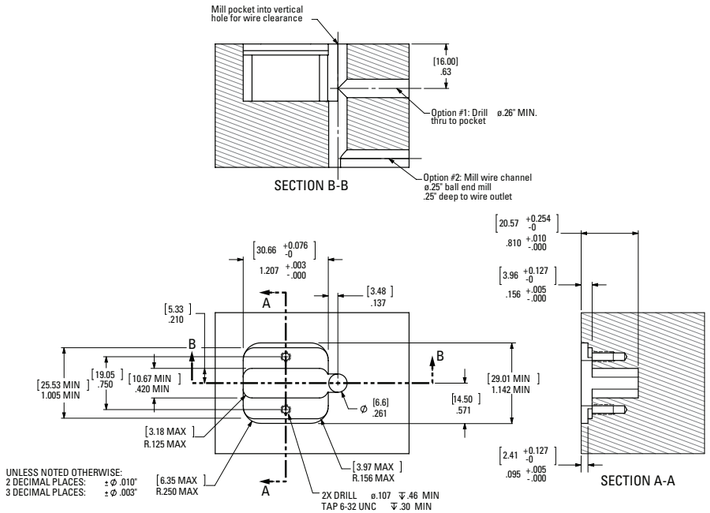

Suggested machining and wire routing.

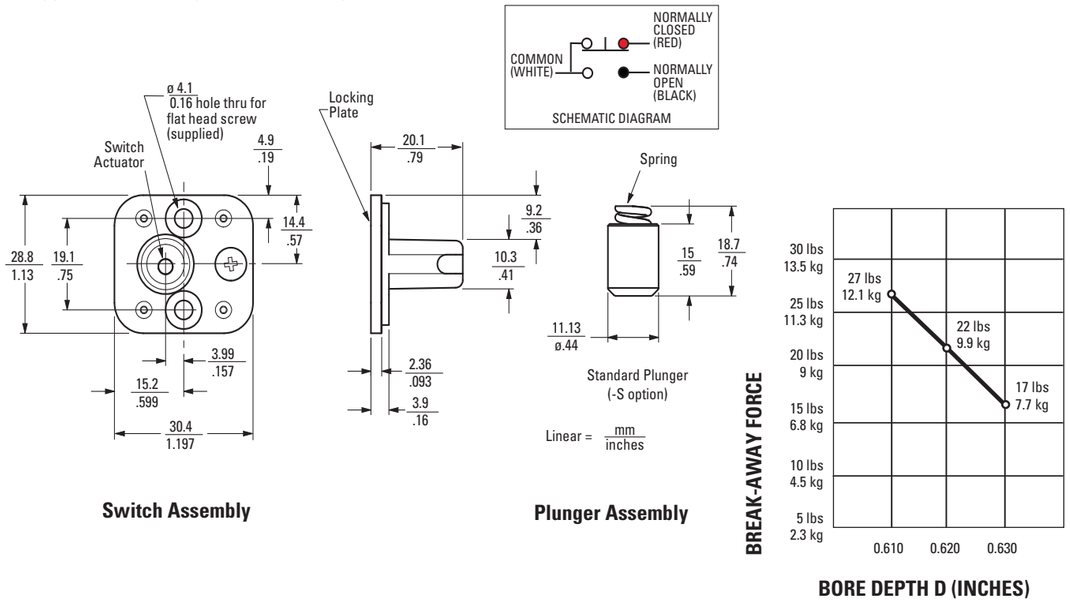

SLIDE ACTION COMPONENTS

Slide Retainer Assemblies

The DME Slide Retainer provides a compact and economical means of slide retention, which makes obsolete the cumbersome external spring or hydraulic methods. Its simple and positive operation makes it equally suitable for new tooling design or retrofitting existing molds. Available in three sizes with increasing weight-holding capacities, the Slide Retainers can be used individually or in multiples for larger or heavier slides.

Generally mounted behind and below the slide (see drawing at right), the DME Slide Retainer is a compact unit that can be entirely contained within the mold. Interference with machine tie bars or safety gates is no longer a problem. (It can even be installed completely underneath the slide if space is limited.)

As the mold opens, the dowel pin installed in the slide positively locks into the retainer until disengaged by the mold's closing action. The custom-designed spring placed crosswise in the retainer maintains the force required to keep the dowel pin in the jaws when the mold is open.

The Slide Retainer is designed with a generous lead-in at the jaw opening so the dowel pin will enter the jaws even if there is a slight misalignment between the retainer and the pin.

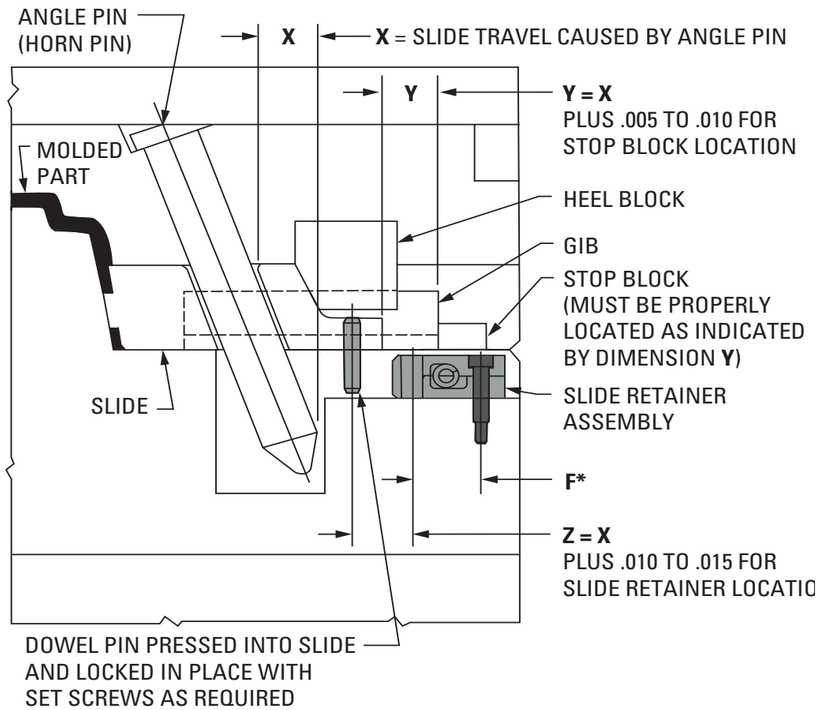

NOTE:

To prevent the dowel pin from contacting and applying pressure against the back of the retainer jaw (which could cause bending or shearing of the dowel pin or hold-down shoulder screw) the installation dimensions shown on these pages are recommended.

DME

SLIDE ACTION COMPONENTS

Slide Retainer Assemblies

Slide Retainer Assemblies – PSL

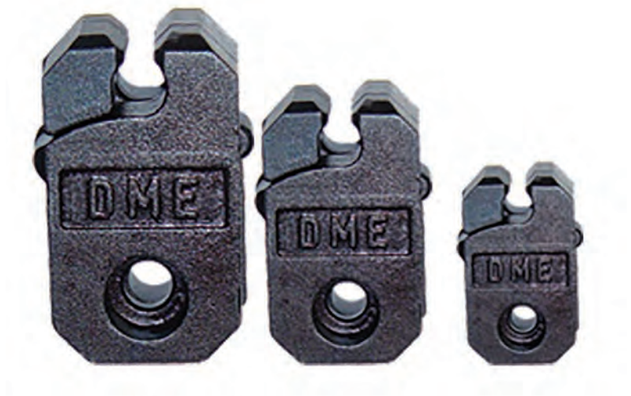

U.S. Patent No. 4,961,702

ITEM† NUMBER	MAXIMUM RECOMMENDED HOLDING WEIGHT
PSL0001	22 POUNDS
PSL0002	44 POUNDS
PSL0003	88 POUNDS

HOW TO ORDER:

Use Item Numbers in charts for ordering.

Material: Investment Cast from 8620 steel
Hardness: Case-Hardened 58-62 HRC

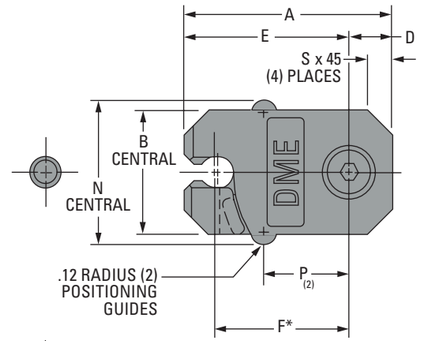

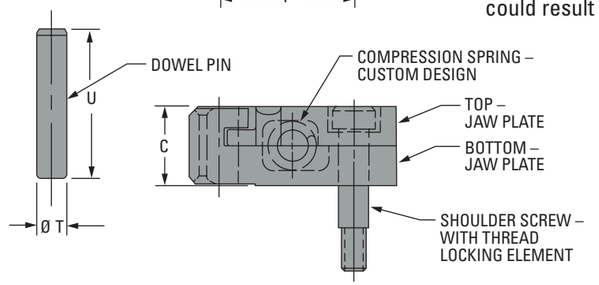

†Includes top and bottom jaw plate, compression spring, shoulder screw with thread locking element and dowel pin.

*Dimension F, the distance from dowel pin centerline at end of slide travel and centerline of shoulder screw, is important. Overtravel of dowel pin beyond clearance provided at back of jaw area could result in damage to retainer..

ITEM NUMBER	A	B	C	D	E	F*	N	P	S	T	U
PSL0001	1.50	.76	.63	.27	1.23	.980	.94	.61	.14	.250	1.25
PSL0002	2.13	1.26	.79	.44	1.69	1.375	1.44	.88	.25	.312	1.50
PSL0003	3.38	1.76	1.18	.75	2.63	2.125	1.94	1.57	.38	.375	2.25

All items in stock.

Pocket Dimensions/Installation Guidelines

(Slide Retention Application Shown)

Section A-A

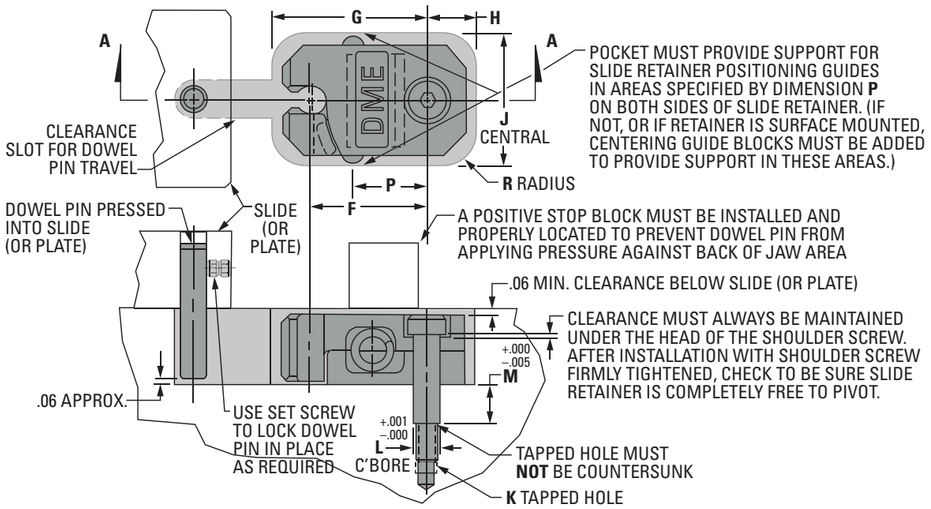

ITEM NUMBER	F	P	G	H	J	R RAD	K TAPPED HOLE AND TAP DEPTH BELOW C'BORE	L C'BORE	M C'BORE DEPTH
PSL0001	0.980	0.61	1.35	.39	1.00	.31	#10-24 X .50 DEEP	.249	.310
PSL0002	1.375	0.88	1.81	.56	1.50	.37	1/4-20 X .56 DEEP	.3115	.430
PSL0003	2.125	1.57	2.75	.88	2.00	.50	5/16-18 X .62 DEEP	.374	.580

NOTES:

1. Dimension F, the distance from dowel pin centerline at end of slide travel and centerline of shoulder screw, is important. Overtravel of dowel pin beyond clearance provided at back of jaw area could result in damage to retainer.

SLIDE ACTION COMPONENTS
Slide Retainer Assemblies

NOTES:

1. Lubricate all metal-to-metal contact areas before first use and every 100,000 cycles (or more frequently as required). Use a good grade of moldmakers' non-melting type grease rated for the operating temperature to be encountered.
2. **Do not operate at temperatures exceeding 225°F.**
3. If two or more retainers are used, mount them uniformly to provide a balanced operation. Retainer sizes should not be mixed in a multiple retainer application.
4. Surface to which retainer is mounted should not prevent retainer from pivoting freely.
5. Replace retainer assembly and/or dowel pin when total wear in jaw area or on dowel pin exceeds .010.
6. Replace compression spring every 1,000,000 cycles or as required, following procedures packaged with retainer.

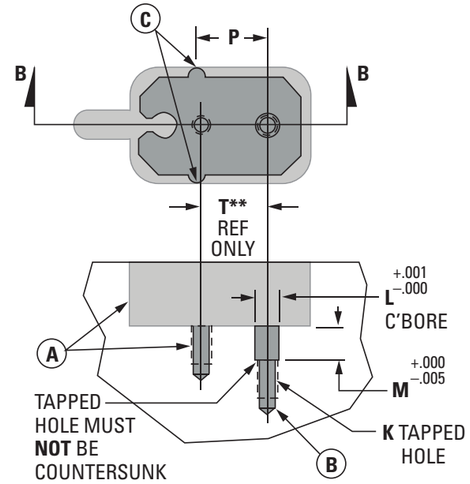

Section B-B

Retrofit Data for Molds with Previous Design Slide Retainers

ITEM NUMBER	K TAPPED HOLE AND TAP DEPTH BELOW C'BORE	L C'BORE	M C'BORE DEPTH	P	T** REF ONLY	FOR REPLACEMENT OF SLIDE RETAINER ITEM NUMBER
PSL0001	#10-24 X .50 DEEP	.249	.310	.61	.620	MRT22
PSL0002	1/4-20 X .56 DEEP	.3115	.430	.88	.875	MRT44
PSL0003	5/16-18 X .62 DEEP	.374	.580	1.57	1.325	MRT88

Dimension **T is for reference only. See charts and application drawings to determine specific installation dimensions.

HOW TO ORDER: Use Item Numbers in charts for ordering. **All items in stock.**

NOTES:

A. Existing pocket and tapped hole for previous slide retainer (MRT22, 44 or 88).
B. Drilling, tapping and counterboring for shoulder screw at new location is required per drawing and chart dimensions.
C. Existing pocket must provide support for retainer positioning guides in areas designated by dimension P or centering guide blocks must be added.

SLIDE ACTION COMPONENTS

Slide Retainer Actuation Sequence Section Views

Mold Closed

Step 1: Mold is closed, Sliding cores are in position for molding parts

Mold Open

Step 2: Mold is fully open. Movement of the B-side of molds causes A-side angle pins to push sliding cores away from stationary cores. Sliding cores must lock in position via slide retainers to ensure proper mate with angle pins when mold closes.

Ejection

Molded part ejects. After ejection the mold may close. Angle pins will mate up with angle pin holes in sliding cores, pushing sliding cores towards the stationary cores.

Slide Retainer®

- PSL0001
- PSL0002
- PSL0003

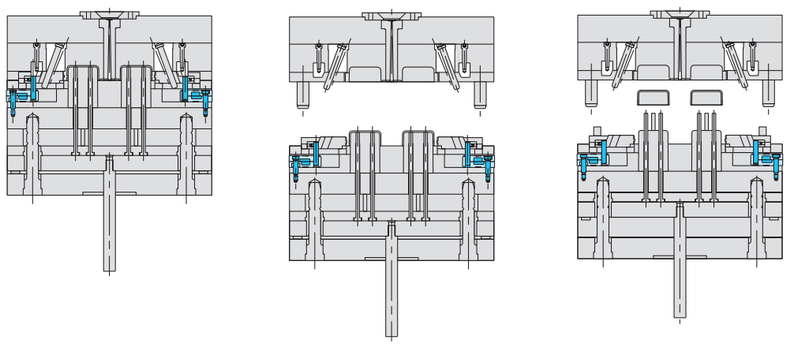

Smart Lock® Slide Retainer

- SLS2220

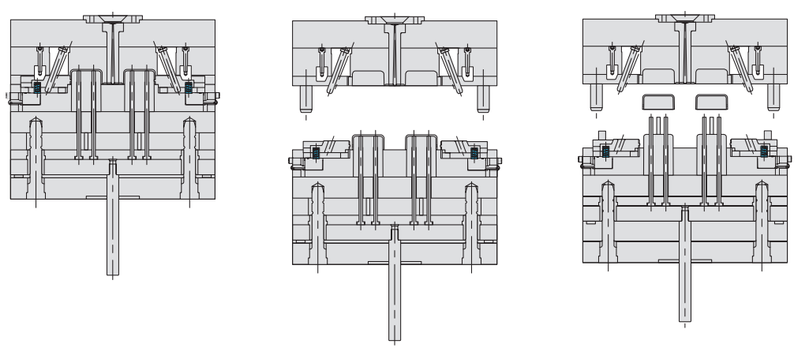

Mini-Might® Slide Retainer

- PSR1000
- PSR2000
- PSR3000

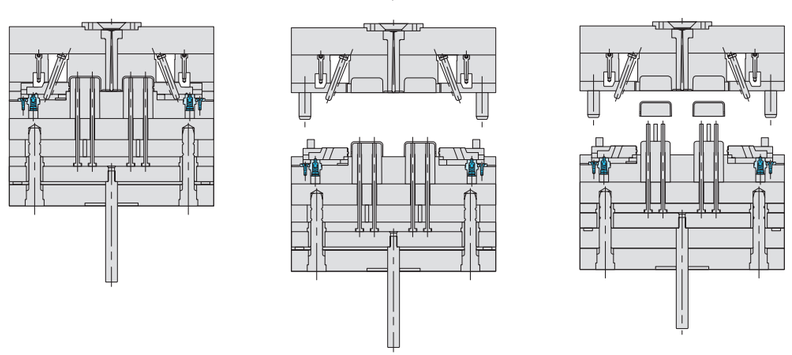

SLIDE ACTION COMPONENTS

Angle Pins



DME Angle Pins are supplied with a pre-machined spherical radius on the head to eliminate angle grinding usually required on the pin head.

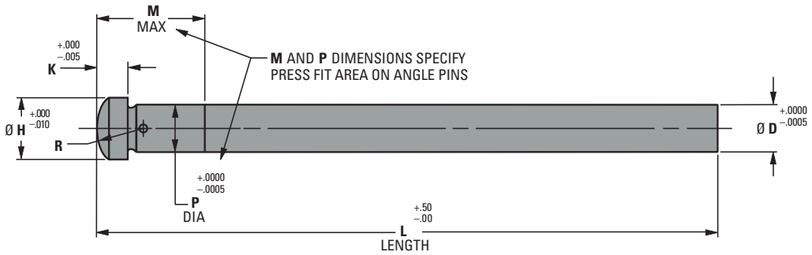

Angle Pins– APD

Material: H-13 Type Steel, 65-74 HRC Nitrided Surface, 30-35 HRC Core

ITEM NUMBER	Ø D	L LENGTH	M MAX	Ø H	K HD THK	Ø P	R SPH RAD
APD0305	.3740	5.00	.87	.500	.250	.3765	.375
APD0307		7.00	1.37				
APD0405	.4990	5.00	.87	.625	.250	.5015	.500
APD0407		7.00	1.37				
APD0410		10.00	1.37				
APD0505	.6240	5.00	.87	.750	.250	.6265	.625
APD0507		7.00	1.37				
APD0510		10.00	1.37				
APD0607	.7490	7.00	1.37	.875	.312	.7515	.750
APD0610		10.00	1.37				
APD0614		14.00	1.37				
APD0807	.9990	7.00	1.37	1.125	.312	1.0015	1.000
APD0810		10.00	1.37				
APD0814		14.00	1.37				

See DME Standard Angle Pin Inserts, pre-machined for 10°, 15° or 20° angles.

Mold Machining and Installation Dimensions

ITEM NUMBER	Ø A*	B	C	Ø D
APD0305 AND APD0307	*.3765	10°	.256	.562
		15°	.264	
		20°	.275	
APD0405 THRU APD0410	*.5015	10°	.258	.688
		15°	.268	
		20°	.283	
APD0505 THRU APD0510	*.6265	10°	.260	.812
		15°	.273	
		20°	.291	
APD0607 THRU APD0614	*.7515	10°	.324	.938
		15°	.339	
		20°	.361	
APD0807 THRU APD0814	*1.0015	10°	.328	1.188
		15°	.348	
		20°	.377	

*Refer to Installation Note #1.

Installation Notes

1. Ø A dimensions specified for hole will provide approximately .000 to .001 clearance with the Ø P or press fit area of the angle pins. Moldmaker to adjust Ø A hole dimensions to obtain specific fit required.
2. Cut angle pin to length as required to achieve desired travel on slide.

   Typically, a spherical radius or cone shape with a spherical radius is machined on end of angle pin (opposite the head).
3. Spherical radius on head is suitable for angles up to and including 20°.

Additional machining and installation data is available. Contact DME.

All items in stock.

HOW TO ORDER: Use Item Numbers in charts for ordering.

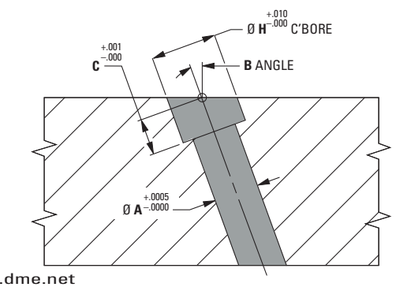

SLIDE ACTION COMPONENTS

Angle Pin Inserts



DME Angle Pin Inserts are pre-machined with 10°, 15° or 20° angle holes and are supplied with a flat machined to facilitate keying to prevent rotation. They are sized to accommodate DME standard angle pins.

- Pre-machined with 10°, 15° or 20° angle hole... eliminates costly angle set-ups and machining
- 51 size/angle combinations to suit most applications

(U.S. Patent No. 5,234,329)

ITEM NUMBER	Ø A HOLE	B	C	Ø D	Ø E	F OFF SET	G	H FLAT
API3101	.3765	10°	.875	.6250	.812	.062	.256	.332
API3102			1.375	.7500	.938	.125		.395
API3103			1.875	.7500	.938	.156		.395
API3151		15°	.875	.7500	.938	.125	.264	.395
API3152			1.375	.8750	1.062	.188		.457
API3153			1.875	1.0000	1.188	.250		.520
API3201		20°	.875	.8750	1.062	.156	.275	.457
API3202			1.375	1.0000	1.188	.250		.520
API3203			1.875	1.2500	1.438	.312		.650
API4101	.5015	10°	.875	.7500	.938	.094	.258	.395
API4102			1.375	.8750	1.062	.125		.457
API4103			1.875	1.0000	1.188	.156		.520
API4151		15°	.875	.8750	1.062	.125	.268	.457
API4152			1.375	1.0000	1.188	.188		.520
API4153			1.875	1.1250	1.312	.250		.582
API4201		20°	.875	1.0000	1.188	.156	.283	.520
API4202			1.375	1.1250	1.312	.250		.582
API4203			1.875	1.3750	1.562	.312		.710
API5101	.6265	10°	.875	.8750	1.062	.062	.260	.457
API5102			1.375	1.0000	1.188	.125		.520
API5103			1.875	1.1250	1.312	.188		.582
API5104			2.375	1.2500	1.438	.219		.650
API5151		15°	.875	1.0000	1.188	.125	.273	.520
API5152			1.375	1.1250	1.312	.188		.582
API5153			1.875	1.2500	1.438	.250		.650
API5154			2.375	1.3750	1.562	.312		.710
API5201		20°	.875	1.1250	1.312	.156	.291	.582
API5202			1.375	1.2500	1.438	.250		.650
API5203			1.875	1.5000	1.688	.344		.770
API5204			2.375	1.6250	1.812	.438		.830

ITEM NUMBER	Ø A HOLE	B	C	Ø D	Ø E	F OFF SET	G	H FLAT
API6102	.7515	10°	1.375	1.1250	1.312	.125	.324	.582
API6103			1.875	1.2500	1.438	.156		.650
API6104			2.375	1.3750	1.562	.188		.710
API6152		15°	1.375	1.2500	1.438	.188	.339	.650
API6153			1.875	1.3750	1.562	.250		.710
API6154			2.375	1.5000	1.688	.312		.770
API6202		20°	1.375	1.3750	1.562	.250	.361	.710
API6203			1.875	1.6250	1.812	.365		.830
API6204			2.375	1.7500	1.938	.438		.890
API8102	1.0015	10°	1.375	1.3750	1.562	.125	.328	.710
API8103			1.875	1.5000	1.688	.188		.770
API8104			2.375	1.6250	1.812	.2119		.830
API8105			2.875	1.7500	1.938	.250		.890
API8152		15°	1.375	1.5000	1.688	.188	.348	.770
API8153			1.875	1.7500	1.938	.250		.890
API8154			2.375	1.8750	2.062	.312		.960
API8155			2.875	2.0000	2.188	.375		1.020
API8202		20°	1.375	1.7500	1.938	.250	.377	.890
API8203			1.875	1.8750	2.062	.344		.960
API8204			2.375	2.0000	2.188	.438		1.020
API8205			2.875	2.2500	2.438	.531		1.145

HOW TO ORDER: Use Item Numbers in charts for ordering.

SLIDE ACTION COMPONENTS

Angle Pin Inserts

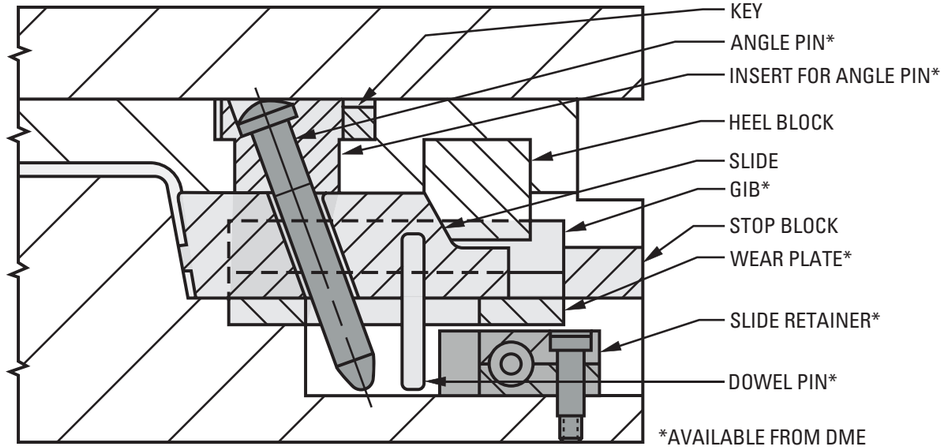

Typical Application

Material: AISI 420 Type Stainless Steel **Hardness:** 32-38 HRC

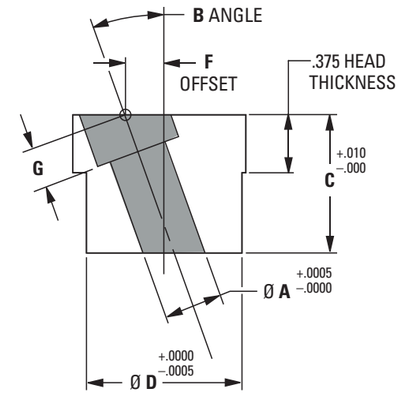

NOTE: Mold machining and installation data is available. Contact DME.



All items in stock.

SLIDE ACTION COMPONENTS

Metric Angle Pins (Guide Pins)

Can be used as angle (CAM) pins or as straight leader pins.



Material: DIN 1.7131 (AISI 5115 Type) Steel
TYPE: APD

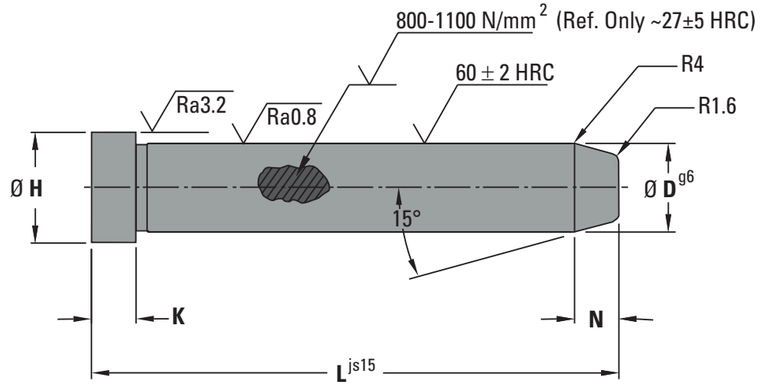

Metric ISO Tolerances

NOMINAL SIZE (MM)		TOLERANCE (MM)													
OVER	TO	G6		H8		K6		M6		H5		H7		J15	
0	3	-.002	-.008	0	-.014	+.006	0	+.008	+.002	+.004	0	+.010	0	+300	
3	6	-.004	-.012	0	-.018	+.009	+.001	+.012	+.004	+.005	0	+.012	0	+375	
6	10	-.005	-.014	0	-.022	+.010	+.001	+.015	+.006	+.006	0	+.015	0	+450	
10	18	-.006	-.017	0	-.027	+.012	+.001	+.018	+.007	+.008	0	+.018	0	+550	
18	30	-.007	-.020	0	-.033	+.015	+.002	+.021	+.008	+.009	0	+.021	0	+650	
30	50	-.009	-.025	0	-.039	+.018	+.002	+.025	+.009	+.011	0	+.025	0	+800	
50	80	-.010	-.029	0	-.046	+.021	+.002	+.030	+.011	+.013	0	+.030	0	+950	
80	120	-.012	-.034	0	-.054	+.025	+.003	+.035	+.013	+.015	0	+.035	0	+1100	
120	180	-.014	-.039	0	-.063	+.028	+.003	+.040	+.015	+.018	0	+.040	0	+1200	

SLIDE ACTION COMPONENTS

Metric Angle Pins (Guide Pins)

ØD	ØH	K	N	L	ITEM NUMBER
10	12	3	5	40	APD1040
				60	APD1060
				80	APD1080
				100	APD10100
				110	APD10110
				120	APD10120
12	16	6	5	40	APD1240
				60	APD1260
				80	APD1280
				100	APD12100
				110	APD12110
				120	APD12120
				140	APD12140
				160	APD12160
14	18	8	6	40	APD1440
				60	APD1460
				80	APD1480
				100	APD14100
				110	APD14110
				120	APD14120
				140	APD14140
				160	APD14160
				180	APD14180
				200	APD14200
				210	APD14210
				220	APD14220
				230	APD14230
16	20	8	7	40	APD1640
				60	APD1660
				80	APD1680
				100	APD16100
				110	APD16110
				120	APD16120
				140	APD16140
				160	APD16160
				180	APD16180
				200	APD16200
				210	APD16210
				220	APD16220
				230	APD16230

ØD	ØH	K	N	L	ITEM NUMBER
18	22	8	8	40	APD1840
				60	APD1860
				80	APD1880
				100	APD18100
				110	APD18110
				120	APD18120
				140	APD18140
				160	APD18160
				180	APD18180
				200	APD18200
				210	APD18210
				220	APD18220
				230	APD18230
20	24	8	8	60	APD2060
				80	APD2080
				100	APD20100
				110	APD20110
				120	APD20120
				140	APD20140
				160	APD20160
				180	APD20180
				200	APD20200
				210	APD20210
				220	APD20220
				230	APD20230
22	26	15	8	80	APD2280
				100	APD22100
				110	APD22110
				120	APD22120
				140	APD22140
				160	APD22160
				180	APD22180
				200	APD22200
				210	APD22210
				220	APD22220
				230	APD22230
24	28	15	8	80	APD2480
				100	APD24100
				110	APD24110
				120	APD24120

ØD	ØH	K	N	L	ITEM NUMBER
24	28	15	8	140	APD24140
				160	APD24160
				180	APD24180
				200	APD24200
				210	APD24210
				220	APD24220
				230	APD24230
				240	APD24240
				270	APD24270
30	34	15	8	180	APD30180
				200	APD30200
				210	APD30210
				220	APD30220
				240	APD30240
				270	APD30270
				300	APD30300
34	38	15	8	100	APD34100
				120	APD34120
				170	APD34170
				190	APD34190
				210	APD34210
				250	APD34250
40	48	15	10	160	APD40160
				200	APD40200
				240	APD40240
				300	APD40300
42	48	15	10	160	APD42160
				200	APD42200
				240	APD42240
				300	APD 42300
50	58	15	10	160	APD50160
				200	APD50200
				240	APD50240
				300	APD50300
				360	APD50360

All items in stock.

HOW TO ORDER: Use Item Numbers in charts for ordering.

Available via

eSTORE
store.milacron.com

SLIDE ACTION COMPONENTS

Bronze-Plated Wear Strips

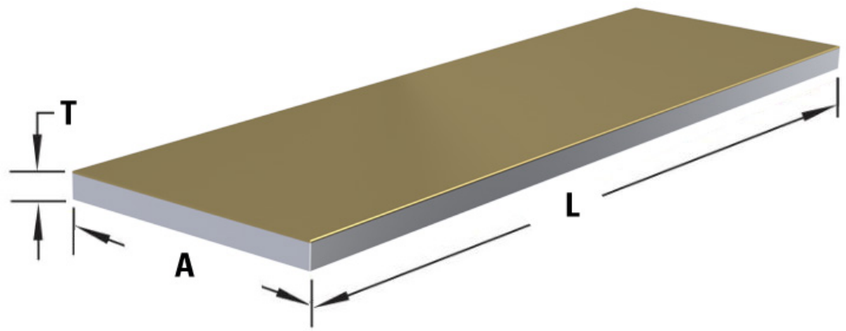

DME Bronze-Plated Wear Strips provide a long-lasting wear surface for molds requiring slides, cams or flat surfaces where friction or movement are a factor. The bronze plating is applied via a sintering process.

- Close tolerance on thickness of +.000/-.002 (before bronze plating)
- Bronze plating is .0.30mm to 0.35 thick
- Easy to machine, saving time and tools
- No pre-drilled holes – allows flexibility in mounting patterns

1/4" Thickness (T)

A WIDTH +.000 -.080	L LENGTH										
	3	4	5	6	7	8	9	10	12	14	48
1.00	WPB0405L3	WPB0405L4	WPB0405L5	WPB0405L6	WPB0405L7	WPB0405L8	WPB0405L9	WPB0405L10	WPB0405L12	WPB0405L14	WPB0405L48
1.25	WPB0406L3	WPB0406L4	WPB0406L5	WPB0406L6	WPB0406L7	WPB0406L8	WPB0406L9	WPB0406L10	WPB0406L12	WPB0406L14	WPB0406L48
1.50	WPB0407L3	WPB0407L4	WPB0407L5	WPB0407L6	WPB0407L7	WPB0407L8	WPB0407L9	WPB0407L10	WPB0407L12	WPB0407L14	WPB0407L48
1.75	WPB0409L3	WPB0409L4	WPB0409L5	WPB0409L6	WPB0409L7	WPB0409L8	WPB0409L9	WPB0409L10	WPB0409L12	WPB0409L14	WPB0409L48
2.00	WPB0410L3	WPB0410L4	WPB0410L5	WPB0410L6	WPB0410L7	WPB0410L8	WPB0410L9	WPB0410L10	WPB0410L12	WPB0410L14	WPB0410L48
2.50	WPB0412L3	WPB0412L4	WPB0412L5	WPB0412L6	WPB0412L7	WPB0412L8	WPB0412L9	WPB0412L10	WPB0412L12	WPB0412L14	WPB0412L48
3.00	WPB0415L3	WPB0415L4	WPB0415L5	WPB0415L6	WPB0415L7	WPB0415L8	WPB0415L9	WPB0415L10	WPB0415L12	WPB0415L14	WPB0415L48
3.50	WPB0417L3	WPB0417L4	WPB0417L5	WPB0417L6	WPB0417L7	WPB0417L8	WPB0417L9	WPB0417L10	WPB0417L12	WPB0417L14	WPB0417L48
4.00	WPB0420L3	WPB0420L4	WPB0420L5	WPB0420L6	WPB0420L7	WPB0420L8	WPB0420L9	WPB0420L10	WPB0420L12	WPB0420L14	WPB0420L48
4.50	WPB0422L3	WPB0422L4	WPB0422L5	WPB0422L6	WPB0422L7	WPB0422L8	WPB0422L9	WPB0422L10	WPB0422L12	WPB0422L14	WPB0422L48
5.00	WPB0425L3	WPB0425L4	WPB0425L5	WPB0425L6	WPB0425L7	WPB0425L8	WPB0425L9	WPB0425L10	WPB0425L12	WPB0425L14	WPB0425L48
6.00	WPB0430L3	WPB0430L4	WPB0430L5	WPB0430L6	WPB0430L7	WPB0430L8	WPB0430L9	WPB0430L10	WPB0430L12	WPB0430L14	WPB0430L48
8.00	WPB0440L3	WPB0440L4	WPB0440L5	WPB0440L6	WPB0440L7	WPB0440L8	WPB0440L9	WPB0440L10	WPB0440L12	WPB0440L14	WPB0440L48
10.00	WPB0450L3	WPB0450L4	WPB0450L5	WPB0450L6	WPB0450L7	WPB0450L8	WPB0450L9	WPB0450L10	WPB0450L12	WPB0450L14	WPB0450L48

SLIDE ACTION COMPONENTS

Bronze-Plated Wear Strips

3/8" Thickness (T)

A WIDTH +.000 -.080	L LENGTH										
	3	4	5	6	7	8	9	10	12	14	48
1.75	WPB0609L3	WPB0609L4	WPB0609L5	WPB0609L6	WPB0609L7	WPB0609L8	WPB0609L9	WPB0609L10	WPB0609L12	WPB0609L14	WPB0609L48
2.00	WPB0610L3	WPB0610L4	WPB0610L5	WPB0610L6	WPB0610L7	WPB0610L8	WPB0610L9	WPB0610L10	WPB0610L12	WPB0610L14	WPB0610L48
2.50	WPB0612L3	WPB0612L4	WPB0612L5	WPB0612L6	WPB0612L7	WPB0612L8	WPB0612L9	WPB0612L10	WPB0612L12	WPB0612L14	WPB0612L48
3.00	WPB0615L3	WPB0615L4	WPB0615L5	WPB0615L6	WPB0615L7	WPB0615L8	WPB0615L9	WPB0615L10	WPB0615L12	WPB0615L14	WPB0615L48
3.50	WPB0617L3	WPB0617L4	WPB0617L5	WPB0617L6	WPB0617L7	WPB0617L8	WPB0617L9	WPB0617L10	WPB0617L12	WPB0617L14	WPB0617L48
4.00	WPB0620L3	WPB0620L4	WPB0620L5	WPB0620L6	WPB0620L7	WPB0620L8	WPB0620L9	WPB0620L10	WPB0620L12	WPB0620L14	WPB0620L48
4.50	WPB0622L3	WPB0622L4	WPB0622L5	WPB0622L6	WPB0622L7	WPB0622L8	WPB0622L9	WPB0622L10	WPB0622L12	WPB0622L14	WPB0622L48
5.00	WPB0625L3	WPB0625L4	WPB0625L5	WPB0625L6	WPB0625L7	WPB0625L8	WPB0625L9	WPB0625L10	WPB0625L12	WPB0625L14	WPB0625L48
6.00	WPB0630L3	WPB0630L4	WPB0630L5	WPB0630L6	WPB0630L7	WPB0630L8	WPB0630L9	WPB0630L10	WPB0630L12	WPB0630L14	WPB0630L48
8.00	WPB0640L3	WPB0640L4	WPB0640L5	WPB0640L6	WPB0640L7	WPB0640L8	WPB0640L9	WPB0640L10	WPB0640L12	WPB0640L14	WPB0640L48

1/2" Thickness (T)

A WIDTH +.000 -.080	L LENGTH										
	3	4	5	6	7	8	9	10	12	14	48
1.00	WPB0805L3	WPB0805L4	WPB0805L5	WPB0805L6	WPB0805L7	WPB0805L8	WPB0805L9	WPB0805L10	WPB0805L12	WPB0805L14	WPB0805L48
1.75	WPB0809L3	WPB0809L4	WPB0809L5	WPB0809L6	WPB0809L7	WPB0809L8	WPB0809L9	WPB0809L10	WPB0809L12	WPB0809L14	WPB0809L48
2.50	WPB0812L3	WPB0812L4	WPB0812L5	WPB0812L6	WPB0812L7	WPB0812L8	WPB0812L9	WPB0812L10	WPB0812L12	WPB0812L14	WPB0812L48
3.00	WPB0815L3	WPB0815L4	WPB0815L5	WPB0815L6	WPB0815L7	WPB0815L8	WPB0815L9	WPB0815L10	WPB0815L12	WPB0815L14	WPB0815L48
3.50	WPB0817L3	WPB0817L4	WPB0817L5	WPB0817L6	WPB0817L7	WPB0817L8	WPB0817L9	WPB0817L10	WPB0817L12	WPB0817L14	WPB0817L48
4.00	WPB0820L3	WPB0820L4	WPB0820L5	WPB0820L6	WPB0820L7	WPB0820L8	WPB0820L9	WPB0820L10	WPB0820L12	WPB0820L14	WPB0820L48
4.50	WPB0822L3	WPB0822L4	WPB0822L5	WPB0822L6	WPB0822L7	WPB0822L8	WPB0822L9	WPB0822L10	WPB0822L12	WPB0822L14	WPB0822L48
6.00	WPB0830L3	WPB0830L4	WPB0830L5	WPB0830L6	WPB0830L7	WPB0830L8	WPB0830L9	WPB0830L10	WPB0830L12	WPB0830L14	WPB0830L48
8.00	WPB0840L3	WPB0840L4	WPB0840L5	WPB0840L6	WPB0840L7	WPB0840L8	WPB0840L9	WPB0840L10	WPB0840L12	WPB0840L14	WPB0840L48
10.00	WPB0850L3	WPB0850L4	WPB0850L5	WPB0850L6	WPB0850L7	WPB0850L8	WPB0850L9	WPB0850L10	WPB0850L12	WPB0850L14	WPB0850L48

SLIDE ACTION COMPONENTS

Bronze-Plated Wear Plates – WPM Metric



Metric Wear Plate is no longer available.

Please see previous page for Imperial Wear Plate options.

DME Bronze-Plated Wear Plates provide a long-lasting wear surface for Bronze-Plated molds requiring slides, cams or flat surfaces where frictional wear is a factor.

- In order to be flat this material must be fastened to a flat surface
- Parallel 0.025in. (0.635mm) within 47.992in. (1219mm)
- Thickness of bronze: 0.20in. to 0.25in. (5.08mm to 6.35mm)
- Milled edges

Standard wear strips are plated on one side only. Up to four sides can be plated, call DME for a cost quotation.

NOTE:

Machining may cause distortion which can result in the loss of flatness of the part. Once altered, DME will not replace wear strips.

DME offers custom wear strips that meet your application needs. Please send your prints to DME@dme.net to receive a cost quotation.

SLIDE ACTION COMPONENTS

ITEM NUMBER BY 1 IN. (25.4mm)	T THICKNESS +0.0 –0.051	W WIDTH +0.0 –2.032
WPM0405	4mm	25mm
WPM0420		100mm
WPM0505	5mm	25mm
WPM0506		30mm
WPM0515		75mm
WPM0520		100mm
WPM0608	6mm	40mm
WPM0610		50mm
WPM0612		60mm
WPM0805	8mm	25mm
WPM0812		60mm
WPM0815		75mm

ITEM NUMBER BY 1 IN. (25.4mm)	T THICKNESS +0.0 –0.051	W WIDTH +0.0 –2.032
WPM1005	10mm	25mm
WPM1006		30mm
WPM1007		35mm
WPM1008		40mm
WPM1010		50mm
WPM1020		100mm
WPM1215	12mm	75mm
WPM1220		100mm
WPM1575	15mm	75mm
WPM1520		100mm
WPM1525		125mm
WPM1530		150mm
WPM2020	20mm	100mm
WPM2505	25mm	25mm
WPM2520		100mm

Metric Wear Plate is no longer available.

Please see previous page for Imperial Wear Plate options.

NOTE:

Wear Plate lengths are available in 1in. (25.4mm) increments.

Minimum cut length is 3in. (76.2mm.)

SLIDE ACTION COMPONENTS

Self-Lubricating Wear Plates

Self-Lubricating Wear Plates – SLP

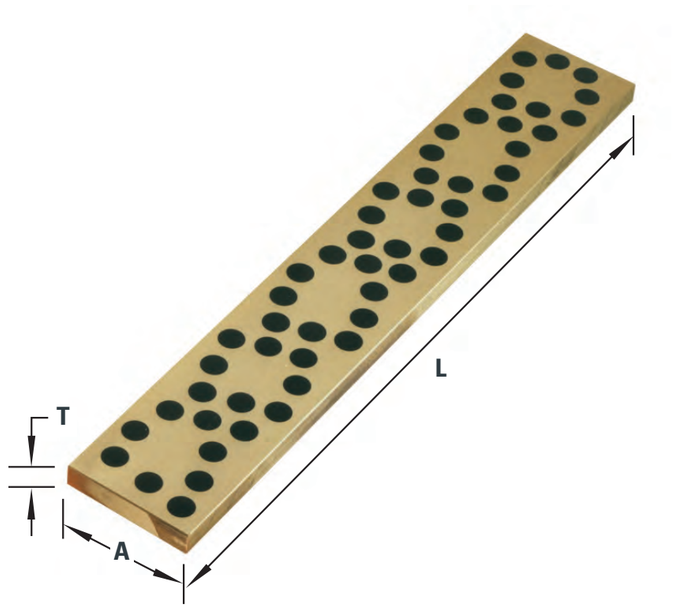

Material: Aluminum Bronze with Graphite Plugs **Hardness:** 179 Bhn

DME Self-Lubricating Wear Plates provide a long-lasting wear surface for molds requiring slides, cams or flat surfaces where frictional wear is a factor.

- Low coefficient of friction
- No pre-drilled holes – allows flexibility in mounting patterns
- Standard plug pattern designed for maximum surface lubrication
- Close tolerance to ease installation

T THICKNESS 1/4 (.250 ±.001)		
ITEM NUMBER	A WIDTH	L LENGTH
SLP0404	1.00	4.00
SLP0405	1.00	5.00
SLP0406	1.00	6.00
SLP0408	1.00	8.00
SLP0410	1.00	10.00
SLP0412	1.00	12.00
SLP0414	1.50	4.00
SLP0415	1.50	5.00
SLP0416	1.50	6.00
SLP0418	1.50	8.00
SLP0420	1.50	10.00
SLP0422	1.50	12.00
SLP0424	2.00	4.00
SLP0425	2.00	5.00
SLP0426	2.00	6.00
SLP0428	2.00	8.00
SLP0430	2.00	10.00
SLP0432	2.00	12.00
SLP0434	2.50	4.00
SLP0435	2.50	5.00
SLP0436	2.50	6.00
SLP0438	2.50	8.00
SLP0440	2.50	10.00
SLP0442	2.50	12.00
SLP0444	3.00	4.00
SLP0445	3.00	5.00
SLP0446	3.00	6.00
SLP0448	3.00	8.00
SLP0450	3.00	10.00
SLP0452	3.00	12.00
SLP0454	4.00	4.00
SLP0455	4.00	5.00
SLP0456	4.00	6.00
SLP0458	4.00	8.00
SLP0460	4.00	10.00
SLP0462	4.00	12.00

DME

SLIDE ACTION COMPONENTS

Self-Lubricating Wear Plates

T THICKNESS 3/8 (.375 ±.001)		
ITEM NUMBER	A WIDTH	L LENGTH
SLP0504	1.00	4.00
SLP0505	1.00	5.00
SLP0506	1.00	6.00
SLP0508	1.00	8.00
SLP0510	1.00	10.00
SLP0512	1.00	12.00
SLP0514	1.50	4.00
SLP0515	1.50	5.00
SLP0516	1.50	6.00
SLP0518	1.50	8.00
SLP0520	1.50	10.00
SLP0522	1.50	12.00
SLP0524	2.00	4.00
SLP0525	2.00	5.00
SLP0526	2.00	6.00
SLP0528	2.00	8.00
SLP0530	2.00	10.00
SLP0532	2.00	12.00
SLP0534	2.50	4.00
SLP0535	2.50	5.00
SLP0536	2.50	6.00
SLP0538	2.50	8.00
SLP0540	2.50	10.00
SLP0542	2.50	12.00
SLP0544	3.00	4.00
SLP0545	3.00	5.00
SLP0546	3.00	6.00
SLP0548	3.00	8.00
SLP0550	3.00	10.00
SLP0552	3.00	12.00
SLP0554	4.00	4.00
SLP0555	4.00	5.00
SLP0556	4.00	6.00
SLP0558	4.00	8.00
SLP0560	4.00	10.00
SLP0562	4.00	12.00

T THICKNESS 1/2 (.500 ±.001)		
ITEM NUMBER	A WIDTH	L LENGTH
SLP0603	1.50	3.00
SLP0604	1.50	4.00
SLP0605	1.50	5.00
SLP0606	1.50	6.00
SLP0608	1.50	8.00
SLP0610	1.50	10.00
SLP0612	1.50	12.00
SLP0613	2.00	3.00
SLP0614	2.00	4.00
SLP0615	2.00	5.00
SLP0616	2.00	6.00
SLP0618	2.00	8.00
SLP0620	2.00	10.00
SLP0622	2.00	12.00
SLP0623	2.50	3.00
SLP0624	2.50	4.00
SLP0625	2.50	5.00
SLP0626	2.50	6.00
SLP0628	2.50	8.00
SLP0630	2.50	10.00
SLP0632	2.50	12.00
SLP0633	3.00	3.00
SLP0634	3.00	4.00
SLP0635	3.00	5.00
SLP0636	3.00	6.00
SLP0638	3.00	8.00
SLP0640	3.00	10.00
SLP0642	3.00	12.00
SLP0654	4.00	4.00
SLP0655	4.00	5.00
SLP0656	4.00	6.00
SLP0658	4.00	8.00
SLP0660	4.00	10.00
SLP0662	4.00	12.00

T THICKNESS 5/8 (.625 ±.001)		
ITEM NUMBER	A WIDTH	L LENGTH
SLP0703	1.50	3.00
SLP0704	1.50	4.00
SLP0705	1.50	5.00
SLP0706	1.50	6.00
SLP0708	1.50	8.00
SLP0710	1.50	10.00
SLP0712	1.50	12.00
SLP0723	2.00	3.00
SLP0724	2.00	4.00
SLP0725	2.00	5.00
SLP0726	2.00	6.00
SLP0728	2.00	8.00
SLP0730	2.00	10.00
SLP0732	2.00	12.00
SLP0733	2.50	3.00
SLP0734	2.50	4.00
SLP0735	2.50	5.00
SLP0736	2.50	6.00
SLP0738	2.50	8.00
SLP0740	2.50	10.00
SLP0742	2.50	12.00
SLP0743	3.00	3.00
SLP0744	3.00	4.00
SLP0745	3.00	5.00
SLP0746	3.00	6.00
SLP0748	3.00	8.00
SLP0750	3.00	10.00
SLP0752	3.00	12.00
SLP0754	4.00	4.00
SLP0755	4.00	5.00
SLP0756	4.00	6.00
SLP0758	4.00	8.00
SLP0760	4.00	10.00
SLP0762	4.00	12.00

All items in stock.

HOW TO ORDER: Use Item Numbers in charts for ordering.

SLIDE ACTION COMPONENTS

Self-Lubricating Wear Ways

Self-Lubricating Wear Ways – SLW

- Well-suited for custom applications
- Standard plug pattern facilitates cutting to a variety of lengths
- No pre-drilled holes – allows flexibility in mounting patterns



Material: Aluminum Bronze with Graphite Plugs
Hardness: 179 Bhn

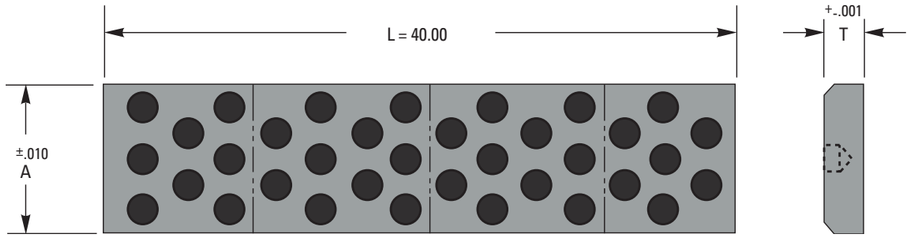

NOTE: All DME Self-Lubricating Wear Ways are supplied in 40" lengths.

DME Self-Lubricating Wear Ways are supplied in 40-inch lengths. The plug pattern is consistent throughout the surface of the Wear Way, so that the Wear Way may be cut to a variety of lengths. Mounting holes are not supplied so that they may be drilled to suit custom applications.

Typical mounting procedure is to machine out the plug location to use for mounting screws. (See "Suggestions for Fastening" below.)

DME

SLIDE ACTION COMPONENTS

Self-Lubricating Wear Ways

Suggestions for Fastening

Typical mounting procedure is to use plug location for screw location.

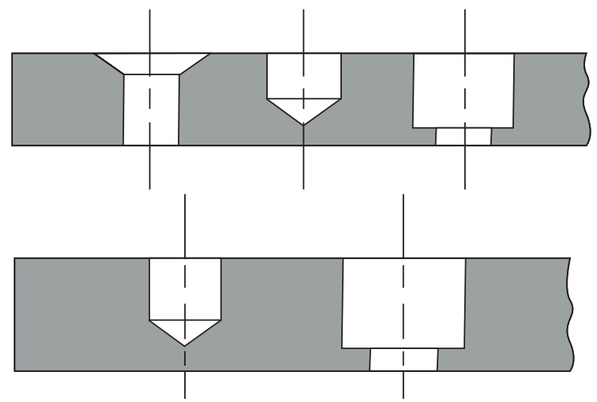

NOTE: For 3⁄8" thicknesses, the suggested screw is a 1⁄4 flathead screw (or 1⁄4 socket head screw max).

NOTE: For 1⁄2", 5⁄8", 3⁄4" thicknesses, the suggested screw is a 3⁄8 socket head screw max.

ITEM NUMBER	T THICKNESS	A WIDTH
SLW0515	.375	1.50
SLW0520	.375	2.00
SLW0525	.375	2.50
SLW0530	.375	3.00
SLW0615	.500	1.50
SLW0620	.500	2.00
SLW0625	.500	2.50
SLW0630	.500	3.00
SLW0640	.500	4.00

ITEM NUMBER	T THICKNESS	A WIDTH
SLW0720	.625	2.00
SLW0730	.625	3.00
SLW0740	.625	4.00
SLW0820	.750	2.00
SLW0830	.750	3.00
SLW0840	.750	4.00
SLW0850	.750	5.00

All items in stock.

WHEN ORDERING, PLEASE SPECIFY:

1. Item Numbers from charts

2. Quantity

3. Method of shipment

SLIDE ACTION COMPONENTS

Self-Lubricating Gib Assemblies

Self-Lubricating Gib Assemblies – SLA

Material: Aluminum Bronze with Graphite Plugs
Hardness: 179 Bhn



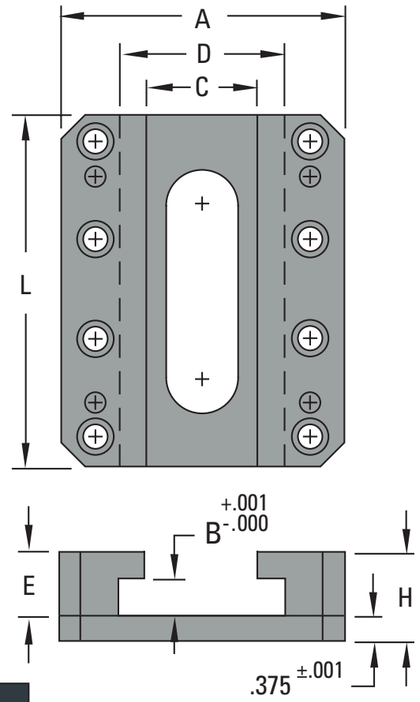

- Standardized assembly
- Wide variety of applications
- Easily installed in pre-machined pocket
- Reduces design and assembly time

ITEM NUMBER	H	A	L	B	C	D	E
SLA1001	1.12	2.62	2.00	.312	1.12	1.50	.75
SLA1002	1.12	2.62	3.00	.312	1.12	1.50	.75
SLA1003	1.12	2.62	4.00	.312	1.12	1.50	.75
SLA2001	1.12	3.12	3.00	.375	1.12	1.62	.75
SLA2002	1.12	3.12	4.00	.375	1.12	1.62	.75
SLA2003	1.12	3.12	5.00	.375	1.12	1.62	.75
SLA3001	1.25	4.12	3.00	.500	1.62	2.36	.88
SLA3002	1.25	4.12	4.00	.500	1.62	2.36	.88
SLA3003	1.25	4.12	5.00	.500	1.62	2.36	.88
SLA3004	1.25	4.12	6.00	.500	1.62	2.36	.88
SLA4001	1.62	4.62	4.00	.750	1.62	2.62	1.25
SLA4002	1.62	4.62	5.00	.750	1.62	2.62	1.25
SLA4003	1.62	4.62	6.00	.750	1.62	2.62	1.25

SLIDE ACTION COMPONENTS

Base Plates for Assemblies



The Gib Assembly includes three components: two L-Gibs and a Base Plate. The L-Gibs are provided with screw holes and are spot-drilled for dowels; the Base Plate includes thru holes to allow for easy assembly.

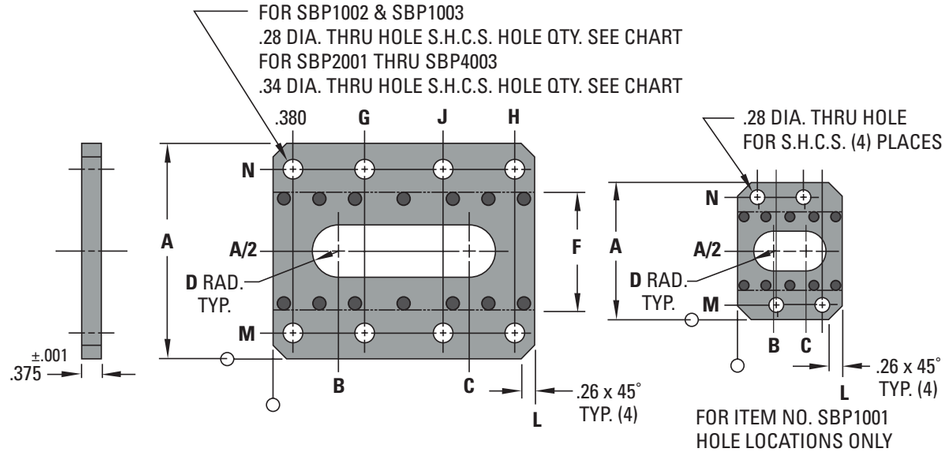

Base Plates for Gib Assemblies – SBP

Material: Aluminum Bronze with Graphite Plugs **Hardness:** 179 Bhn

ITEM NUMBER	A	L	B	C	D	F	G	H	J	M	N	MOUNTING HOLE QTY
SBP1001	2.620	2.00	.69	1.31	.38	1.50	.740	1.62	1.260	.280	2.340	4
SBP1002	2.620	3.00	.88	2.12	.38	1.50	—	2.620	—	.280	2.340	4
SBP1003	2.620	4.00	1.00	3.00	.38	1.50	2.000	3.620	—	.280	2.340	6
SBP2001	3.120	3.00	.88	2.12	.38	1.68	—	2.620	—	.370	2.750	4
SBP2002	3.120	4.00	1.00	3.00	.38	1.68	2.000	3.620	—	.370	2.750	6
SBP2003	3.120	5.00	1.12	3.88	.38	1.68	2.500	4.620	—	.370	2.750	6
SBP3001	4.120	3.00	1.00	2.00	.50	2.25	—	2.620	—	.495	3.625	4
SBP3002	4.120	4.00	1.12	2.88	.50	2.25	2.000	3.620	—	.495	3.625	6
SBP3003	4.120	5.00	1.25	3.75	.50	2.25	2.500	4.620	—	.495	3.625	6
SBP3004	4.120	6.00	1.50	4.50	.50	2.25	2.000	5.620	4.000	.495	3.625	8
SBP4001	4.620	4.00	1.12	2.88	.50	2.41	2.000	3.620	—	.560	4.060	6
SBP4002	4.620	5.00	1.25	3.75	.50	2.41	2.500	4.620	—	.560	4.060	6
SBP4003	4.620	6.00	1.50	4.50	.50	2.41	2.000	5.620	4.000	.560	4.060	8

NOTES:

1. Tolerances not noted are ±.010, Hole locations are ±.005.
2. Graphic plug pattern varies by product size.

All items in stock.

WHEN ORDERING, PLEASE SPECIFY:

1. Item Numbers from charts

2. Quantity

3. Method of shipment

SLIDE ACTION COMPONENTS

L-Gibs for Gib Assemblies



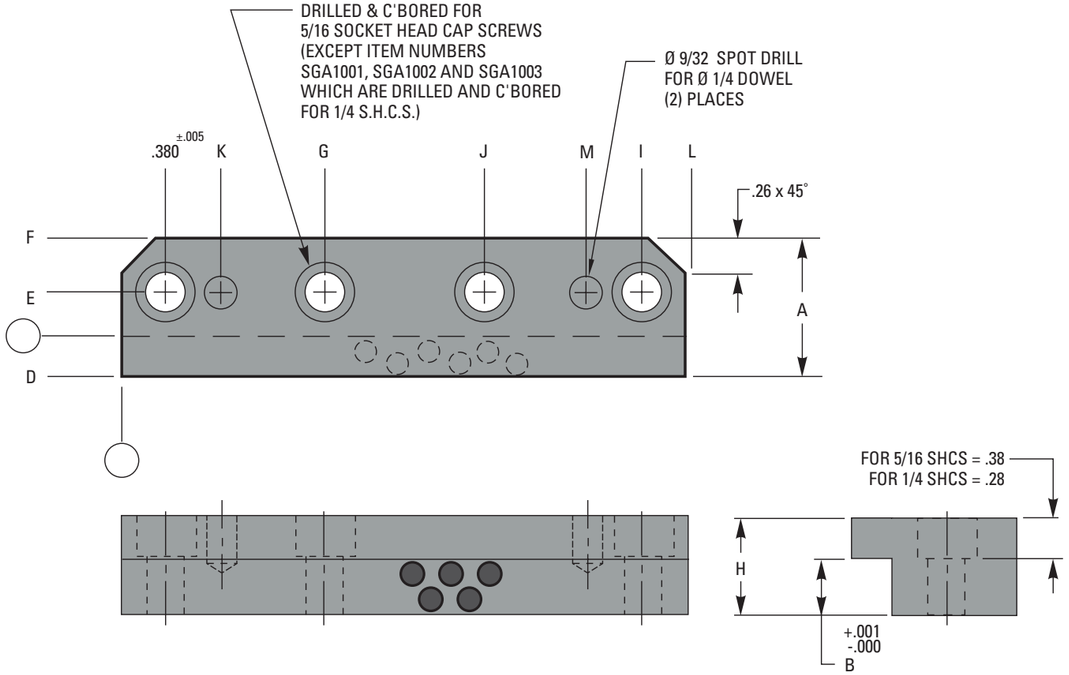

NOTES:

1. Tolerances not noted are ±.010, Hole locations are ±.005.
2. Graphic plug pattern varies by product size.

SLIDE ACTION COMPONENTS

L-Gibs for Gib Assemblies

Material: Aluminum Bronze with Graphite Plugs **Hardness:** 179 Bhn

ITEM NUMBER	H	A	L	B	D	E	F	G	I	J	K	M	MOUNTING HOLE QTY
SGA1001	.75	.750	2.00	.312	.188	.28	.56	—	—	1.26	.79	1.74	2
SGA1002	.75	.750	3.00	.312	.188	.28	.56	—	2.620	—	.88	2.12	2
SGA1003	.75	.750	4.00	.312	.188	.28	.56	2.00	3.620	—	.88	3.12	3
SGA2001	.75	1.000	3.00	.375	.250	.38	.75	—	2.620	—	.88	2.12	2
SGA2002	.75	1.000	4.00	.375	.250	.38	.75	2.00	3.620	—	.88	3.12	3
SGA2003	.75	1.000	5.00	.375	.250	.38	.75	2.50	4.620	—	.88	4.12	3
SGA3001	.88	1.250	3.00	.500	.375	.38	.88	—	2.620	—	.88	2.12	2
SGA3002	.88	1.250	4.00	.500	.375	.38	.88	2.00	3.620	—	.88	3.12	3
SGA3003	.88	1.250	5.00	.500	.375	.38	.88	2.50	4.620	—	.88	4.12	3
SGA3004	.88	1.250	6.00	.500	.375	.38	.88	2.00	5.620	4.000	.88	5.12	4
SGA4001	1.25	1.500	4.00	.750	.500	.44	1.00	2.00	3.620	—	.88	3.12	3
SGA4002	1.25	1.500	5.00	.750	.500	.44	1.00	2.50	4.620	—	.88	4.12	3
SGA4003	1.25	1.500	6.00	.750	.500	.44	1.00	2.00	5.620	4.000	.88	5.12	4

All items in stock.

WHEN ORDERING PLEASE SPECIFY:
1. Item Numbers from charts
2. Quantity
3. Method of shipment

DME Industrial Supplies has tens of thousands of products to fill your MRO needs.

- Equipment - conveyors, loaders, dryers, dumpers, hoppers, storage bins, MoldVac
- Machine Parts - feed screws, barrels,mixing nozzles, nozzle filters, nozzle tips, rupture disks
- Tooling Supplies - quick ejector tie-in systems, swivel lifting shackles, hoist rings & magnets
- Shop Supplies - hand tools, brushes, fans, files, pry bars, cleaning pads, desiccant
- Cooling Products - flowmeters & regulators, manifolds, sockets & plugs, elbows, hose
- Temperature & Voltage Control - mold & cable checkers, heater bands, temperature controllers
- Cutters & Trimmers - gate cutters (hand, heated & pneumatic), deburring tools, knives
- Releases, Lubricants & Adhesives - SLIDE releases & cleaners, diamond compound, sealants
- Safety Supplies - gloves, glasses, ear plugs, spill control socks, pillows & wipes, hand cleaners

U.S. 800-626-6653 ▪ Canada 800-387-6600 www.dme.net ▪ store.dme.net

SLIDE ACTION COMPONENTS

Bronze-Plated L-Gibs |

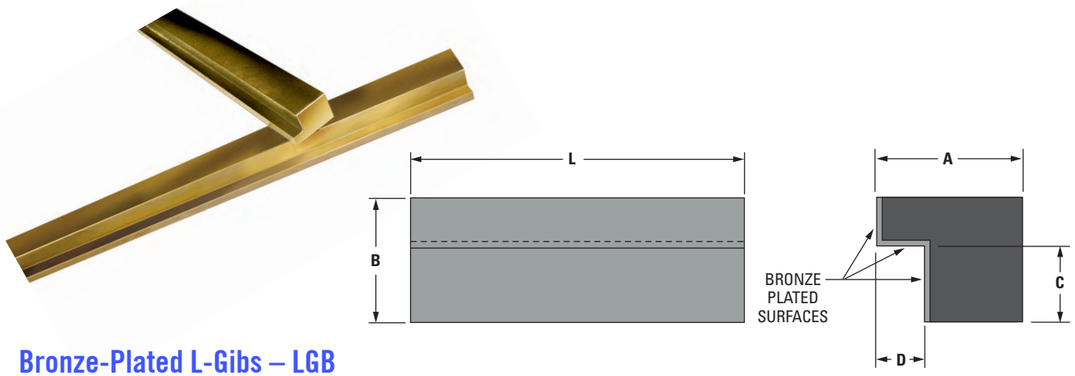

Bronze-Plated L-Gibs – LGB

ITEM NUMBER	A WIDTH	B HEIGHT	C +.001 –.000	D +.001 –.000	L LENGTH	APPROX WEIGHT (LBS)
LGB1001	.750	.485	.3125	.1875	8.75	0.75
LGB2001	1.000	.610	.375	.250	10.00	1.50
LGB3001	1.250	.860	.500	.375	12.50	3.20
LGB4001	1.500	1.235	.750	.500	15.00	6.30
LGB5001	2.000	1.470	.875	.625	24.00	16.25
LGB6001	2.500	1.970	1.250	.750	32.00	36.25
LGB7001	3.000	2.470	1.500	1.000	48.00	80.50

Typical Applications of L-Gibs and Wear Plates

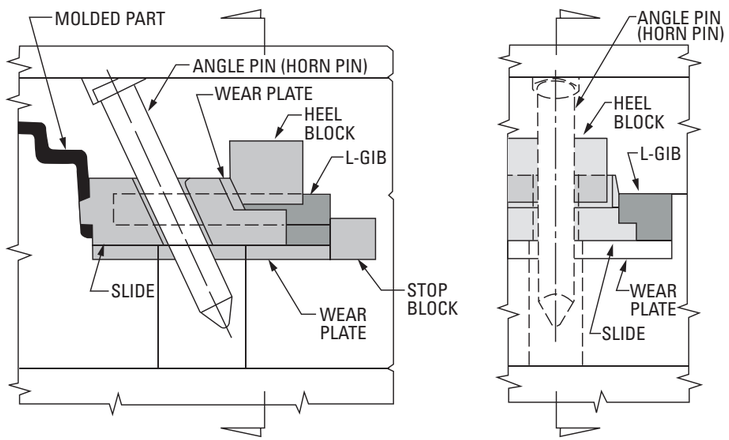

SLIDE ACTION COMPONENTS

Self-Lubricating L-Gibs

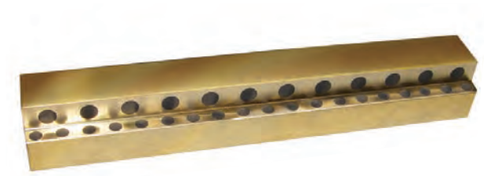

- Low coefficient of friction
- No pre-drilled holes – allows flexibility in mounting patterns
- Close tolerance

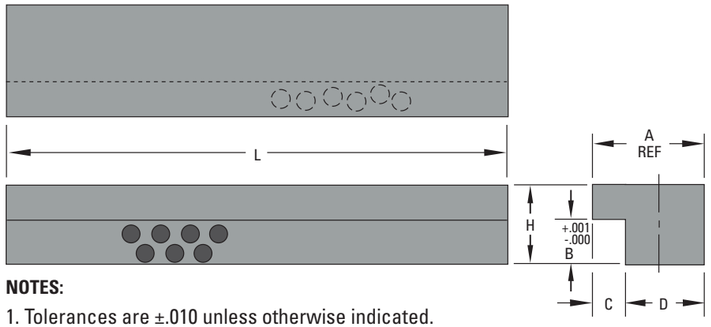

NOTES:

1. Tolerances are ±.010 unless otherwise indicated.
2. Graphic plug pattern varies by product size.

DME Self-Lubricating L-Gibs provide a long-lasting wear surface for high-production molds using slides and cams. L-Gibs are easy to machine and can be shaped to any configuration, requiring no special tools.

They are supplied with no pre-drilled holes, providing the designer with flexibility in mounting patterns. This allows the designer to work around water lines and other components in the mold.

Self-Lubricating L-Gibs – SLG

Material: Aluminum Bronze with Graphite Plugs
Hardness: 179 Bhn

ITEM NUMBER	H	A	L	B	C	D
SLG1001	.75	.75	5.25	.312	.187	.56
SLG1002	.75	.75	7.00	.312	.187	.56
SLG1003	.75	.75	8.75	.312	.187	.56
SLG2001	.75	1.00	6.00	.375	.250	.75
SLG2002	.75	1.00	8.00	.375	.250	.75
SLG2003	.75	1.00	10.00	.375	.250	.75
SLG3001	.88	1.25	6.00	.500	.375	.88
SLG3002	.88	1.25	7.50	.500	.375	.88
SLG3003	.88	1.25	10.00	.500	.375	.88
SLG3004	.88	1.25	12.50	.500	.375	.88
SLG4001	1.25	1.50	6.00	.750	.500	1.00
SLG4002	1.25	1.50	9.00	.750	.500	1.00
SLG4003	1.25	1.50	12.00	.750	.500	1.00
SLG4004	1.25	1.50	15.00	.750	.500	1.00

ITEM NUMBER	H	A	L	B	C	D
SLG5001	1.50	2.00	8.00	.875	.625	1.37
SLG5002	1.50	2.00	12.00	.875	.625	1.37
SLG5003	1.50	2.00	16.00	.875	.625	1.37
SLG6001	2.00	2.50	12.00	1.25	.750	1.75
SLG6002	2.00	2.50	18.00	1.25	.750	1.75
SLG6003	2.00	2.50	24.00	1.25	.750	1.75
SLG7001	2.50	3.00	12.00	1.50	1.000	2.00
SLG7002	2.50	3.00	18.00	1.50	1.000	2.00
SLG7003	2.50	3.00	24.00	1.50	1.000	2.00

All items in stock.

WHEN ORDERING, PLEASE SPECIFY:
1. Item Numbers from charts
2. Quantity
3. Method of shipment

SLIDE ACTION COMPONENTS

Self-Lubricating L-Gibs – Metric

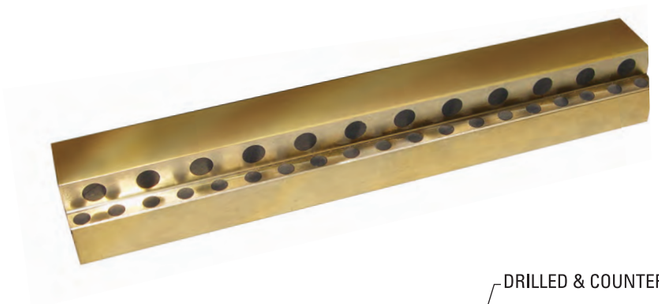

- Plastics injection molds
- Special machines
- Press gibbing
- Special slide applications

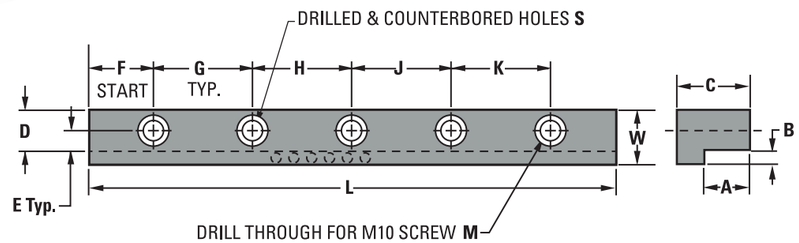

DME Self-Lubricating L-Gibs provide a long-lasting wear surface for high-production molds using slides and cams. L-Gibs are easy to machine and can be shaped to any configuration, requiring no special tools.

Self-Lubricating L-Gibs – Metric

L-GIBS – METRIC – SOLID BRONZE – SELF-LUBRICATING															
ITEM NUMBER	L	W	A	B	C	D	E	F	G	H	J	K	QUANTITY		M & S SIZE
		+0.00–0.13	+0.025 –0.000	+0.025 –0.000	+0.00–0.13			±0.127					M	S	
SLGM15100	100	32	15	10	30	22	11	20	–	–	–	60	2	–	M10
SLGM15150	150								–	55	–	55	3	–	
SLGM15200	200								55	–	50	55	4	–	
SLGM15250	250								70	–	70	70	4	–	
SLGM25200	200	50	25	22	45	28	14		55	–	50	55	–	4	
SLGM25250	250								70	–	70	70	–	4	
SLGM25300	300								65	65	65	65	–	5	
SLGM25350	350								80	75	75	80	–	5	

NOTES:

1. Tolerances are ±.010 unless otherwise indicated.
2. Graphic plug pattern varies by product size.

WHEN ORDERING, PLEASE SPECIFY:

1. Item Numbers from tables
2. Quantity
3. Method of shipment

SLIDE ACTION COMPONENTS

Self-Lubricating Square Gibs

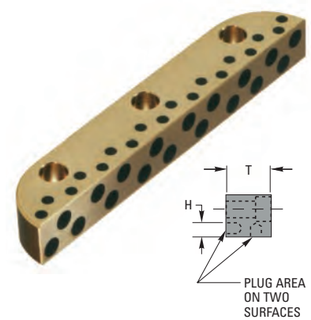

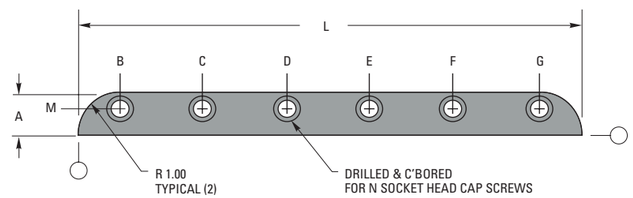

NOTES:

1. Tolerances are ±.010 unless otherwise indicated.
2. Graphic plug pattern varies by product size.

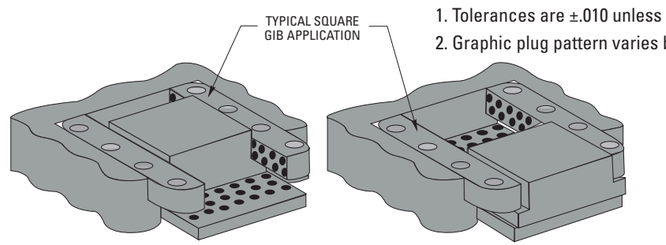

Self-Lubricating Square Gibs – SSG

Material: Aluminum Bronze with Graphite Plugs **Hardness:** 179 Bhn

ITEM NUMBER	T	A	L	B	C	D	E	F	G	H	M	N
SSG1001	.750	1.00	4.00	1.00	3.00	—	—	—	—	.39	.625	3/8
SSG1002	.750	1.00	5.00	1.00	2.50	4.00	—	—	—	.39	.625	3/8
SSG1003	.750	1.00	6.00	1.00	3.00	5.00	—	—	—	.39	.625	3/8
SSG1004	.750	1.00	8.00	1.00	3.00	5.00	7.00	—	—	.39	.625	3/8
SSG1005	.750	1.00	10.00	1.00	3.00	5.00	7.00	9.00	—	.39	.625	3/8
SSG1006	.750	1.00	12.00	1.00	3.00	5.00	7.00	9.00	11.00	.39	.625	3/8
SSG2001	1.00	1.25	4.00	1.00	3.00	—	—	—	—	.62	.875	3/8
SSG2002	1.00	1.25	5.00	1.00	2.50	4.00	—	—	—	.62	.875	3/8
SSG2003	1.00	1.25	6.00	1.00	3.00	5.00	—	—	—	.62	.875	3/8
SSG2004	1.00	1.25	8.00	1.00	3.00	5.00	7.00	—	—	.62	.875	3/8
SSG2005	1.00	1.25	10.00	1.00	3.00	5.00	7.00	9.00	—	.62	.875	3/8
SSG2006	1.00	1.25	12.00	1.00	3.00	5.00	7.00	8.00	11.00	.62	.875	3/8
SSG3001	1.50	2.00	8.00	1.50	4.00	6.50	—	—	—	.86	1.25	5/8
SSG3002	1.50	2.00	10.00	1.25	3.75	6.25	8.75	—	—	.86	1.25	5/8
SSG3003	1.50	2.00	12.00	1.50	4.50	7.50	10.50	—	—	.86	1.25	5/8

WHEN ORDERING, PLEASE SPECIFY:

1. Item Numbers from charts
2. Quantity
3. Method of shipment

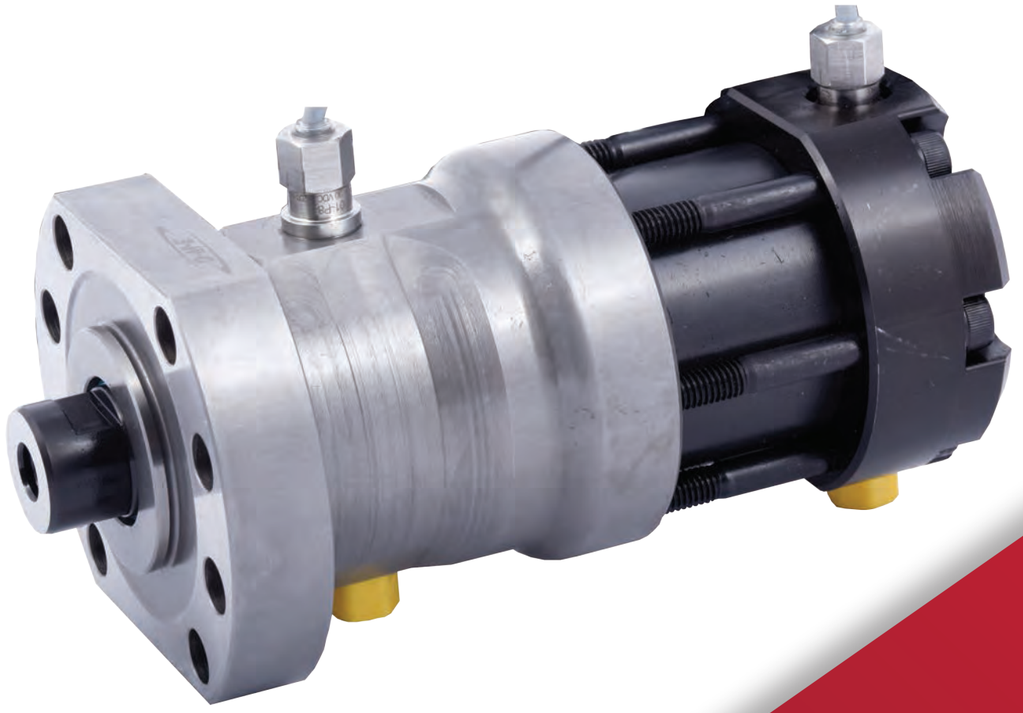

DME HYDRAULIC LOCKING CORE PULL CYLINDERS FOR PLASTICS AND DIE CAST TOOLS

ENABLING COST-SAVING MOVEMENT OF SLIDING CORES

HYDRAULIC LOCKING CORE PULL CYLINDERS

Benefits, Cost Savings and Product Overview

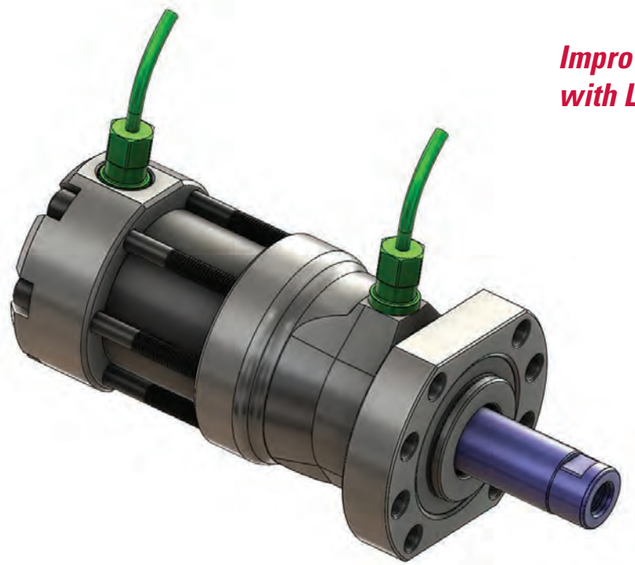

Improved sensor design with LED indicator

Product Benefits

- Withstands high loads
- Large locking surfaces promote extended service life
- Pulls sliding cores in injection molds and die cast tools
- Withstands temperatures up to 356°F (180°C)*
- Proximity sensors recognize full forward and full reverse

*Refer to Note #1.

System Cost Savings

Cost savings achieved when the Hydraulic Locking Core Pull Cylinder is used instead of traditional methods:

- Mold design and manufacturing time
- Mold fitting and assembly time
- Mold maintenance time
- Material cost (smaller mold base required)
- Cycle time reduction

NOTES:

1. When using proximity sensors standard to Core Pull Cylinders, the cylinder assembly will withstand temperatures up to 212ºF (100ºC).
2. When an external method for sensing sliding core position is used, the cylinder assembly will withstand temperatures up to 356ºF (180ºC).
3. Proximity sensors are replaced by plugs - Item# (WD81NANON)

HYDRAULIC LOCKING CORE PULL CYLINDERS

Benefits, Cost Savings and Product Overview

Product Overview

When designing molds with sliding cores, the mold designer is often faced with the challenge of fitting all traditional components in as small a mold base as possible. There are different methods of actuating a sliding core, the most common of which uses horn or angle pins (Fig. 1) to move the slide when the mold opens or closes. Heel blocks are normally used behind the sliding core to withstand injection pressure acting on the sliding core. Not only do these components use up precious mold space, but they are tied to the movement of the platen. Some molded parts also require that the sliding core be moved prior to opening a mold. While it is possible to use standard cylinders (Fig. 2) to actuate the sliding core or heel block, typical designs require additional mold design and machining, and waste mold space.

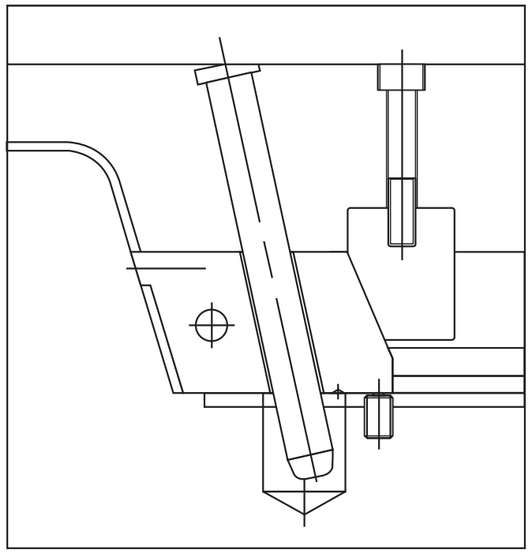

Fig. 1. Slide Movement example using an angle pin and locking with a heel block (wedge).

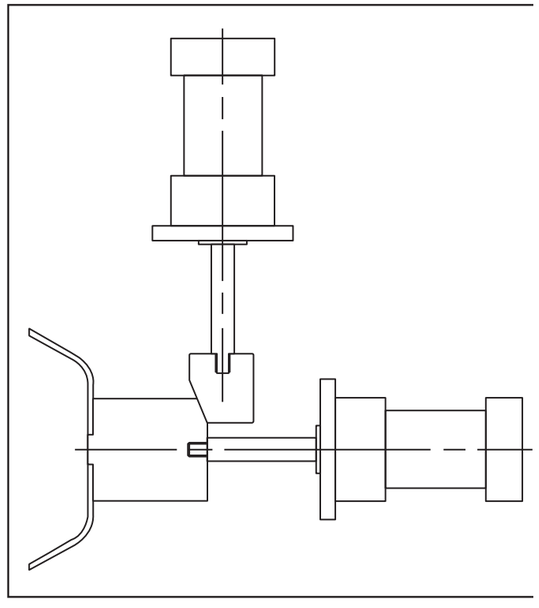

Fig. 2. Slide Movement example using a hydraulic cylinder to actuate slide, and a separate cylinder to actuate the heel block.

HYDRAULIC LOCKING CORE PULL CYLINDERS

The HLCP Cylinder Advantage

The Hydraulic Locking Core Pull (HLCP) Cylinder replaces traditional slides and heel blocks, enabling independent movement of the sliding core while eliminating the need for a heel block. By using a segmented ring that presses into an internal groove inside the cylinder assembly while in closed position, the injection pressure from the part cavity acts against the cross section of the segmented ring, eliminating the need for heel blocks.

Eliminating separate heel blocks or additional cylinders can result in a smaller mold base size, simplifying mold designs and increasing cost savings!

The HLCP Cylinder is a robust, compact design. Available in seven sizes, each size has two available standard strokes. Due to the modular design of the HLCP Cylinder, special strokes are available upon request with quick delivery. The cylinder is constructed of hardened steel for extra long service life. Because of the cylinder's special design and breadth of assembly sizes available, a wide range of holding forces are possible with a hydraulic holding pressure of only 870 PSI minimum.

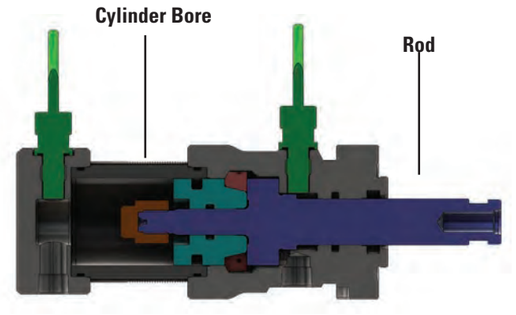

NOTES:.....

Special stroke lengths are available upon request.
Shown with required spacer used for setting preload when shutting off on core face.

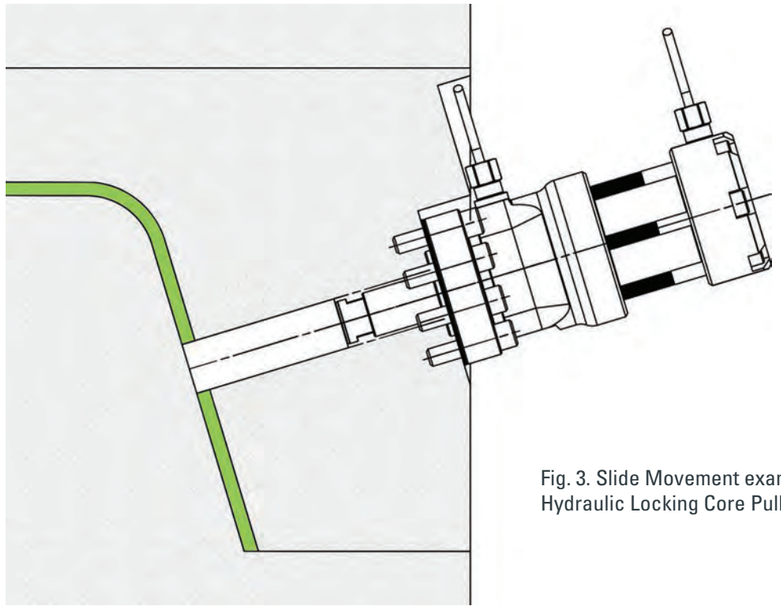

Fig. 3. Slide Movement example using the Hydraulic Locking Core Pull Cylinder.

HYDRAULIC LOCKING CORE PULL CYLINDERS

The HLCP Cylinder Advantage

ITEM NUMBER		STROKE	ROD DIA.	CYLINDER BORE DIA.
NPN TYPE	PNP TYPE			
HLCP060-1000DW	HLCP060-1000DWP	1.00"	16 mm	30 mm
HLCP060-2000DW	HLCP060-2000DWP	2.00"		
HLCP100-1250DW	HLCP100-1250DWP	1.25"	20 mm	36 mm
HLCP100-2500DW	HLCP100-2500DWP	2.50"		
HLCP150-1375DW	HLCP150-1375DWP	1.375"	25 mm	45 mm
HLCP150-2750DW	HLCP150-2750DWP	2.75"		
HLCP200-1750DW	HLCP200-1750DWP	1.75"	32 mm	56 mm
HLCP200-3500DW	HLCP200-3500DWP	3.50"		
HLCP300-2000DW	HLCP300-2000DWP	2.00"	42 mm	71 mm
HLCP300-4000DW	HLCP300-4000DWP	4.00"		
HLCP500-2500DW	HLCP500-2500DWP	2.50"	50 mm	84 mm
HLCP500-5000DW	HLCP500-5000DWP	5.00"		
HLCP750-3000DW	HLCP750-3000DWP	3.00"	60 mm	105 mm
HLCP750-6000DW	HLCP750-6000DWP	6.00"		

ITEM NUMBER		AT 160 BAR (2321 PSI) PRELOAD [mm]	HOLDING FORCE IN KILO NEWTON [kN]		HOLDING FORCE IN POUND FORCE [bf]		HOLDING FORCE IN METRIC TON [ton]		HOLDING FORCE IN UK (TROY) TON [ton]		HOLDING FORCE IN US (AVDP) TON [ton]	
NPN TYPE	PNP TYPE		WITHOUT PRELOAD	WITH MAX PRELOAD	WITHOUT PRELOAD	WITH MAX PRELOAD	WITHOUT PRELOAD	WITH MAX PRELOAD	WITHOUT PRELOAD	WITH MAX PRELOAD	WITHOUT PRELOAD	WITH MAX PRELOAD
HLCP060-1000DW	HLCP060-1000DWP	0.15	60	35	13,488	7,868	6.12	3.57	5.46	3.19	6.74	3.93
HLCP060-2000DW	HLCP060-2000DWP	0.20										
HLCP100-1250DW	HLCP100-1250DWP	0.15	100	50	22,480	11,240	10.2	5.10	9.11	4.55	11.24	5.62
HLCP100-2500DW	HLCP100-2500DWP	0.20										
HLCP150-1375DW	HLCP150-1375DWP	0.10	150	65	33,720	14,612	15.3	6.63	13.65	5.91	16.86	7.31
HLCP150-2750DW	HLCP150-2750DWP	0.15										
HLCP200-1750DW	HLCP200-1750DWP	0.15	200	110	44,960	24,728	20.39	11.21	18.20	10.01	22.48	12.36
HLCP200-3500DW	HLCP200-3500DWP	0.20										
HLCP300-2000DW	HLCP300-2000DWP	0.15	300	160	67,440	35,968	30.59	16.31	27.31	14.57	33.72	17.98
HLCP300-4000DW	HLCP300-4000DWP	0.20										
HLCP500-2500DW	HLCP500-2500DWP	0.20	500	300	112,400	67,440	50.98	30.59	45.51	27.31	56.20	33.72
HLCP500-5000DW	HLCP500-5000DWP	0.30										
HLCP750-3000DW	HLCP750-3000DWP	0.20	750	400	168,600	89,920	76.48	40.79	68.27	36.41	84.30	44.96
HLCP750-6000DW	HLCP750-6000DWP	0.30										

HYDRAULIC LOCKING CORE PULL CYLINDERS

The HLCP Cylinder Advantage



The HLCP Cylinder operates between fully opened and fully closed positions, both of which are sensed by high pressure proximity sensors without any mechanical contact. The HLCP Cylinder has a built-in cushion at the fully retracted end of the piston stroke, extending the service life of the cylinder.

The HLCP Cylinder's integral flange allows easy installation and mounts to the mold using socket head cap screws. Socket head cap screw sizes used for mounting the HLCP Cylinder to the mold are UNC-type. A spacer plate (shim) is supplied with the HLCP Cylinder for installation beneath the HLCP Cylinder flange, enabling fine adjustment in the mold. The spacer plate also provides important preload on the cylinder rod, particularly when the sliding core must shut off against the opposing wall of the core. Hydraulic fittings are NPTF-type fittings.

Due to the nature of the flange mounting design, the same size HLCP Cylinders are easily interchangeable. The cylinder's flange and screw mounting method ensures that the proximity sensors will always be positioned in the same orientation when the HLCP Cylinder is installed to the side of the mold.

NOTES:

Sensors require power.*

* NPN and PNP sensors function in a similar manner, except the power supply polarities are reversed for each type. NPN inductive sensors are more common in North America, while PNP is more common in Asia and Europe. If PNP is not requested, the cylinders will be delivered with NPN sensors, even for special orders.

HYDRAULIC LOCKING CORE PULL CYLINDERS

The HLCP Cylinder Advantage

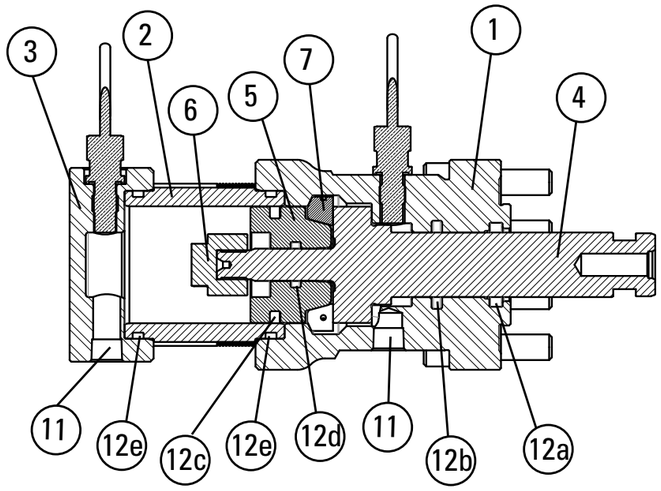

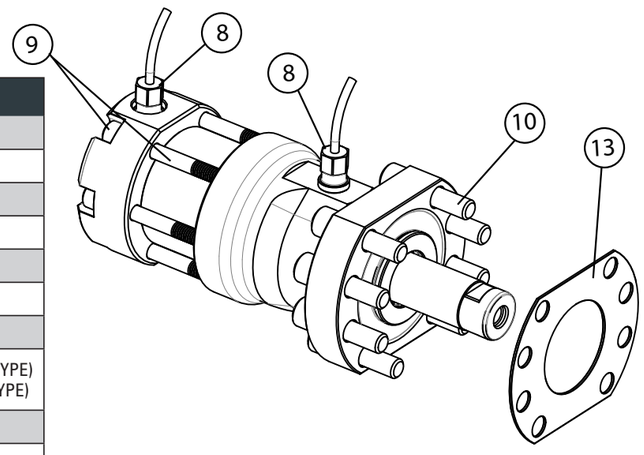

ITEM	PART NAME	NOTES
1	BODY	
2	SLEEVE	
3	CAP	
4	ROD	
5	PISTON	
6	PISTON BUSHING	
7	SEGMENT KIT	
8	SENSOR	HLCPNPN-M8 (NPN TYPE) HLCPPNP-M8 (PNP TYPE)
9	ASSEMBLY SCREW	
10	MOUNTING SCREW	
11	OIL CAP	
12	SEALING KIT	SEE INSTALLATION INSTRUCTIONS ON DME.NET
12a	EXCLUDER	
12b	STEP SEAL	
12c	GLYD RING	
12d	O-RING	
12e	O-RING	
13	SPACER	

HYDRAULIC LOCKING CORE PULL CYLINDERS

Mold Design & Installation Considerations

Available in seven sizes, each size of the Hydraulic Locking Core Pull Cylinder has two available “standard” stroke lengths. If a stroke is required that is different than the available standard strokes, then a non-standard stroke design is required. When ordering this product, specify the required stroke if the available standard strokes are not suitable for the intended application.

Hydraulic Locking Core Pull Cylinder Assembly Sizes

ITEM NUMBER		STROKE	ROD DIA.	CYLINDER BORE DIA.	NPTF TAP
NPN TYPE	PNP TYPE				
HLCP060-1000DW	HLCP060-1000DWP	25.4 mm (1.00 in)	16 mm (0.63 in)	30 mm (1.18 in)	⅛
HLCP060-2000DW	HLCP060-2000DWP	50.8 mm (2.00 in)			
HLCP100-1250DW	HLCP100-1250DWP	31.8 mm (1.25 in)	20 mm (0.79 in)	36 mm (1.42 in)	⅛
HLCP100-2500DW	HLCP100-2500DWP	63.5 mm (2.50 in)			
HLCP150-1375DW	HLCP150-1375DWP	34.9 mm (1.375 in)	25 mm (0.98 in)	45 mm (1.77 in)	¼
HLCP150-2750DW	HLCP150-2750DWP	69.9 mm (2.75 in)			
HLCP200-1750DW	HLCP200-1750DWP	44.5 mm (1.75 in)	32 mm (1.26 in)	56 mm (2.20 in)	¼
HLCP200-3500DW	HLCP200-3500DWP	88.9 mm (3.50 in)			
HLCP300-2000DW	HLCP300-2000DWP	50.8 mm (2.00 in)	42 mm (1.65 in)	71 mm (2.80 in)	⅜
HLCP300-4000DW	HLCP300-4000DWP	101.6 mm (4.00 in)			
HLCP500-2500DW	HLCP500-2500DWP	63.5 mm (2.50 in)	50 mm (1.97 in)	84 mm (3.31 in)	⅜
HLCP500-5000DW	HLCP500-5000DWP	127.0 mm (5.00 in)			
HLCP750-3000DW	HLCP750-3000DWP	76.2 mm (3.00 in)	60 mm (2.36 in)	105 mm (4.13 in)	½
HLCP750-6000DW	HLCP750-6000DWP	152.4 mm (6.00 in)			

HYDRAULIC LOCKING CORE PULL CYLINDERS

Mold Design & Installation Considerations

The HLCP Cylinder maintains a sliding core in full back (retracted) or full forward (extended) positions. In order for the cylinder assembly to "lock", the piston must be fully extended forward. This product's provided spacer plate is placed between the front of the body flange and pocket installation. The spacer plate must be properly ground to ensure suitable fit at the desired mold operation temperature. The adjustment of the spacer plate is important for when the sliding core must "shut off" against an opposing core wall or face, so that plastic flashing is avoided.

Positional alignment of the cylinder assembly is achieved by aligning the forward collet of the cylinder body (protrudes forward of the mounting flange) into the mold plate via the outer diameter of the collet. The collet will protrude past the spacer plate. Rotational alignment of the overall assembly is achieved via the mounting screws, as rotational alignment is only used to position the proximity sensors and hydraulic fitting connections and/or hoses within the overall installation. The piston may freely rotate; therefore, if rotational alignment of the sliding core is required, rotational alignment of the sliding core must be achieved via other means.

While recommended installation pocket details are based on the cylinder assembly being recessed into the side of the mold plate, it is possible to have the cylinder assembly mounted fully "proud" of the side of the mold plate. However, positional alignment of the cylinder assembly to the mold plate requires the forward collet (protruding forward of the mounting flange of the cylinder body) to be recessed partially into the side of the mold. An overall installation adjustment is required to fit each application, while maintaining minimum clearances for the hydraulic fitting connections and/or hoses, as well as maintaining clearances for the proximity sensors.

HYDRAULIC LOCKING CORE PULL CYLINDERS

HLCP Cylinder – Faxable Quote Form

QUOTE FAX HOTLINES or email customer_service@dme.net

United States 888-808-4363 • Canada 800-461-9965 • International 248-398-7394

Company name:	DME account #:
Contact name:	P.O. #:
Phone:	FAX:
Address:	E-mail:
City:	State/Province:
ZIP/Postal Code:	Country:

Shipping method:

☐ UPS Ground ☐ UPS 2nd Day Air ☐ UPS Next Day ☐ FedEx ☐ Other _____

Cylinder size required:

Select Size Option:

☐ 060 ☐ 100 ☐ 150 ☐ 200 ☐ 300 ☐ 500 ☐ 750

Please refer to the DME Mold Components catalog for more details on the rated load capacity for each cylinder size.

Note: Load capacity is reduced if preload is required.

Piston rod stroke required:

_____ [inches]

Please refer to the DME Mold Components catalog for standard stroke lengths available.

Note: For proper operation, the piston rod needs to be actuated over the full stroke. If you require a stroke length that is different than what is offered as standard for the desired cylinder size, then a special HLCP cylinder is required.

Type of Inductive Proximity Sensor required:

Please select one:

☐ NPN ☐ PNP

Note: The inductive proximity sensors supplied are standard NPN, unless otherwise specified at the time of order. Both NPN and PNP inductive proximity sensors require power to generate a signal. If your injection molding machine has only dry contacts, please refer to the packing slip (installation instructions) for a suggested alternative wire-up using a 3rd party DC relay, or use external limit switches in your mold.

☐ *All of my requirements are standard; I do not require Engineering to review my application, and I do not need to complete the rest of the form.*

Area of sliding core face (in the molded part):		[square inches]
Peak injection pressure in the molded part cavity:		[PSI]
Does your application require preload? (Are you intending to form a "window" in your molded part?)	☐ Yes	☐ No
If "yes", what is the shut-off area on the sliding core?		[square inches]
Piston Rod Load capacity required:		[pounds]

☐ *I have special requirements; I need Engineering to review my application and the entire form is complete.*

KRYTOX™ TM7 GREASE

The "Stay-Put" Lubricant

Extreme Conditions. Extreme Performance.
Chemour Krytox™ TM7 grease is specifically designed for the lubrication of segmented molds, both electrically and steam-heated. This lubricant eliminates carbon residue buildup on the molds associated with hydrocarbon and hydrocarbon-based synthetic greases. It exhibits excellent adhesion and will not bleed out to the parting line due to high heat tolerance, allowing the operator to significantly increase production by extending lubrication intervals.



Krytox TM7 is a fluorinated grease with polytetrafluorethylene (PTFE) thickeners and selected additives. It has excellent thermal stability and load-carrying abilities. TM7 has a high degree of chemical inertness and extremely high hydrolytic stability. Contact with boiling water or steam has no effect on this product, it will stay in the location it was applied, providing the best lubrication possible.

ITEM NUMBER	DESCRIPTION
TM7TUBE2OZ	TM7 KRYTOX GREASE 2OZ TUBE
TM7TUBE8OZ	TM7 KRYTOX GREASE 8OZ TUBE
TM7JAR1KG	TM7 KRYTOX GREASE 1KG JAR

TYPICAL PROPERTIES OF Chemour Krytox™ TM7	
Standard NLGI Penetration Grade	#2
Estimation Useful Temperature Range	-20 to 290 (-4 to 555)
Pour Point, °C (°F)	–25 (–13)
Base Oil Viscosity, cSt **20 °C (68 °F)** **40 °C (104 °F)** **100 °C (212 °F)**	 1,715 500 46
Oil Volatility, % in 22 hr, 260 °C (500 °F), D972 modified	<1
Appearance	White, creamy consistency
Specific Gravity	2.0



DME UNILIFTER® SYSTEMS

UNDERCUT RELEASING SYSTEM

Table of Contents

Typical Application 60
Core Blades 61-62
U-Couplings & T-Gibs 63
Design Guidelines 64

UNILIFTER® UNDERCUT RELEASING SYSTEM

UniLifter® Typical Application



- Standard components simplify mold design and construction for release of molded undercuts
- Radiused dovetail design lets core blade seat automatically at the required angle
- Smooth travel of U-Coupling in T-Gib eliminates heel binding often encountered in other fixed angle designs
- Wide size selection covers more applications than similar standardized systems
- H-13 core blades for easy conventional machining
- Aluminum Bronze blades for high heat transfer application

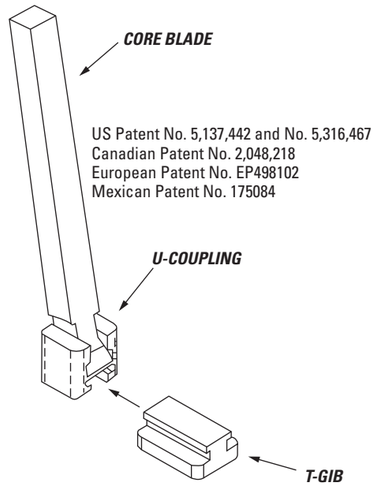

TYPICAL APPLICATION:

MOLD AND RELEASE INTERNAL UNDERCUT

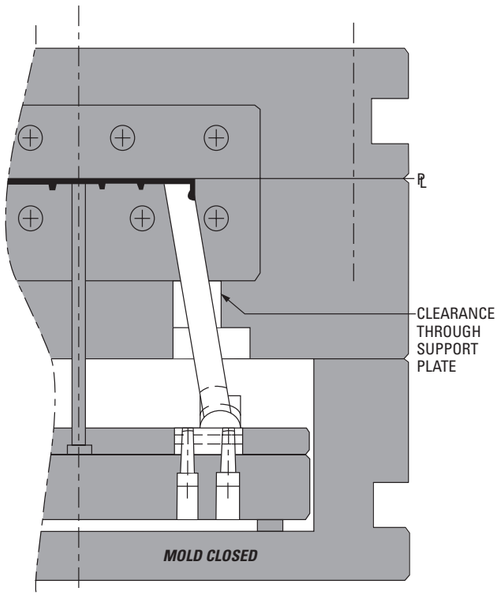

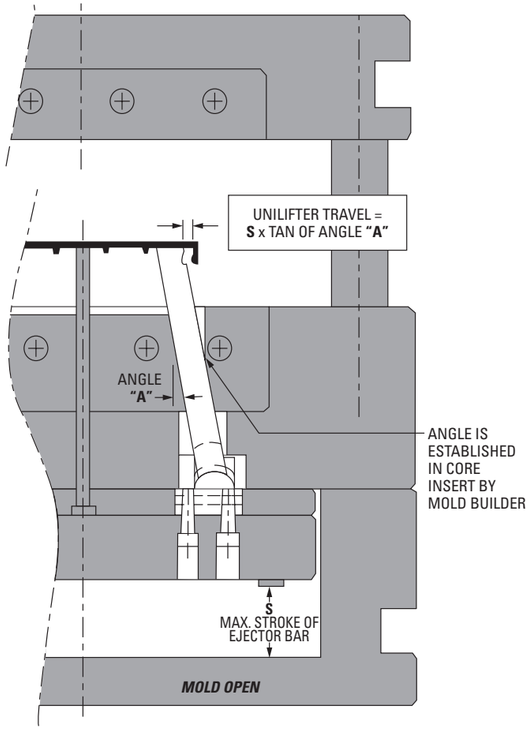

UniLifter is a Trademark of Progressive Components

UNILIFTER® UNDERCUT RELEASING SYSTEM

UniLifter® Core Blades



Core Blades

Material: H-13 Steel
Hardness: 38-42 HRC

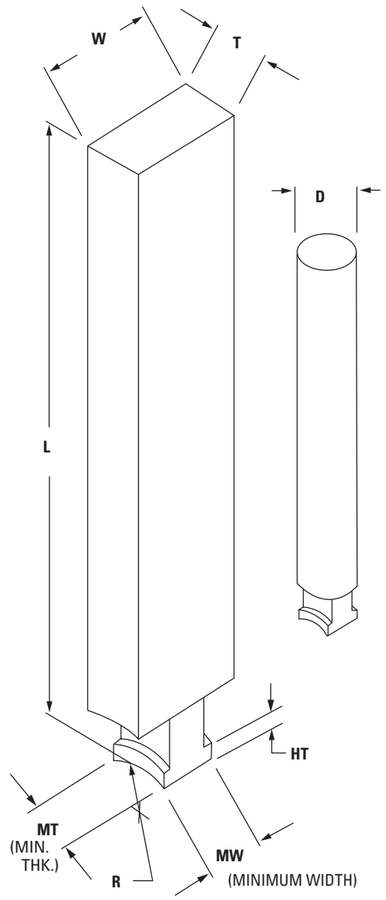

NOTE:
1. Thickness **(T)** and width **(W)** can be ground for fitting to insert pockets and/or to accommodate a nominal size molded detail.
2. Diameter **(D)** of round core blades is supplied +.000/–.001" (or +.000/–.025mm) for fitting in a bored hole or bushing.

Flat Core Blades – INCH

STYLE	SERIES (MW)	R	HT	MT (MIN. THK.)	ITEM NUMBER	T + .000 – .001	W + .000 – .001	L + .06 – .00
MiniLifter	.250	.250	.156	.25	ULBM37X25L8	.385	.260	8
				.31	ULBM50X25L8	.510	.260	8
					ULBM75X37L8	.760	.385	8
UniLifter	.500	.406	.187	.49	ULBU50X50L8	.510	.510	8
					ULBU50X50L14	.510	.510	14
					ULBU50X100L8	.510	1.010	8
					ULBU50X100L14	.510	1.010	14
					ULBU50X150L14	.510	1.510	14
				.62	ULBU75X50L14	.510	1.510	14
					ULBU100X50L8	1.010	.510	8
					ULBU100X50L14	1.010	.510	14
					ULBU150X50L8	1.510	.510	8
					ULBU150X50L14	1.510	.510	14
					ULBU75X150L8	.760	1.510	8
					ULBU75X150L14	.760	1.510	14
					ULBU150X75L8	1.510	.760	8
					ULBU150X75L14	1.510	.760	14
XL-Lifter	1.000	.875	.375	1.00	ULBX100X150L10	1.010	1.510	10
					ULBX100X150L18	1.010	1.510	18
					ULBX100X100L10	1.010	1.010	10
					ULBX100X100L18	1.010	1.010	18
					ULBX150X100L10	1.510	1.010	10
					ULBX150X100L18	1.510	1.010	18

Flat Core Blades – METRIC (dimensions in mm)

SERIES (MW)	R	HT	MT (MIN. THK.)	ITEM NUMBER	T + .000 – .025	W + .000 – .025	L + 2 – 0
10	10	5	10	ULBMM10X10L250	10.25	10.25	250
			15	ULBMM15X15L250	15.25	15.25	250
			10	ULBMM10X20L250	10.25	20.25	250
			15	ULBMM20X10L250	20.25	10.25	250
			15	ULBMM15X30L250	15.25	30.25	400
			15	ULBMM30X15L250	30.25	15.25	400
			15	ULBMM20X20L400	20.25	20.25	400

Round Core Blades – INCH

STYLE	SERIES (MW)	R	HT	MT (MIN. THK.)	ITEM NUMBER	D + .000 – .001	L + .06 – .00
MiniLifter	.250	.250	.156	.31	ULBM43DL8	.437	8
UniLifter	.500	.406	.187	.62	ULBU75DL8	.750	8
					ULBU75DL14	.750	14
					ULBU75DL18	.750	18
XL-Lifter	1.000	.875	.375	1.00	ULBX125DL10	1.250	10
					ULBX125DL18	1.250	18

Round Core Blades – METRIC (dimensions in mm)

SERIES (MW)	R	HT	MT (MIN. THK.)	ITEM NUMBER	D + .000 – .025	L + 2 – 0
10	10	5	10	ULBMM10DL250	10	250
10	10	5	10	ULBMM15DL250	15	250

UNILIFTER® UNDERCUT RELEASING SYSTEM

UniLifter® Core Blades

Core Blades

Material: Ampco 21
Hardness: 29 RC



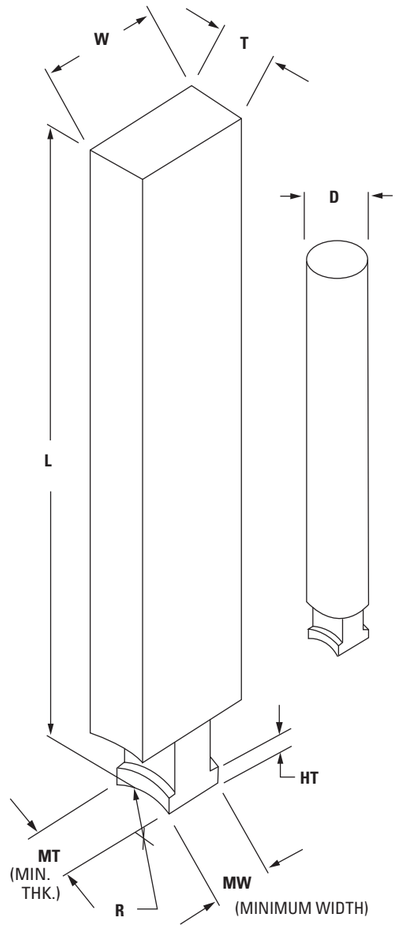

Flat Core Blades – INCH

SERIES (MW)	R	HT	MT (MIN. THK.)	ITEM NUMBER	T + .000 – .001	W + .000 – .001	L + .06 – .00
.500	.406	.187	.49	ULBUA50X50L8	.510	.510	8
				ULBUA50X50L14	.510	.510	14
				ULBUA50X100L8	.510	1.010	8
				ULBUA50X100L14	.510	1.010	14
				ULBUA50X150L14	.510	1.510	14
			.62	ULBUA100X50L8	1.010	.510	8
				ULBUA100X50L14	1.010	.510	14
				ULBUA150X50L8	1.510	.510	8
				ULBUA150X50L14	1.510	.510	14
				ULBUA75X150L8	.760	1.510	8
				ULBUA75X150L14	.760	1.510	14
				ULBUA150X75L8	1.510	.760	8
				ULBUA150X75L14	1.510	.760	14
				ULBUA75X50L14	.760	.510	14

Round Core Blades – INCH

SERIES (MW)	R	HT	MT (MIN. THK.)	ITEM NUMBER	D + .000 – .001	L
.500	.406	.187	.62	ULBUA75DL8	.750	8
				ULBUA75DL14	.750	14
				ULBUA75DL18	.750	18

NOTE:
1. Thickness **(T)** and width **(W)** can be ground by the moldmaker for fitting to insert pockets and/or to accommodate a nominal size molded detail.
2. Diameter **(D)** of round core blades is supplied +.000/–.001" (or +.000/–.025mm) for fitting in a bored hole or bushing.

DME

UNILIFTER® UNDERCUT RELEASING SYSTEM

UniLifter® U-Couplings & T-Gibs



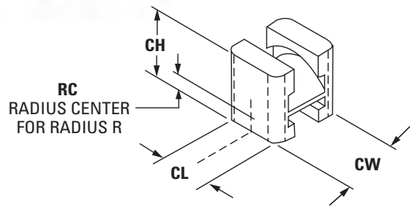

U-Couplings

Material: H-13 Steel
Hardness – Surface: 60-70 RC **Hardness – Core:** 38-42 RC

U-COUPLINGS – INCH

SERIES	ITEM NUMBER	CW	CL	CH	RC	R
.250	ULCM50	.475	.437	.62	.125	.250
.500	ULCU87	.860	.750	.87	.187	.406
1.000	ULCX175	1.725	1.500	1.65	.125	.875

U-COUPLINGS – METRIC dimensions in mm

SERIES	ITEM NUMBER	CW	CL	CH	RC	R
10	ULCMM22	22	18.00	25	6	10

T-Gibs

Material: 4140 Pre-hardened Steel
Hardness – Surface: 60-70 RC **Hardness – Core:** 38-42 RC

T-GIBS – INCH

SERIES	TW + .000 – .001	TH + .010 – .000	TD* + .010 – .000	TR	SHCS (INCLUDED)	ITEM NUMBER	TS	TL + .000 – .010	TRAVEL ALLOWED
.250	.500	.500	.344	.093	#10-32x1"	ULGM31	CL	.750	.312
						ULGM100	.500	1.500	1.000
.500	.875	.468	.219	.187	¼-20x¾	ULGU25	CL	1.000	.250
						ULGU50	.375	1.250	.500
						ULGU100	.625	1.750	1.000
						ULGU150	.750	2.250	1.500
1.000	1.750	.615	.250	.312	⅜-16x1¼	ULG×50	.625	2.000	0.500
						ULG×100	.875	2.500	1.000
						ULG×250	1.375	4.000	2.500

***NOTE:** Thickness TD is provided with an additional .010" (or .25mm) for final adjustment of entire UniLifter system. Values shown above include fitting stocks.

T-GIBS – METRIC dimensions in mm

SERIES	TW + .000 – .025	TH + .25 – .00	TD* + .25 – .00	TR	SHCS	ITEM NUMBER	TS	TL + .00 – .25	TRAVEL ALLOWED
10	22	13	6.00	5	M-5x20	ULGMM10	10	33	10
						ULGMM30	15	52	30

Each UniLifter assembly is comprised of a Core Blade, U-Coupling and T-Gib. Always select components of the same Series (.250, .500, 1.000 or 10) when ordering assemblies.

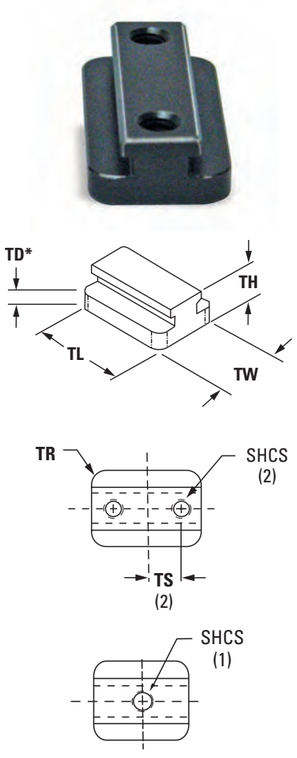

PLAN VIEW FOR
ULGM31 & ULGU25

UNILIFTER® UNDERCUT RELEASING SYSTEM

UniLifter® Design Guidelines

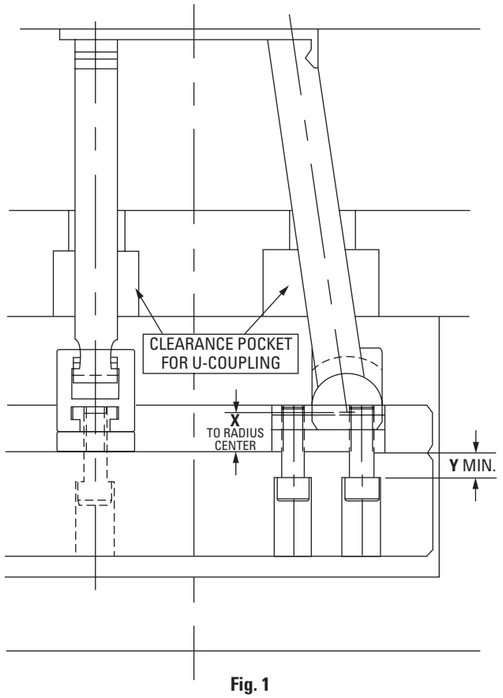

Fig. 1

Design Guidelines

1. **General Installation**

   It is recommended that lifters be installed as shown in **Fig. 1**, with T-Gib mounted to top of ejector plate. The appropriate **X** and **Y** dimensions are as follows (min. Y dimension prevents mounting screws from interfering with U-Coupling travel):

SERIES	X	Y MIN.
.250	.469	.78
.500	.406	.37

SERIES	X	Y MIN.
1.000	.375	71
10	12mm	11mm

2. **Angles**

   Designs using angles from 5 to 10 degrees will typically yield the best results. Angles up to 15 degrees are permissible by using lifter guides in the bottom of the support plate. (Lifter guides to be made by moldmaker).

3. **Lifter Guides**

   Lifter guides are recommended for designs with angles of 15 degrees (see 2 above) or whenever less than half of the core blade is bearing in the core insert.

4. **Guided Ejection**

   It is recommended that guided ejection be used in all designs.

5. **Fit and Finish**

   Recommended clearance for core blade is .001–.0015" (.025–.038 mm) where permissible. Although standard core blades are approximately 10 Rc above P-20 and 10 Rc below hardened tool steel, additional performance can be obtained by treating after finish machining (TiN coating, chrome flash, etc).

6. **Locking Angles**

   Locking angles (see **Fig. 2**) may be designed in if required to provide a locking surface to counter against molding pressure.

7. **Non-Standard Shapes/Materials**

   L-shaped core blades as shown in **Fig. 3** may be machined by removing stock from thicker core blades. Material from the heel area should not be removed. The bearing dimension **T-1** should be on the same center as radius **R**.

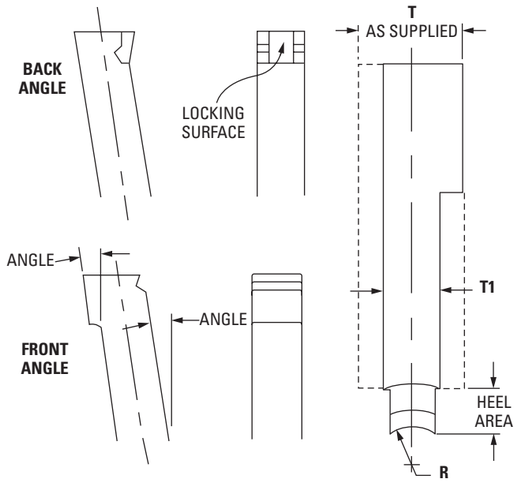

Fig. 2

Fig. 3

L-shaped core blades, or blades made from other materials can also be supplied on special order. Contact DME for details.



This product is no longer available

DME VECTORFORM LIFTER SYSTEMS

TAKING LIFTER SYSTEMS TO THE NEXT LEVEL

Table of Contents

Overview....66-68
Design Guidelines....69
Advanced Applications....70-71
Component Specifications....72-75
Ordering Information....76
Dual Rod Design Benefits....77-78

VECTORFORM LIFTER SYSTEMS
Overview

VectorForm Lifter Advantages

- 30˚+ Angle – Half the stroke for the same undercut
- Simple plate machining
- Easy installation
- May be ganged
  - Multiple systems may be "ganged" to lift a large lifter core
  - A single system can lift multiple lifter cores
- Accelerate or decelerate the motion of the lifter core relative to the ejector plate
- Cooling may be added
- Design flexibility is improved

Standard

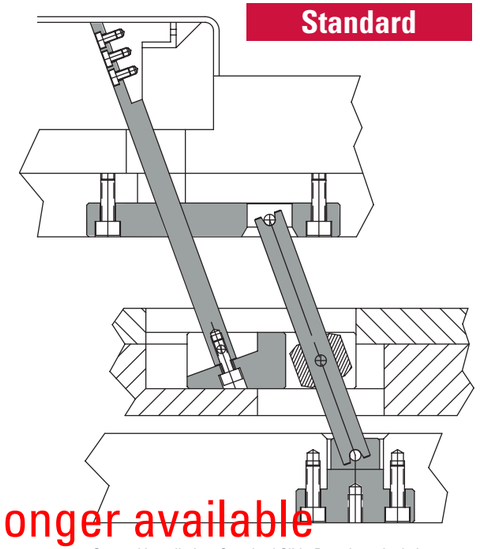

This product is no longer available

General installation. Standard Slide Base in typical ejector plate installation shown.

Universal

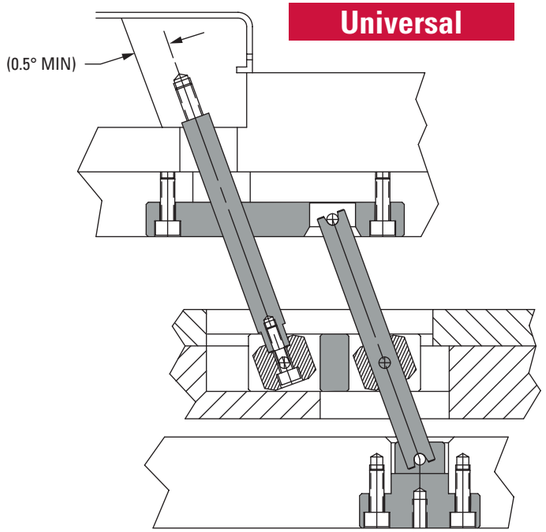

Universal Slide Base shown in typical ejector plate installation.

Joint

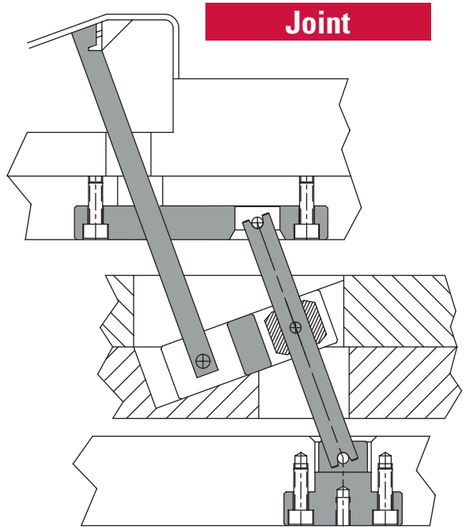

Angled Slide Base installation may be used to accelerate or decelerate the action of the VectorForm Lifter System. In this example, the VectorForm Lifter System movement is decelerated relative to the movement of the ejector plate.

VECTORFORM LIFTER SYSTEMS
Overview

VectorForm Lifter System Features & Benefits

Patent No. 2823782

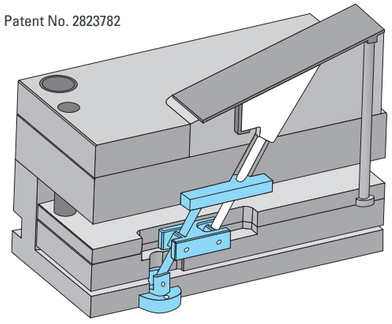

DME Supplied

Customer Supplied

VectorForm Lifter Systems maximize design flexibility and offer off the shelf installation into most lifter applications.

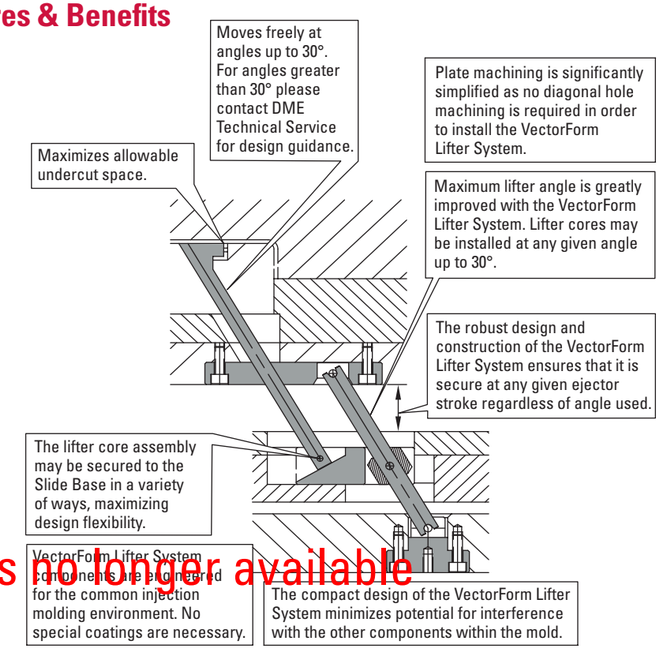

This product is no longer available

VectorForm Slide Bases

VectorForm Lifter Systems offer three types of slide bases to meet the needs of your applications.

- The **Standard Slide Base** (SB) is the most flexible and the most economical slide base. The Standard Slide Base can be custom machined by the mold builder to meet specialized application requirements. The Standard Slide Base is also the most robust slide base with respect to loads and forces.
- The **Joint Slide Base** (JB) permits the lifter core assembly to be retained with a single pin.
- The **Universal Slide Base** (UB) is similar to the Joint Slide Base, although the single pin is replaced by a universal joint which offers greater flexibility than the Joint Slide Base (JB) while still requiring only one screw to retain the lifter core assembly.

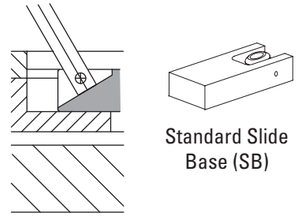

Standard Slide Base (SB)

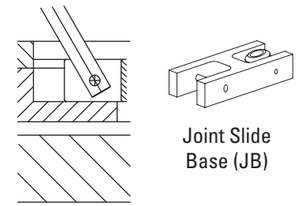

Joint Slide Base (JB)

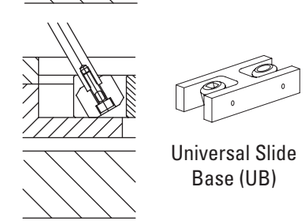

Universal Slide Base (UB)

VECTORFORM LIFTER SYSTEMS

Overview

Mold Base Overview

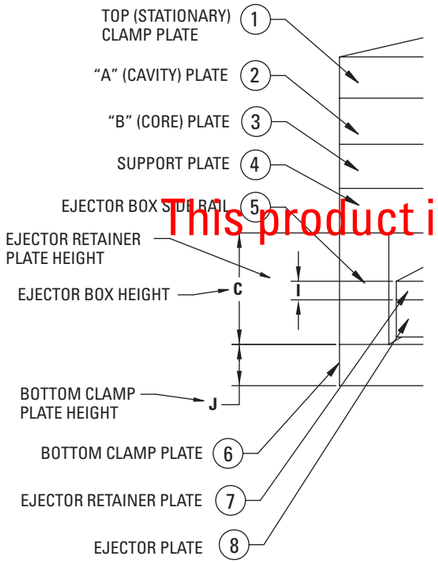

This product is no longer available

VectorForm Lifter Overview

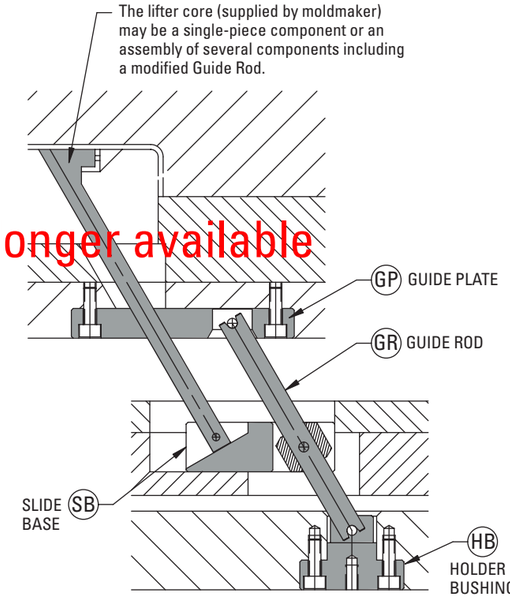

VectorForm Lifter Operating Sequence

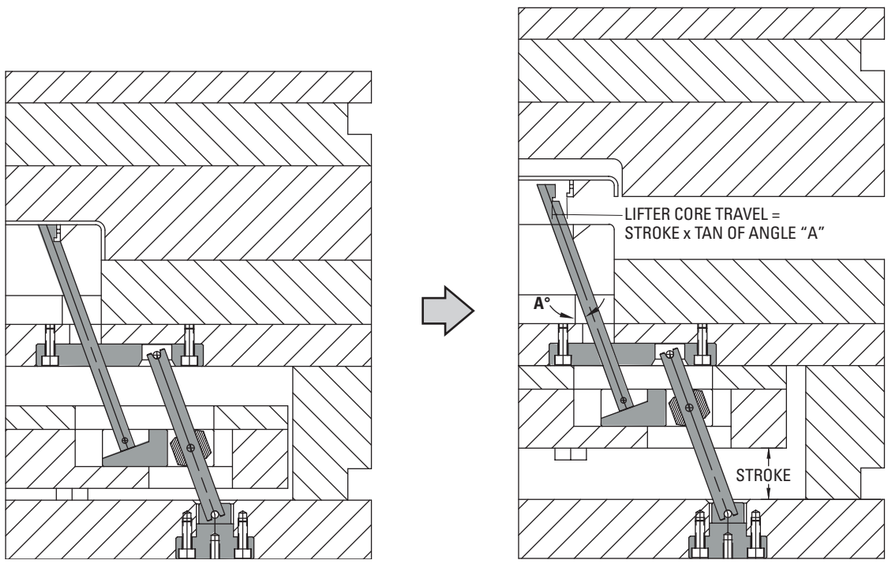

VECTORFORM LIFTER SYSTEMS

Design Guidelines

LENGTH OF GUIDE ROD:
y = C + Hg + h
L' = y/cosK° **L = L' + 2R**

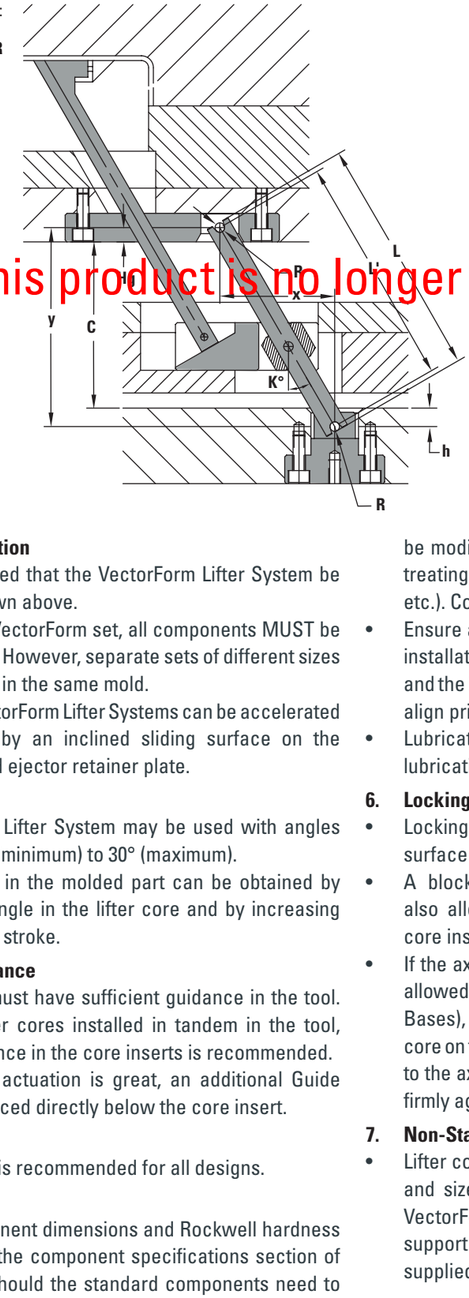

This product is no longer available

Locking Angles

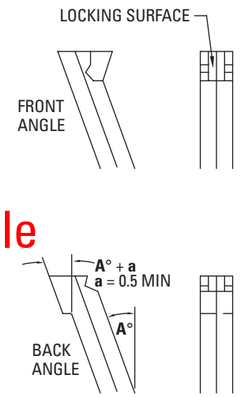

1. General Installation

- It is recommended that the VectorForm Lifter System be installed as shown above.
- For each given VectorForm set, all components MUST be of the same size. However, separate sets of different sizes may be installed in the same mold.
- Actuation of VectorForm Lifter Systems can be accelerated or decelerated by an inclined sliding surface on the ejector plate and ejector retainer plate.

2. Angles

- The VectorForm Lifter System may be used with angles ranging from 5° (minimum) to 30° (maximum).
- Deep undercuts in the molded part can be obtained by using a larger angle in the lifter core and by increasing the ejector plate stroke.

3. Lifter Core Guidance

- The lifter core must have sufficient guidance in the tool. For multiple lifter cores installed in tandem in the tool, additional guidance in the core inserts is recommended.
- If resistance in actuation is great, an additional Guide Plate may be placed directly below the core insert.

4. Guided Ejection

- Guided ejection is recommended for all designs.

5. Fit and Finish

- Standard component dimensions and Rockwell hardness are provided in the component specifications section of this brochure. Should the standard components need to be modified, additional performance can be obtained by treating after finish machining (TiN coating, flash-chrome, etc.). Component installations can be fitted to suit.
- Ensure a loose fit on the Holder Bushing and Guide Plate installation. Ensure a precise fit between the lifter core and the Guide Plate. The Holder Bushing will automatically align prior to bolting the bushing to the clamp plate.
- Lubrication is not generally required nor recommended. If lubrication is used, it should be low-viscosity.

6. Locking Angles/Component Back-Up

- Locking angles may be designed to provide a locking surface to counter against molding pressure.
- A block construction using a square lifter core can also allow the resin pressure to be backed up by the core insert.
- If the axial load acting on the lifter core exceeds the limit allowed for the slide base pin (used in JB and UB Slide Bases), use a Standard (SB) Slide Base and back the lifter core on the slide by machining a ledge that is perpendicular to the axis of the lifter core. The lifter core must then seat firmly against the angled face of the Slide Base.

7. Non-Standard Shapes/Materials

- Lifter core blocks may be machined to any desired shape and size, provided the chosen number and size of the VectorForm Lifter System core standard components will support the lifter core blocks. Lifter core blocks are to be supplied by the moldmaker.

VECTORFORM LIFTER SYSTEMS

Advanced Applications

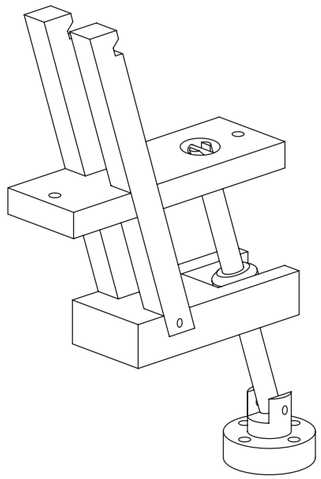

Example of multiple lifter cores being actuated in parallel by a Standard Slide Base (SB).

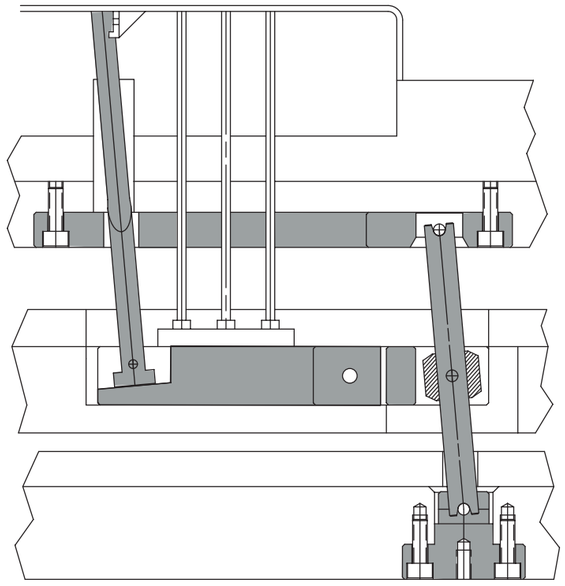

VectorForm Lifter System example with tandem ejector pins in close proximity to slide base. Joint Slide Base (JB) shown.

NOTE: Ejector pins are secured to, and move with, the ejector plate assembly, not the VectorForm System Slide Base.

This product is no longer available

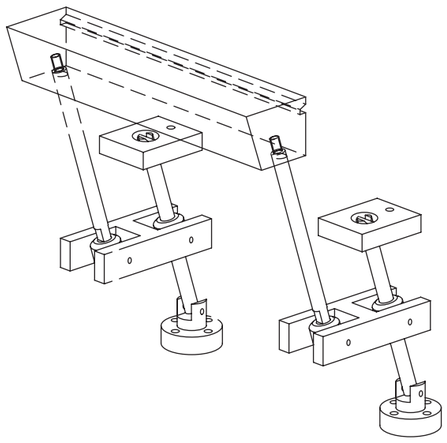

Example of two VectorForm Lifter System assemblies being used in parallel to lift a large lifter core assembly (UB shown).

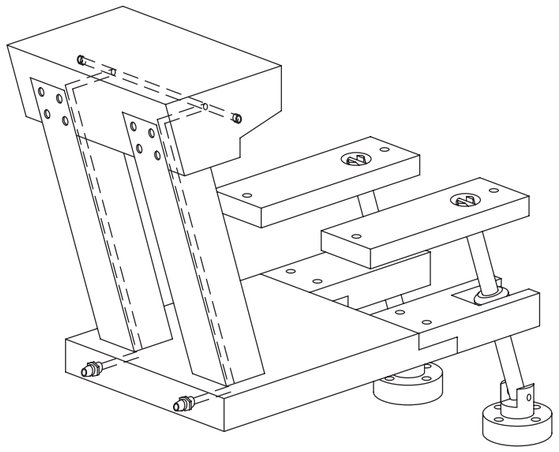

Multiple VectorForm Lifter Systems shown in parallel, actuating a large water-cooled lifter core through an extended Standard Slide Base.

DME

VECTORFORM LIFTER SYSTEMS

Advanced Applications

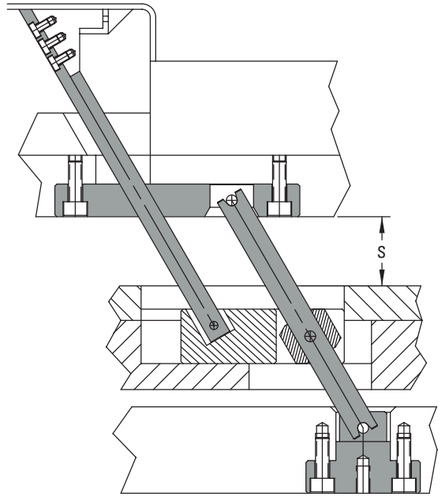

Deep undercut attained by increasing the shift angle and by having sufficient stroke "S". Standard Slide Base (SB) shown.

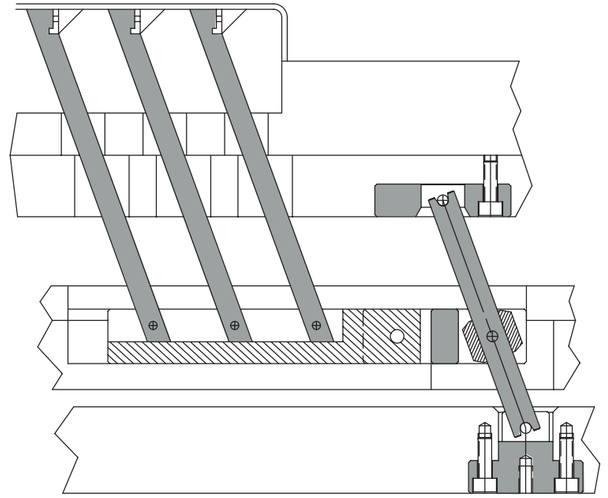

Multiple VectorForm Lifter Systems can be operated in tandem by a single Guide Rod assembly with the use of a simple extension coupled with a standard slide plate. Joint Slide Base (JB) shown.

This product is no longer available

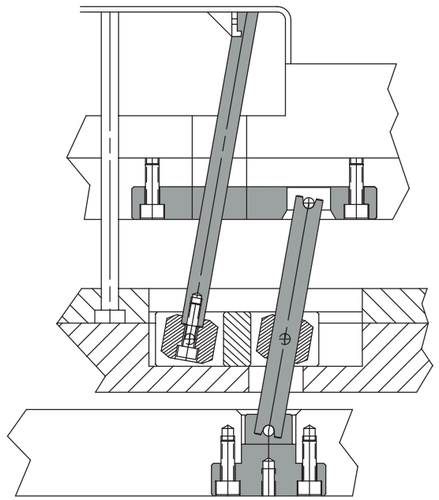

Avoid interference with the adjacent components by using a small section lifter core and by using reverse installation. Universal Slide Base (UB) shown.

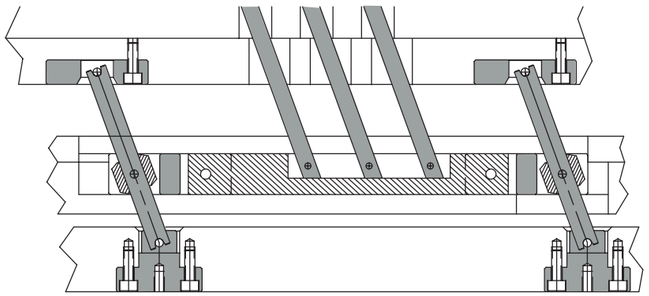

In cases of high ejection resistance, serial tandem guidance can be aided by using two or more Guide Rod assemblies. Joint Slide Base (JB) shown.

VECTORFORM LIFTER SYSTEMS

VectorForm Component Specifications

Standard Slide Base – SB

Material: SCM-440 / DIN 42 CrMo4 / AISI-4140
Hardness: 30-33 HRC

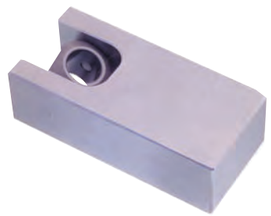

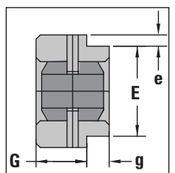

STANDARD SIZE OF GUIDE STEP				
	E	e	G	g
06	16	2.0	9	4
08	20	2.5	11	4
10	26	3.0	14	6
13	33	3.5	17	8
16	42	4.0	22	8
20	50	5.0	28	12

NOTE: Dimensions for retaining step to be machined by moldmaker as necessary.

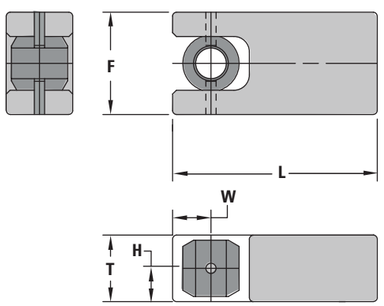

Additional Machining:

- Retaining bolt installation on lifter core rod or assembly
- Grooves as shown to far left of figure (for alignment) if required

Heat Treatment:

- Gas nitriding is permissible after additional machining has been performed

This product is no longer available

Joint Slide Base – JB

Material: SCM-440 / DIN 42 CrMo4 / AISI-4140
Hardness: 29-34 HRC

Joint Pin material: SKH-51 / DIN S6-5-2 / AISI M2
Hardness: 60-63 HRC
Tempering temperature: 600°C



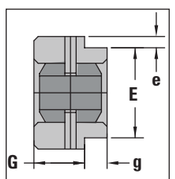

STANDARD SIZE OF GUIDE STEP				
	E	e	G	g
06	16	2.0	9	4
08	20	2.5	11	4
10	26	3.0	14	6
13	33	3.5	17	8
16	42	4.0	22	8
20	50	5.0	28	12

NOTE: Dimensions for retaining step to be machined by moldmaker as necessary.

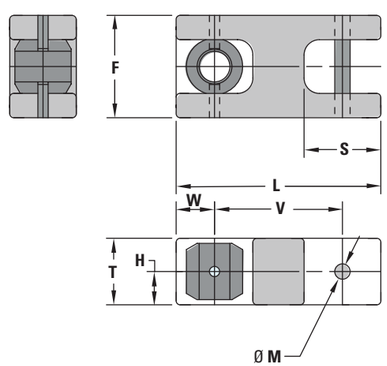

Additional Machining:
None

Attachment: Joint Pin
Heat Treatment:

- Gas nitriding is permissible
- During nitriding, use a pin finer (-0.01) than the attached joint pin

DME

VECTORFORM LIFTER SYSTEMS

VectorForm Component Specifications

Universal Slide Base – UB

Material: SCM-440 / DIN 42 CrMo4 / AISI-4140
Hardness: 30-33 HRC
Heat Treatment: Nitriding is permissible



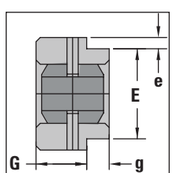

STANDARD SIZE OF GUIDE STEP				
	E	e	G	g
06	16	2.0	9	4
08	20	2.5	11	4
10	26	3.0	14	6
13	33	3.5	17	8
16	42	4.0	22	8
20	50	5.0	28	12

NOTE: Dimensions for retaining step to be machined by moldmaker as necessary.

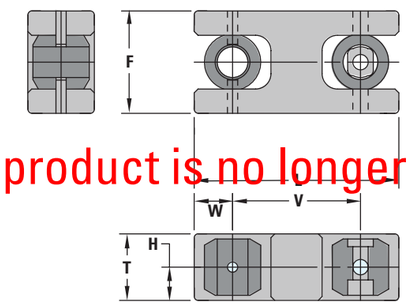

Additional Machining:
None

Attachment: None

This product is no longer available

Slide Base Ordering Information

	ITEM NUMBER					
SIZES	06	08	10	13	16	20
SB – STANDARD SLIDE BASE	VF06SB	VF08SB	VF10SB	VF13SB	VF16SB	VF20SB
JB – JOINT SLIDE BASE	VF06JB	VF08JB	VF10JB	VF13JB	VF16JB	VF20JB
UB – UNIVERSAL SLIDE BASE	VF06UB	VF08UB	VF10UB	VF13UB	VF16UB	VF20UB

	DIMENSIONS						INSTALLATION CLASSIFICATION
SYMBOL \ SIZES	06	08	10	13	16	20	
I	13	15	20	25	30	35	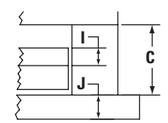
J	20	25	30	35	40	50	
C	50-120	50-150	70-200	100-250	120-300	120-400	
T	$13^{\ 0}_{-0.02}$	$15^{\ 0}_{-0.02}$	$20^{\ 0}_{-0.03}$	$25^{\ 0}_{-0.03}$	$30^{\ 0}_{-0.05}$	$40^{\ 0}_{-0.05}$	
F	$20^{\ 0}_{-0.02}$	$25^{\ 0}_{-0.02}$	$32^{\ 0}_{-0.03}$	$40^{\ 0}_{-0.03}$	$50^{\ 0}_{-0.05}$	$60^{\ 0}_{-0.05}$	
L	$40^{\ 0}_{-0.1}$	$50^{\ 0}_{-0.1}$	$60^{\ 0}_{-0.2}$	$80^{\ 0}_{-0.2}$	$100^{\ 0}_{-0.3}$	$130^{\ 0}_{-0.3}$	
D	10.5	13.5	17	22	27	33	
S	15	20	25	30	40	50	
H	6.5	7.5	10	12.5	15	20	
W	7.5	10	12.5	15	20	25	
N	Ø2	Ø3	Ø4	Ø5	Ø6	Ø7	
V*	25	30	35	50	60	80	
M*	Ø3	Ø4	Ø5	Ø6	Ø8	Ø10	

*Applies to JB and UB only.

VECTORFORM LIFTER SYSTEMS

VectorForm Component Specifications

Guide Rod – GR

Material: S-UJ-2 / DIN 100Cr6 / AISI-52100
Hardness: 58-60 HRC
Heat Treatment: Induction hardening completed; heat treat is not required



Additional Machining:

- Center distance:
  L' = Y/cosK°
  L = L' + 2R
- All dimensions shown are to be held after any additional machining has been performed
- Non-designated tolerance: +/- 0.1
- Non-designated chamfer "C" tolerance: 0.5 ~ 1.0

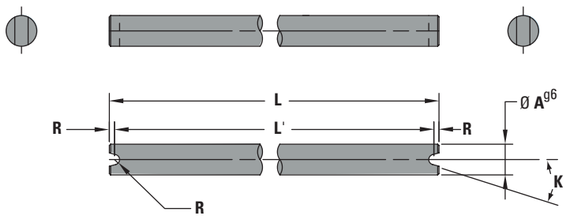

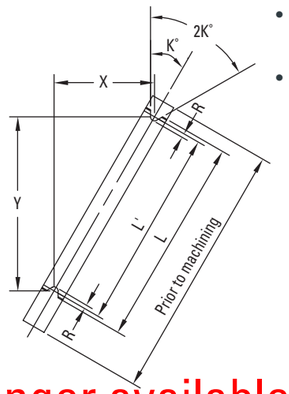

NOTE: Moldmaker to add grooves and chamfers per specifications shown.

This product is no longer available

Guide Plate – GP

Material: S-50-C / DIN C50 / AISI-1049
Hardness: 15-20 HRC
Heat Treatment: Gas nitriding is permissible after additional machining has been performed



Additional Machining:

- Lifter core hole or slot
- As required to accommodate the lifter core assembly

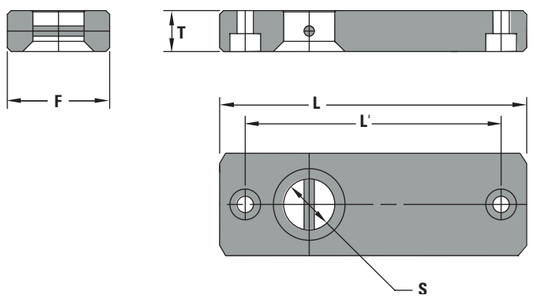

DME

VECTORFORM LIFTER SYSTEMS

VectorForm Component Specifications

Holder Bushing – HB

This product is no longer available

Material: S-50-C / DIN C50 / AISI-1049
Hardness: 15-20 HRC
Heat Treatment: Not required



Additional Machining:
None

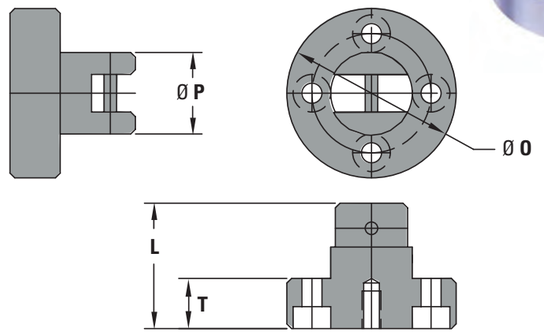

Guide Rod, Guide Plate, Holder Bushing Ordering Information

SYMBOL \ SIZES	06	08	10	13	16	20
	DIMENSIONS PER LIFTER SIZE					INSTALLATION CLASSIFICATION
I	13	15	20	25	30	35
J	20	25	30	35	40	50
C	50-120	50-150	70-200	100-250	120-300	120-400
GR – GUIDE ROD	VF06GR	VF08GR	VF10GR	VF13GR	VF16GR	VF20GR
A g6	Ø6 −0.004 −0.012	Ø8 −0.005 −0.014	Ø10 −0.005 −0.014	Ø13 −0.006 −0.017	Ø16 −0.006 −0.017	Ø20 −0.007 −0.020
L	150	190	250	310	370	500
L'	L' −0.1 −0.2	L' −0.1 −0.2	L' −0.1 −0.2	L' −0.2 −0.4	L' −0.2 −0.4	L' −0.2 −0.4
K°	Same as the shift angle of the lifter core (30° MAX)					
R	1.0 +0.02 0	1.5 +0.02 0	2.0 +0.03 0	2.5 +0.03 0	3.0 +0.05 0	3.5 +0.05 0
GR – GUIDE PLATE	VF06GP	VF08GP	VF10GP	VF13GP	VF16GP	VF20GP
T	8 0 −0.02	10 0 −0.02	12 0 −0.03	15 0 −0.03	20 0 −0.05	25 0 −0.05
F	20 0 −0.02	25 0 −0.02	32 0 −0.03	40 0 −0.03	50 0 −0.05	60 0 −0.05
L	60 0 −0.04	70 0 −0.04	90 0 −0.06	120 0 −0.06	150 0 −0.1	180 0 −0.1
L'	50	60	75	105	130	155
S	Ø10	Ø13	Ø16	Ø20	Ø25	Ø30
HR – HOLDER BUSHING	VF06HB	VF08HB	VF10HB	VF13HB	VF16HB	VF20HB
P	Ø13 0 −0.05	Ø16 0 −0.05	Ø20 0 −0.07	Ø25 0 −0.07	Ø32 0 −0.1	Ø40 0 −0.1
L	20 −0.1 −0.2	25 −0.1 −0.2	30 −0.1 −0.3	35 −0.1 −0.3	40 −0.1 −0.5	50 −0.1 −0.5
O	Ø27 0 −0.2	Ø34 0 −0.2	Ø42 0 −0.3	Ø51 0 −0.3	Ø65 0 −0.5	Ø80 0 −0.5
T	8 −0.1 −0.2	10 −0.1 −0.2	12 −0.1 −0.3	15 −0.1 −0.3	18 −0.1 −0.5	20 −0.1 −0.5

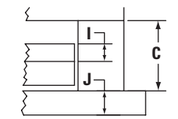

VECTORFORM LIFTER SYSTEMS

Ordering Information

VectorForm Lifter Set Ordering Information

SIZES	06	08	10	13	16	20
SS – STANDARD SET	VF06SS	VF08SS	VF10SS	VF13SS	VF16SS	VF20SS
JS – JOINT SET	VF06JS	VF08JS	VF10JS	VF13JS	VF16JS	VF20JS
US – UNIVERSAL SET	VF06US	VF08US	VF10US	VF13US	VF16US	VF20US

VectorForm Lifter Sets include:

(1) Holder Bushing – HB

(1) Guide Rod – GR

(1) Guide Plate – GP

(1) Slide Base (Standard – SB, Joint – JB, or Universal – UB)

This product is no longer available



VECTORFORM LIFTER SYSTEMS

Dual-Rod Design Benefits

A New Approach to Designing Lifter Cores: Dual-Rod Design

Benefits of using a secondary guide rod on lifter core assemblies

Conventional lifter cores have been somewhat limited in their performance given the large mold foot-prints they create. Reactionary forces and bending moments within conventional lifter core rods require smaller rod angles, which can increase mold die height and footprint.

A new approach to designing lifter cores utilizes a second guide rod that is parallel to the lifter rod. This formation eliminates the bending moment seen in conventional single-rod lifter configurations, allowing for a greater lifter angle and reducing overall die height and mold footprint.

This product is no longer available

Single-Rod Lifter Systems

When designing mold cores for undercuts and side-action molding, the designer has several lifter system options. The first is using sliding cores and angle pins. This option requires considerable mold space and may result in selecting a lifting core with a smaller platen size at the expense of a larger die height.

Conventional lifter cores also have limits on the angles allowed. If the molded undercut is large, the mold footprint may need to be increased to accommodate the required side travel of the lifter core, increasing the required die height even further.

The single-rod lifter system is designed with the core, sliding plate and gib plates within the ejector plate assembly. Close alignment of the core is accomplished through tight tolerance entrance and exit holes in the core plate. This results in additional cost and added processing problems. An overriding problem of the conventional configuration: bending moment acting on the lifter rod, which leads to increased friction, abrasion and side loads.

If the lifter rod is not sized properly, premature wear or even breakage can result. Therefore, designers often over-design the lifter rod to account for additional loading. This increases component costs and limits the number of applications for the lifter mechanism.

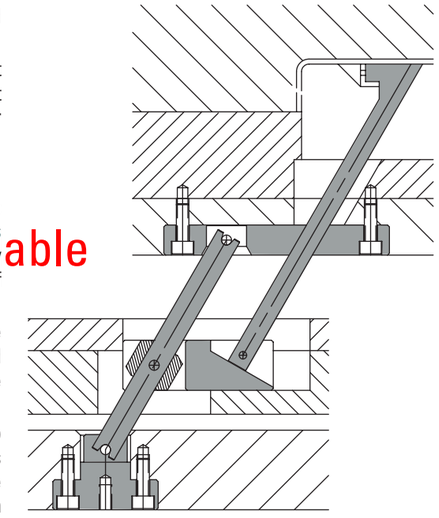

Fig. 1
Example of a preferred embodiment for designing a lifter core assembly. A second guide rod is used to create a parallelogram that significantly reduces moments acting on the lifter rod.

Dual-Rod Lifter Systems

Use of a second guide rod parallel to the lifter core is a relatively new and under-utilized method. The additional guide rod ensures proper alignment of the sliding base within the ejector plates. It also eliminates the bending stresses that occur as a result of the typical load distribution described within the conventional setup.

The new configuration creates a parallelogram within the ejector plate assembly between the primary lifter core, secondary alignment rod, alignment plate and sliding alignment base, as shown in **Fig. 1**. The structurally sound parallelogram eliminates the bending moment that occurs in single-rod systems.

Mold designers should note that the strength of the assembly will be that of the weakest link.

The use of a fixed secondary pin eliminates friction between the secondary pin and the upper alignment plate. The actuating load transferred to the primary lifter core is now centered on the axis of the lifter core and in the same direction as the motion of the core. The reduction in friction and bending moment permits a greater lifter angle, allowing the designer to reduce both the necessary die height and the mold footprint on the platen (see **Fig. 2**).

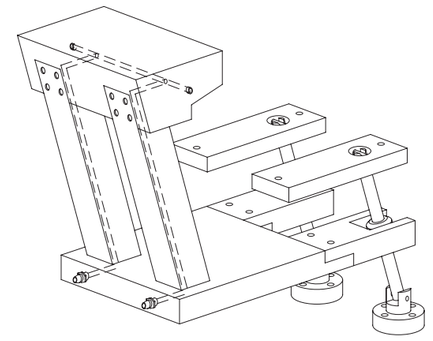

Fig. 2
Reduction in bending stress in lifter rod allows for larger angle, thereby reducing die height.

VECTORFORM LIFTER SYSTEMS

Dual Rod Design Benefits

This product is no longer available

How to Incorporate Dual-Rod Technology

As shown in **Fig. 1**, an ejector housing cross-section must be designed with the desired plate thickness and necessary ejector stroke. By increasing the lifter core angle, mold designers can achieve faster part ejection and a larger undercut feature. A guide plate is used to retain the second guide rod, as well as align the lifter core rod. Sufficient space around the lifter core rod is needed when placing and sizing the guide plate. Starting from the retaining feature for the guide rod in the guide plate (in this case, a dowel), a line parallel to the centerline of the lifter core rod should be drawn into place.



Ideally, standard components for these lifter systems will be developed ensuring all guide rods feature a round design, as opposed to one with a rectangular cross-section. A sliding assembly, such as a block base, may be used to reciprocate along the plane of the ejector plate assembly as the machine's ejector rod moves though the extent of the ejector stroke.

Both the primary lifter core rod and the second guide rod are aligned and retained by the sliding base within the ejector plate assembly. Since the second guide rod must not move, it is retained further down in the base of the ejector box assembly, as seen in **Fig. 1**. To retain the second guide rod, use a pivoting guide bushing, held in with a pin to the sliding plate. Since the loads acting on the pin are minimal, the pin can be small.

Next, the lifter core must be physically connected to the sliding plate. A mold designer has several options, each with different benefits. If the anticipated loads acting axially on the lifter core will be excessive (the weight of the lifter core itself may even qualify as excessive), then making a tapered surface cut into the sliding plate will enable sufficient backup and support behind the lifter core rod.

By increasing the lifter core angle, mold designers can achieve faster part ejection and a larger undercut feature.

If the expected axial load in the lifter core rod is moderate to low, then a pin or similar device is sufficient to retain the lifter core rod. Mold designers should note, however, that the strength of the assembly will be that of the weakest link; in this case, the joint pins retaining the lifter core rod. Make sure the joint pin and the overall lifter are sized accordingly.

In the final stages of lifter system design, the mold designer adds clearances for the slot used to retain the sliding plate, as well as clearances for the guide and lifter core rods. Use of a guide plate, slide plate and base-mounted retainer bushing eliminates the need of machining tightly toleranced, angled holes into the mold plates themselves.

By using a pivoting guide bushing with sufficient close-fit tolerance to the guide rod, in combination with a loose-fit installation on the base-mounted retainer bushing, the guide rod and sliding base assembly will effectively self-align. When the assembly technician is satisfied that the ejector plate assembly and lifter core system all move freely, the base-mounted retainer bushing can finally be bolted in place, providing the necessary guide rod retention for normal use.

Another benefit to the sliding base design is the rigid backup to the lifter core rod, which allows the use of lifter core cooling (provided the lifter core rod and overall assembly is large enough to accommodate the diametrical size of the intended waterlines, seals and fittings without affecting the lifter rod rigidity required to move the intended lifter core mass). Refer to **Fig. 3** for more detail regarding the addition of cooling to the lifter core assembly.

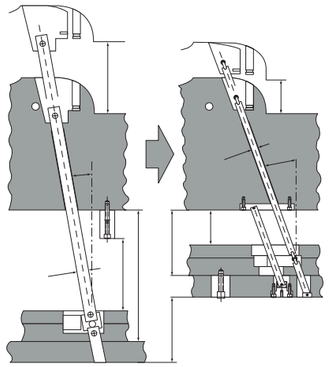

Fig. 3
Example of lifter core assemblies with internal cooling features. This example also shows how two slide base assemblies may be "ganged" together to actuate and support a single large lifter core.

The use of a guide rod to guide the slide base in the moving ejector plate assembly reduces stress on the lifter rod and allows for use of a smaller lifter core assembly. This also means that multiple lifter rods and the attached cores can be ganged together, and are actuated by either more or less slide base and guide rod assemblies, depending on the needs of the application. The level of flexibility and functionality offered by this approach can lead to increased competitive advantage for both the moldmaker and end user.

Many Advantages to Dual-Rod Design

Through incorporating a second guide rod in lifter core assemblies, mold designers can reduce reactionary forces in the mold and enable smaller assemblies. Without the conventional drawback of increased friction and loading due to bending moments, the dual-rod design allows deeper undercuts using steeper lifter core angles – leading to increased cost savings. The ease of design and assembly make it simple to add lifter cores to molding applications, as well as increase the molder's capabilities when a small mold footprint is critical.



DME HYDRAULIC UNSCREWING DEVICES

STANDARDIZED SYSTEMS
FOR MOLDING INTERNAL THREADS

Table of Contents

Hydraulic Unscrewing Device Components...80-83
Calculations/Specifications.....84-86
Applications.....87-88

HYDRAULIC UNSCREWING DEVICE

Components



NOTE:
End caps 1A and 1B, Internal Seals ZD, and NPT Pipe Thread Adapters are included in Base Construction.

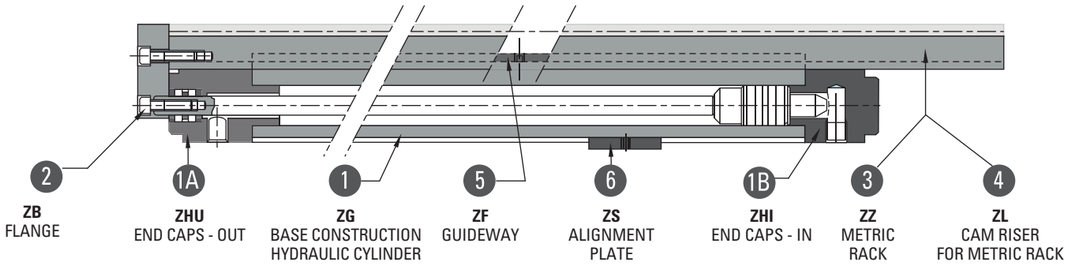

1 Base Construction – ZG

Hydraulic Cylinder



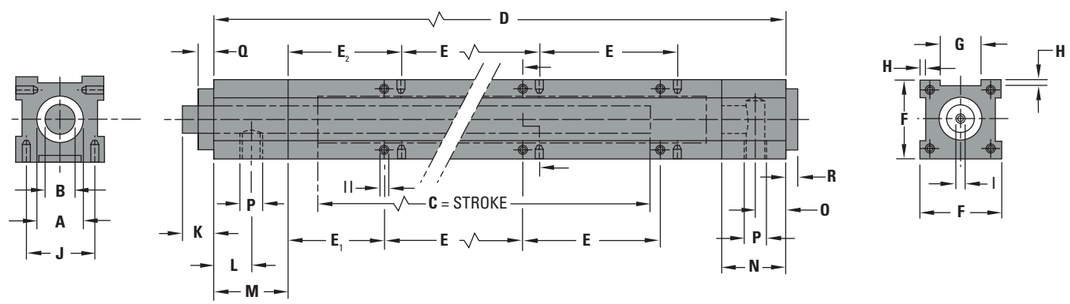

ITEM NO.	A	B	C	D	E	E1	E2	F	G	H	J	K	L	M	N	O	P	Q	R	METRIC THREADS I	METRIC THREADS II
ZG25300	Ø .984	Ø .630	11.811	16.693	3x3.150	2.205	2.598	1.811	.787	.138	1.339	.709	.846	1.693	1.142	.433	¼" BSPP	.354	.236	M 8x1.25x20	SM 5x.80x10
ZG25400			15.748	20.630	3x3.150	4.173	4.567														
ZG25500			19.685	24.567	5x3.150	2.992	3.386														
ZG40300	Ø 1.575	Ø .866	11.811	17.008	3x3.150	2.205	2.598	2.205	1.181	.138	1.732	.866	1.339	2.087	1.063	.512	½" BSPP	.354	.315	M 10x1.5x30	SM 5x.80x10
ZG40400			15.748	20.945	3x3.150	4.173	4.567														
ZG40500			19.685	24.882	5x3.150	2.992	3.386														
ZG63400	Ø 2.480	Ø 1.417	15.748	21.890	3x3.150	4.488	4.882	3.780	1.969	.315	2.756	1.496	.984	2.047	1.378	.630	¾" BSPP	.866	.472	M 16x2.0x45	SM 8x1.25x16
ZG63500			19.685	25.827	5x3.150	3.307	3.701														

NOTE: "A" is the bore size of the ZG Base Construction Hydraulic Cylinder.

HYDRAULIC UNSCREWING DEVICE

Components

6 Alignment Plate – ZS

NOTE:
Two required per Hydraulic Cylinder.

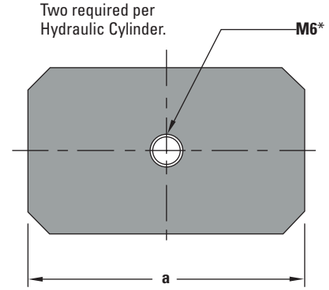

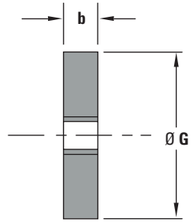

ITEM NO	A	G	a	B
ZS25	Ø.984	.787	1.575	.236
ZS40	Ø1.575	1.181	1.969	.236
ZS63	Ø2.480	1.969	3.150	.591

*M6 Metric socket head screw included.
NOTE: "A" is the bore size of the ZG Base Construction Hydraulic Cylinder.

Standardized system for molding internal threads

- SAE-rack design
- Off-the-shelf replacement parts
- Simplifies mold design
- Applicable to different design styles
- Technical and application support
- Rack sized to provide maximum stroke lengths

2 Flange – ZB



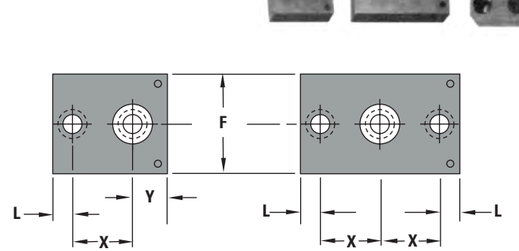

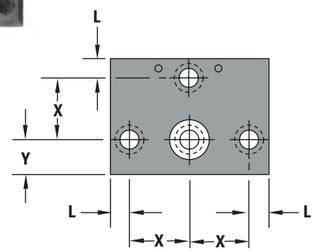

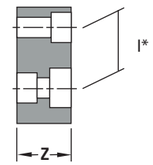

VERSION 1 VERSION 2 VERSION 3

* I IS THE THREAD DIMENSION

ITEM NO.	A	X	Y	F	Z	L	METRIC THREADS I	VERSION
ZB251							2 qty. M 8x1.25x20	Vers. 1
ZB252	Ø.984	1.063	.492	1.811	.787	.413	3 qty. M 8x1.25x20	Vers. 2
ZB253							4 qty. M 8x1.25x20	Vers. 3
ZB401							2 qty. M 10x1.5x30	Vers. 1
ZB402	Ø1.575	1.339	.787	2.205	1.181	.433	3 qty. M 10x1.5x30	Vers. 2
ZB403							4 qty. M 10x1.5x30	Vers. 3
ZB631							1 qty. M 12x1.75x40 / 1 qty. M 16x2.0x45	Vers. 1
ZB632	Ø2.480	2.165	1.181	3.780	1.575	.591	2 qty. M 12x1.75x40 / 1 qty. M 16x2.0x45	Vers. 2
ZB633							3 qty. M 12x1.75x40 / 1 qty. M 16x2.0x45	Vers. 3

*Metric socket head cap screws included with Flange (see I).
NOTE: "A" is the bore size of the ZG Base Construction Hydraulic Cylinder.

HYDRAULIC UNSCREWING DEVICE

Components

3B S.A.E. Rack – ZZ

20 Degree Pressure Angle Gear Teeth



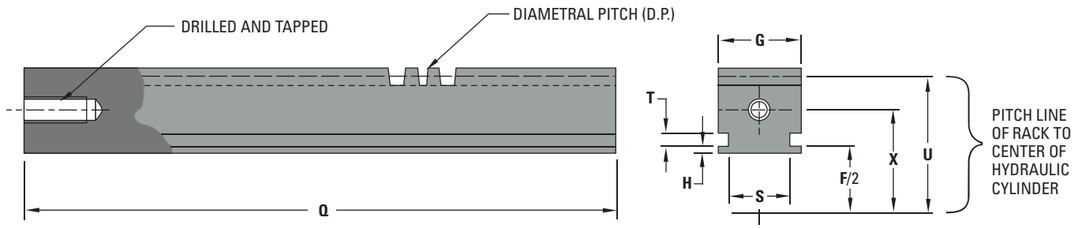

NOTE: Mating Gear to be supplied by moldmaker.

ITEM NO	A	F/2	G	H	Q	S.A.E. DIAMETRAL PITCH	S	T	U	X	METRIC I
ZZ2501	Ø.984	.906	.772	.118	48	12	.551	.250	1.500	1.063	M 8x1.25x20
ZZ4001	Ø1.575	1.102	1.166	.118	48	12	.945	.250	1.750	1.339	M 10x1.5x30
ZZ6301	Ø2.480	1.890	1.953	.295	48	12	1.654	.312	2.625	2.165	M 12x1.75x40

NOTE: "A" is the bore size of the ZG Base Construction Hydraulic Cylinder.

4B CAM Riser – ZL

(for use with S.A.E. Racks)



NOTE: Appropriate angle to be put on by moldmaker.

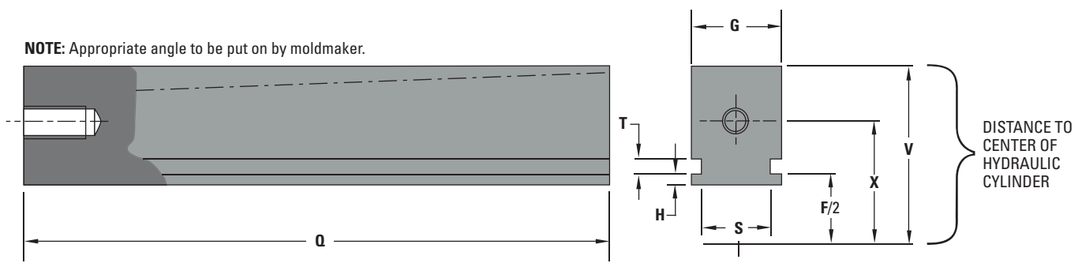

ITEM NO.	A	F/2	G	H	Q	S	T	V	X	METRIC I
ZL2501	Ø.984	.906	.772	.118	48	.551	.250	1.949	1.063	M 8x1.25x20
ZL4001	Ø1.575	1.102	1.166	.118	48	.945	.250	2.539	1.339	M 10x1.5x30
ZL6301	Ø2.480	1.890	1.953	.295	48	1.654	.312	3.937	2.165	M 12x1.75x40

NOTE: "A" is the bore size of the ZG Base Construction Hydraulic Cylinder.

DME

HYDRAULIC UNSCREWING DEVICE

Components

5 Guideway – ZF

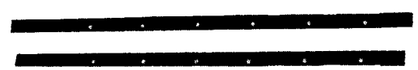

NOTES:
1. Two guideways are required per Rack or per Cam Riser.
2. Only one length is stocked and must be cut to length to fit for shorter Hydraulic Cylinders.
3. Metric flat head screws are included with Guideway (see II).

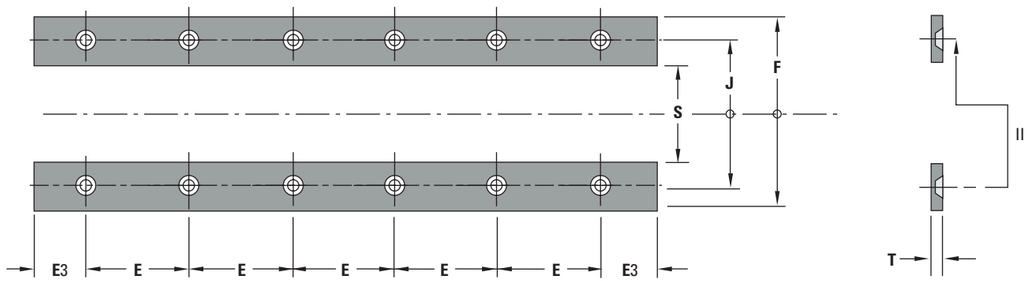

ITEM NO.	A	C	E	E3	F	J	S	T	METRIC II
ZF0001	Ø.984	19.685	5x3.150	2.599	1.811	1.339	.551	.188	SM 5x.80x10
ZF0001	Ø1.575	19.685	5x3.150	2.599	2.205	1.732	.945	.188	SM 5x.80x10
ZF0002	Ø2.480	19.685	5x3.150	1.913	3.780	2.756	1.654	.250	SM 8x1.25x16

NOTE: "A" is the bore size of the ZG Base Construction Hydraulic Cylinder.

MAINTENANCE REPLACEMENT PARTS ONLY

1A End Caps (out) – ZHU

B End Caps (in) – ZHI

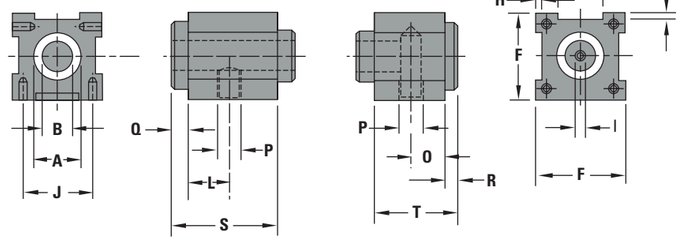

ITEM NO.	L	Q	P	S
ZHU25	.846	.354	¼" BSPP	2.047
ZHU40	1.339	.354	½" BSPP	2.441
ZHU63	.984	.866	¾" BSPP	2.913

ITEM NO.	O	R	P	T
ZHI25	.433	.236	¼" BSPP	1.378
ZHI40	.512	.315	½" BSPP	1.378
ZHI63	.630	.472	¾" BSPP	1.850

NOTE: BSPP = British Pipe Thread Parallel
Ø = Diameter in Inches

M = Metric Socket Head Cap Screw
SM = Metric Flat Head Socket Cap Screw

NOTE: All other dimensions in inches unless otherwise specified.

Seal Kit – ZD



ITEM NO.
ZD25
ZD40
ZD63

Pipe Thread Adapters – ZG

Adapter converts male BSPT to female NPT.

ITEM NO.	CONVERSION
ZG2501	¼" BSPP = ¼" NPT
ZG4001	½" BSPP = ½" NPT
ZG6301	¾" BSPP = ¾" NPT

HYDRAULIC UNSCREWING DEVICE

Calculations/Specifications

Thread Lead = 1/(Threads per inch) = 1/Pitch = Inches/Thread

Thread Length = Length of threads to be removed from the cap

A. Stroke (Inches)

NOTE: Limit switches should be used if possible to limit full cylinder travel. This will extend the seal life inside the hydraulic cylinder.

a) Required revolutions (thread core)

$$= \frac{\text{Thread Length}}{\text{Thread Lead}} + \text{Safety (.5 revolutions minimum)}$$

b) 1. Required stroke – Inches

= Gear Pitch Diameter x π x Required Revolutions

If required stroke is too long, a cogwheel transmission should be used.

2. Length of Rack

$b_2 = x + y + b_1$

c) Stripper stroke (Inches)

= Cylinder Stroke – Required Rack Stroke

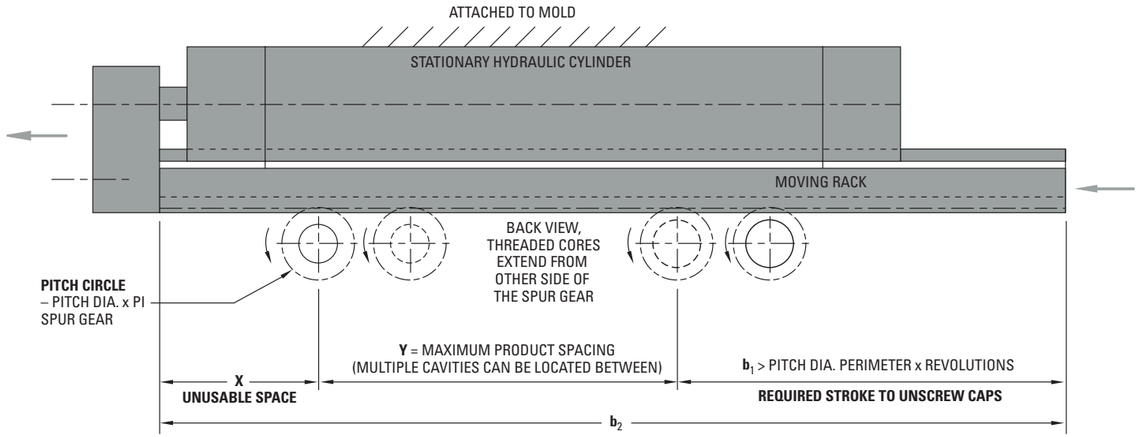

DME

HYDRAULIC UNSCREWING DEVICE

Calculations/Specifications

B. Control Cam Calculation

d) Moving Cam (α)

NOTE: Moves Main Stripper Plate in sync. with unscrewing thread.

$$\tan \alpha = \frac{\text{Thread Lead}}{\text{Gear Pitch Diameter x } \pi}$$

e) Stripper Cam (β)

NOTE: Moves Anti-Rotational Stripper Plate or provides "BUMP" to shake part off.

$$\tan \beta = \frac{\text{Stripper Height}}{\text{Stripper Stroke}}$$

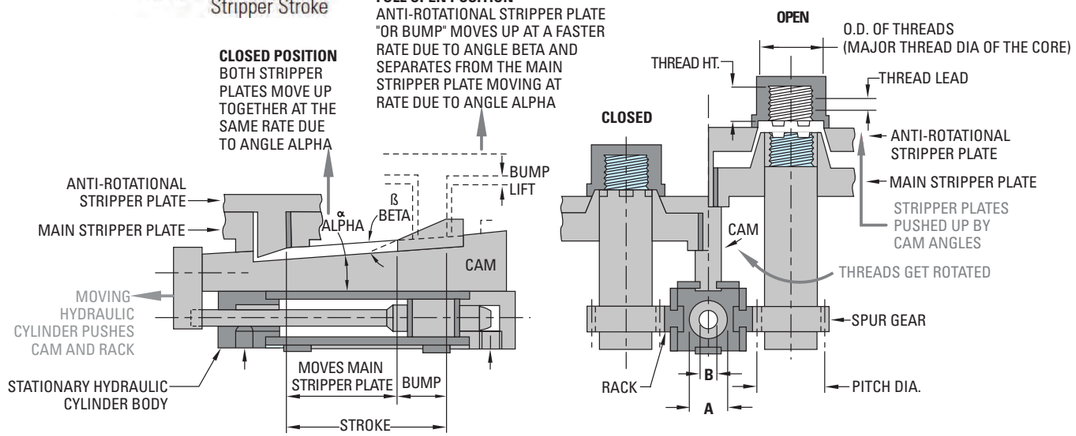

C. Unscrewing Force

These figures should only be used as a guideline, as many other factors will affect the calculation (material, variation of dimensions, material shrinkage, core surface area, temperature, lubricants, friction, etc.).

f) Residual Pressure (PSI)

= 1/100 of maximum injection pressure

g) Effective core surface area (Square Inches or in^2, Outer Core Cylinder Shell)

Flat end of threaded core neglected, x 2 value for 45° triangle thread shape

= major thread dia. of the core x π x thread height x 2

h) Unscrewing torque ($in\text{-}lb_f$)

= Residual Pressure x Effective core surface area x major thread radius of core

i) Unscrewing force rack (lb_f)

$$= \frac{\text{Unscrewing Torque}}{\text{Gear pitch radius}} \text{ X number of cavities}$$

k) Hydraulic force (lb_f)

NOTE: x 1.5 is 50% Safety Factor, if x 1.0 there would be no safety factor.

= Unscrewing Force x 1.5

HYDRAULIC UNSCREWING DEVICE

Calculations/Specifications

Working Cylinder Stroke

Unscrewing force available at different hydraulic pressures (PSI)

Working Stroke

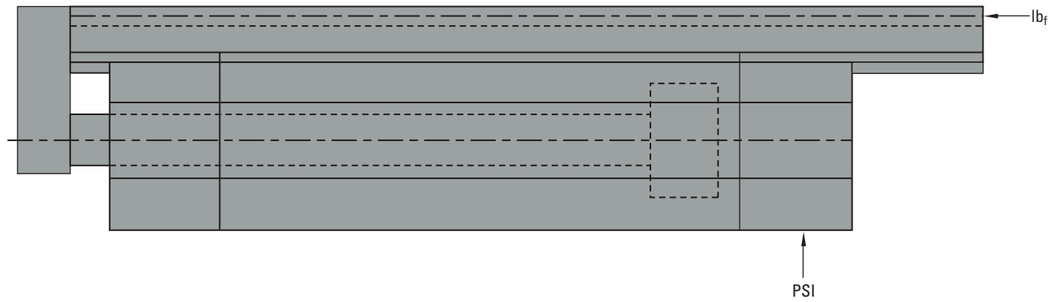

A (PISTON)	B (SHAFT)	1,160 PSI	1,450 PSI	1,740 PSI	2,030 PSI	2,175 PSI
Ø.984"	Ø.630"	887 lb_f	1,102 lb_f	1,326 lb_f	1,529 lb_f	1,664 lb_f
Ø1.575"	Ø.866"	2,248 lb_f	2,810 lb_f	3,395 lb_f	3,957 lb_f	4,204 lb_f
Ø2.480"	Ø1.417"	5,598 lb_f	6,992 lb_f	8,409 lb_f	9,802 lb_f	10,476 lb_f

NOTE: "A" is the bore size of the ZG Base Construction Hydraulic Cylinder.

Returning Cylinder Stroke

Force available at different hydraulic pressures (PSI)

Return Back

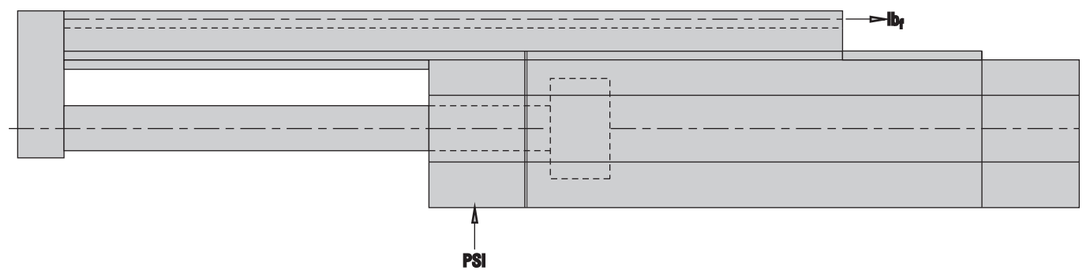

A (PISTON)	B (SHAFT)	1,160 PSI	1,450 PSI	1,740 PSI	2,030 PSI	2,175 PSI
Ø.984"	Ø.630"	517 lb_f	652 lb_f	787 lb_f	922 lb_f	989 lb_f
Ø1.575"	Ø.866"	1,574 lb_f	1,978 lb_f	2,361 lb_f	2,743 lb_f	2,967 lb_f
Ø2.480"	Ø1.417"	3,777 lb_f	4,721 lb_f	5,665 lb_f	6,587 lb_f	7,081 lb_f

NOTE: "A" is the bore size of the ZG Base Construction Hydraulic Cylinder.

HYDRAULIC UNSCREWING DEVICE

Applications

APPLICATIONS

Required DME Component List

Application A

ITEM NO.	QTY	DESCRIPTION
ZG-xx-yyy	1	Hydraulic Cylinder
ZS-xx	2	Alignment Plate
ZB-xx-y	1	Flange-Version 3
ZZ-xx-yy	2	S.A.E. Rack
ZL-xx-yy	1	Cam Riser
ZF-yyyy	6	Guideways for Racks & Cam

Application B

ITEM NO.	QTY	DESCRIPTION
ZG-xx-yyy	1	Hydraulic Cylinder
ZS-xx	4	Alignment Plate
ZB-xx-y	1	Flange-Version 1
ZZ-xx-yy	1	S.A.E. Rack
ZF-yyyy	6	Guideways for Rack

Application C

ITEM NO.	QTY	DESCRIPTION
ZG-xx-yyy	2	Hydraulic Cylinder
ZS-xx	4	Alignment Plate
ZB-xx-y	2	Flange-Version 1
ZZ-xx-yy	2	S.A.E. Rack
ZF-yyyy	4	Guideways for Racks

Application D

ITEM NO.	QTY	DESCRIPTION
ZG-xx-yyy	1	Hydraulic Cylinder
ZS-xx	2	Alignment Plate
ZB-xx-y	1	Flange-Version 2
ZZ-xx-yy	1	Cam Riser
ZF-yyyy	2	Guideways for Cam

NOTE:
Moldmaker should provide limit switches for fully closed and for cylinder extended. Full cylinder extension should be avoided to improve internal cylinder seal life.

A complete Engineering Design Guide, plus separate example, are available at www.dme.net/hud

Application A

Without guiding thread with cam

Application B

With guiding thread

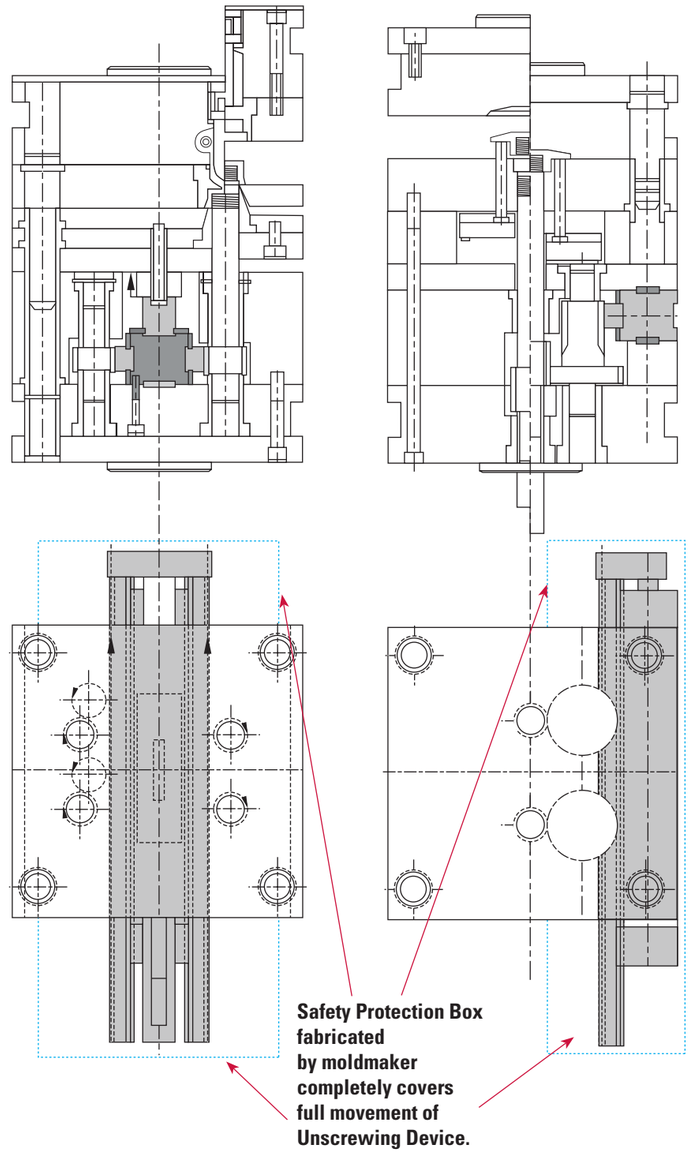

HYDRAULIC UNSCREWING DEVICE

Applications

Application C

With guiding thread

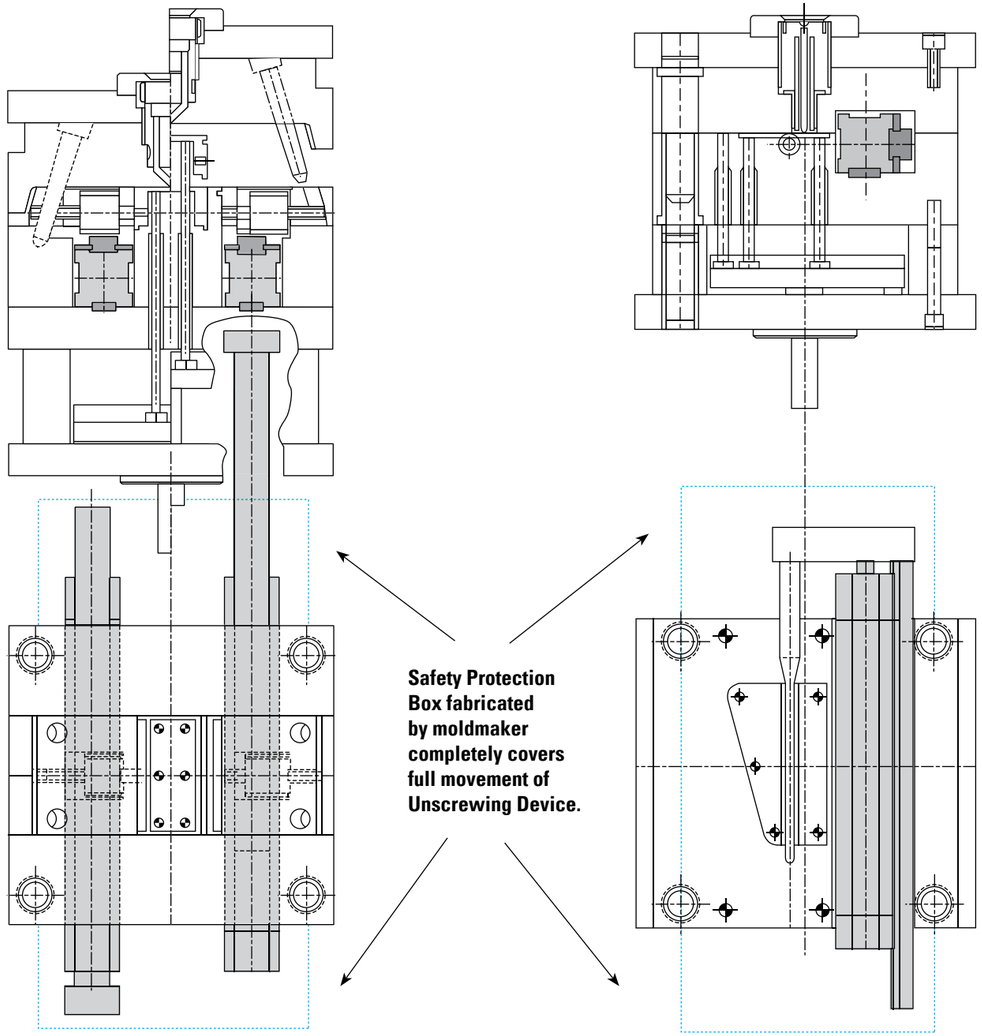

Application D

Long guiding cores

Safety Considerations: Moldmaker must fabricate boxes over the rack areas which move to protect against injury to personnel. Moldmaker must also use safety interlocks to prevent movement of unscrewing device if these protection boxes are removed for any reason. Also, sheet metal should be used to cover areas where the gears are, to prevent damage from loose debris falling between the gears and racks.



DME®

DME COLLAPSIBLE CORE AND EXPANDABLE CAVITY SYSTEMS

EFFICIENTLY MOLD
PLASTIC PARTS REQUIRING
INTERNAL THREADS, UNDERCUTS,
PROTRUSIONS OR CUT-OUTS

COLLAPSIBLE CORE, EXPANDABLE CAVITIES

Table of Contents

DURA Core Collapsible Cores 91-93

S-Core Collapsible Cores 94-96



Standard Expandable Cavity Systems

Cost Savings & FAQ 97

EX-CAV™ System & Mounting Kits 98

Technical Information 99



Custom Expandable Cavity Systems

Features and Benefits 100

Components 101

Typical Applications 102

Cavity and Striker Insert Design 103

Operating Sequence 104

Application Guidelines 105

Quote Request Form 106

Expandable Cavity Application Data

Plastic Part Design 107

Typical Mold Layouts 108



COLLAPSIBLE CORES

DURA Core Collapsible Cores

ADVANCED SOLUTION FOR MOLDING THREADS



Introducing DURA CORE, an innovative collapsible core solution: a ground breaking two-piece spring collapsible core designed for precision and longevity. This advanced collapsible core features a unique sequential collapse mechanism, where the larger and smaller segments operate independently. This distinct design ensures stress-free movement of the smaller segments, significantly enhancing the life-span of the DURA CORE. Our team of DME engineers will meticulously review each part model to tailor-design a DURA CORE that perfectly aligns with your unique application requirements. Utilizing our exclusive patented design, every DURA CORE purposefully eliminates interaction between the larger and smaller segments throughout the collapsing process. This ground breaking characteristic not only prolongs the core's durability but also promotes the production of premium quality parts.

DURA CORES, with their compact design and shorter safety ring, enable effortless cleaning and maintenance. The innovative construction enhances cooling, reduces the overall length, and results in a more compact footprint. Ultimately, the DURA CORES lead to the creation of smaller, simplified molds and elevate part quality. The DURA CORE's two-piece design drastically reduces collapsible core maintenance, a common challenge with traditional spring collapsible cores.

SPRING COLLAPSE COMPARISON

DURA CORE

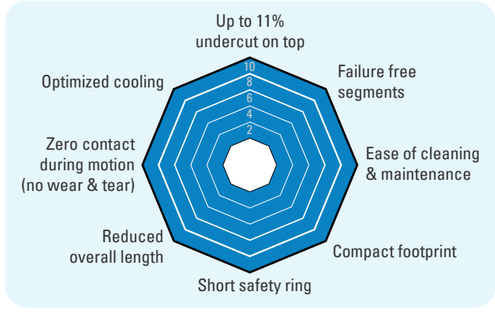

OTHER SPRING COLLAPSIBLE CORES

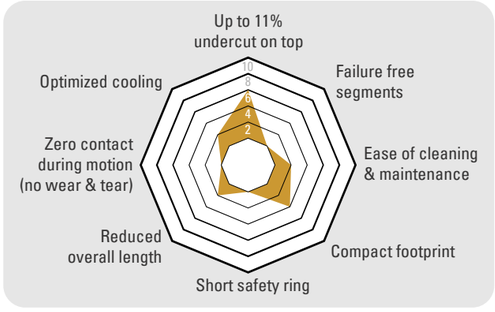

COLLAPSIBLE CORES

DURA Core Collapsible Cores

ADVANTAGE - ZERO CONTACT DURING SEGMENT MOVEMENT

LARGE SEGMENTS LEAD
During the mold closing phase, the center core first engages larger segments, designed to make contact before the smaller ones. This allows larger segments to smoothly lead the opening, ensuring efficient and contact-free movement.

SMALL SEGMENTS FOLLOW
Following the larger segments, the center core smoothly engages the smaller ones, ensuring their synchronized and coordinated efforts. This designpre-vents contact and additional load on the smaller segments during the mold closing phase.

ZERO CONTACT DURING MOTION
In the DURA CORE, the absence of physical contact between large and small segments markedly decreas-es wear and tear. This essential innovation is key to ensuring a longer operational life for the DURA CORE.

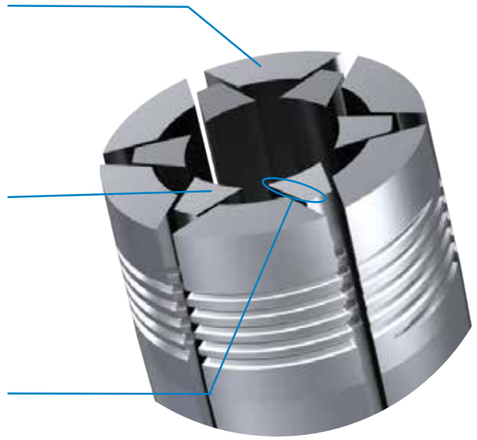

WITH PATENTED TWO-PIECE DESIGN



The two-piece design of the DURA CORE is an innovative feature that significantly enhances the usability and maintenance of the collapsible core in injection molding.

- **Effortless Disassembly:** Simplifies the process, enabling quick access to each component.
- **Easy Inspection and Cleaning:** Offers enhanced accessibility for thorough maintenance
- **Rapid, Secure Reassembly:** Ensures quick and correct reassembly after maintenance
- **Minimize Maintenance Downtime:** Reduces maintenance time, boosting production

ADDITIONAL DESIGN FEATURES



- **Short Safety Ring:** A compact safety ring, securely mounted on a safe plate
- **Straight Core Pin:** The straight core pin design is a key element in optimizing both manufactur-ing and cooling. By facilitating more efficient cooling, it leads to improved overall performance of the core, enhancing the quality of the molded parts.
- **Reduced Overall Length:** The DURA core's reduced length offers considerable space-saving advantages. This design aspect is particularly beneficial in minimizing the mold base stack height, leading to more compact and efficient mold designs.
- **Compact Footprint:** A space-efficient design allows for more cavities in the same-sized molds or the same number of cavities in a smaller mold, thereby maximizing production output per cycle.

COLLAPSIBLE CORES

DURA Core Collapsible Cores

LARGE SEGMENTS LEAD
(Outer part of DURA Core)
Material: **S136/420/Equivalent**
Hardness : **50-54HRC**



SMALL SEGMENTS
(Inner part of DURA Core)
Material: **S136/420/Equivalent**
Hardness : **50-54HRC**

STRAIGHT CORE PIN
(Mounted on a fixed plate)
Material: **D2**
Hardness : **58-60HRC**

SAFETY RING
(Mounted on a safe plate)
Material: **D2**
Hardness : **58-60HRC**

Note: **Safety ring is not necessary if the collapsible core diameter is equal to or greater than 40mm.** Omitting the safety ring in these cases simplifies the mold design and the ejection process.

DURA CORES CAN BE ORDERED WITH OR WITHOUT DLC COATING AND CORE MATERIAL CAN BE CHANGED BASED ON THE APPLICATION.

MULTIPLE VERSIONS DEPENDING ON PART GEOMETRY

The DURACORE can be designed with diverse segment options, providing design flexibility to ensure sufficient collapse for undercuts. The number of segments required is determined by the part size, part shape and the undercut. We offer options of 8, 10, 12, and 16 segments to accommodate a broad spectrum of part sizes, with diameters ranging from 15mm to 150mm.

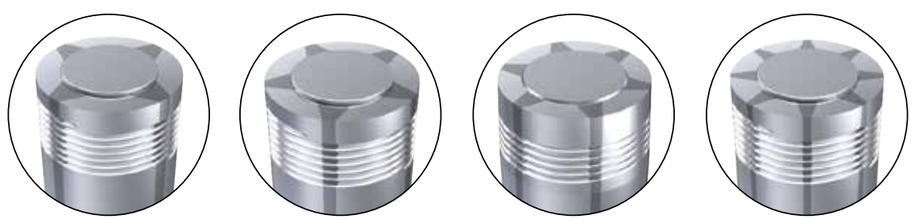

8 SEGMENTS | 10 SEGMENTS | 12 SEGMENTS | 16 SEGMENTS

Scan here for complete DURA Core Collapsible Information

Scan here to view the DURA Core Collapsible Animation

COLLAPSIBLE CORES

S-ore Collapsible Cores

DME S-CORE TYPES

AN ADVANCED SOLUTION TO MOLDING THREADS AND UNDERCUTS

More options more capabilities. The New DME S-Core is a dynamic design that can be produced in 6, 8 or 12 segments enabling parts to be produced as small as 6mm and as large as 400mm. The length and depth of the part feature dictates the number of segments required to release the undercut.

DME Engineers will review each part model and design a DME S-Core for your specific application. Each DME S-Core utilizes **patented safety stops** preventing the folding segments from touching each other during ejection or over travel. This results in a longer lasting collapsible core that produces higher quality parts.

The DME S-Core Dovetail Cores allow for: simplified smaller molds, faster cycle times, improved part quality and reduced mold maintenance over traditional devices. It also helps reduced mold maintenance over traditional unscrewing devices. Making it a better choice for your threading or undercut application.

THE DME S-CORES CAN BE MANUFACTURED IN DIFFERENT VERSIONS.

The DME S-Cores can be manufactured in multiple versions depending on part geometry.

6 Segments

Three (3) large and three (3) small slide segments each. Provides sufficient collapse for undercuts up to 600mm.



Ready to Mold Collapsed for Ejection

8 Segments

Four (4) large and four (4) small slide segments each. Used for intermediate (medium) undercuts.

DME S-Core's can be designed in Oval and Square shapes to compensate for part deformation/shrink.





Ready to Mold Collapsed for Ejection

12 Segments

The smallest possible collapsible core available. Design optimized for producing undercuts on diameters as small as 6mm.



Ready to Mold Collapsed for Ejection

COLLAPSIBLE CORES

S-Core Collapsible Cores

COLLAPSIBLE CORE COMPARISON

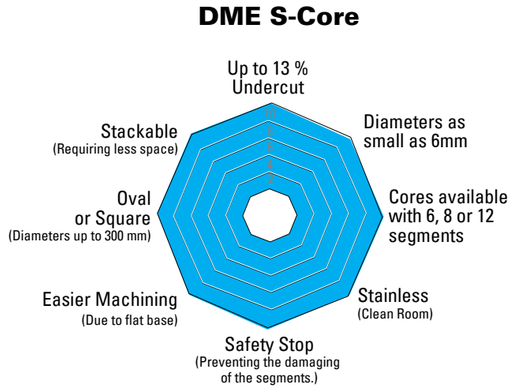

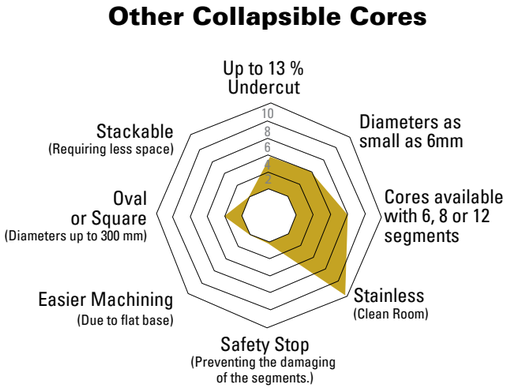

DME S-CORE
WITH PATENTED SAFETY STOP

DME S-Core Safety Stop protects the folding segments from colliding when fully opened or over traveled.



- Unlike other products on the market, the DME S-Core has safety stops built into the corners of the folding segments to prevent them from colliding with one another in the event of over travel.
- The safety stop is incorporated in all of the folding core segments in the head area (between the three retaining rings).
- Folding segments are made from 420 stainless steel and the center guide is made from H13.
- **Safety stops come standard on all DME S-Cores.**

COLLAPSIBLE CORES

S-Core Collapsible Cores

RETAINING RINGS

Want to produce more parts in a smaller space? The DME S-Core Rack System allows for cores to be placed closer together by utilizing a common retaining ring. This is an important feature when space in the mold is limited. This allows designers to create smaller molds to run on smaller presses - saving time and money. Rack systems can be made with up to 8 cores and a minimum spacing of 30mm, however this is dependent on the size of the product being produced and the required under cut depth.







ADDING DETAIL MADE EASY

DME can provide the DME S-Core ready to install with the complete thread or undercut detail already machined in, however in some cases customers like to complete this detailed work. The new DME S-Core is designed with a flat bottom (shown below). When the core is positioned flat it is at location "zero" or "molding position" allowing for ease of setup to perform final machining or EDM.

NOTE: Manufacturing fixture available upon request at no additional cost when purchasing all DME S-CORES.



STYLES EXAMPLES



STANDARD



CUSTOM

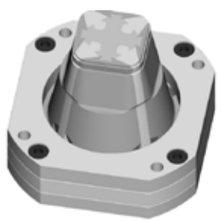

RECTANGLE OPENING



DLC COATED

Scan here for complete S-Core Collapsible Information

Scan here to view the S-Core Collapsible Animation

COLLAPSIBLE CORES

EX_CAV Standard Expandable Cavities

The Expandable Cavity (EX-CAV®) simplifies design and cuts costs to reliably mold and release external profiles on circular plastic parts. The product is ideal for parts such as bottle caps, threads, snap rings, barbs, convex grooves, protrusions, logo details, etc.

Expandable Cavities eliminate the need for traditional slide action assemblies, thereby allowing higher cavitation within the same mold footprint to increase productivity. Depending on the part configuration, the Expandable Cavity's striker insert can be used in the "A" or "B" side of the mold.

- Expandable Cavities with an "A" side striker insert mold the complete part, enabling details such as an outer thread or a snap ring to be released from the mold.
- Expandable Cavities with a "B" side striker insert are for part configurations where undercuts such as barbs and protrusions are located under the part surface.

Cost Savings that Maximize Value

- Simplified mold design
  - Eliminates traditional slides; allows molding of details once considered "un-moldable"
  - Uses existing ejector system for actuation; either mold open or ejection stages the Expandable Cavity forward to release the molded undercut
- Reduces maintenance costs
- Maximizes cavities per mold
  - Compact; often enabling more cavities in the mold and/or the use of a smaller mold base
- Improved mold balance and flexibility in design
- Easily accommodates family molds
- Detail is machined in a one-piece unit eliminating the risk of error or mismatch that can occur with mating slides
- Manufactured with certified alloy steel (A-2) and proprietary processing techniques to ensure long life and dependable performance

Frequently Asked Questions

Q. What are the material types from which an Expandable Cavity can be made, and how much hardness and wear resistance is expected?

A. A-2 tool steel is the default material. It has a hardness of 54-57 HRC. Wear resistance is very good.

Q. Are surface treatments recommended?

A. It depends on the application. The DME engineering staff will review potential options, if needed.

Q. Are there any temperature limitations?

A. Maximum temperature is 260°C/500°F.

Q. What is the expected life cycle of an Expandable Cavity and what maintenance is required?

A. Customers have run millions of cycles. The biggest factor for performance is not the flexing aspect or fatigue as much as cleanliness of the tool over the life of the mold.



STANDARD EXPANDABLE CAVITY SYSTEMS

EX-CAV System & Mounting Kits

EX-CAV System

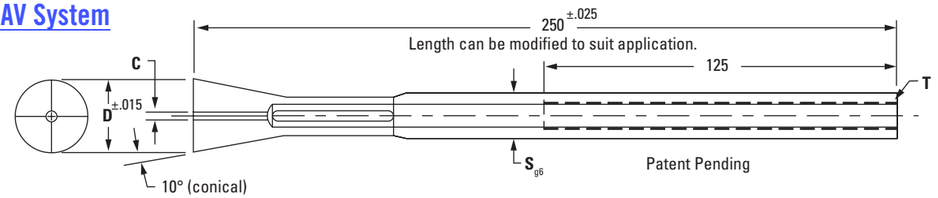

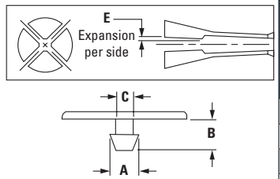

ITEM NUMBER	D EX-CAV DIAMETER	A MAXIMUM PART DIAMETER -10° PER SIDE	B MAXIMUM MOLDING LENGTH	C MINIMUM PART INNER DIAMETER	E EXPANSION PER SIDE	F MIN. WALL THICKNESS	S BODY DIAMETER	T THREAD	X MINIMUM EJECTION STROKE (NEXT PAGE)
EXCAV20	20	14	13	2.5	1.6	3	14	M8	15
EXCAV26	26	18	20	3.5	2.5	4	16	M10	15
EXCAV38	38	30	27	4.0	3.0	4	27	M18	20
EXCAV50	50	40	39	5.5	3.5	5	34	M24	20

All dimensions and tolerances in millimeters. Mounting kits sold separately (see below). Expandable Cavity sizes not shown on this table are available by special order.

Mounting Kits

Hollow Bolt Mounting Kit Includes:

- Key (7 Thk. × 8 × 40)
- Hollow Bolt
- Standard DIN H-13 Ejector Pin (400mm long)
- Spacer

Pin Bolt Mounting Kit Includes:

- Key (7 Thk. × 8 × 40)
- Threaded Bolt/Pin (H-13, 40-44 HRC, 280mm long)
- Spacer

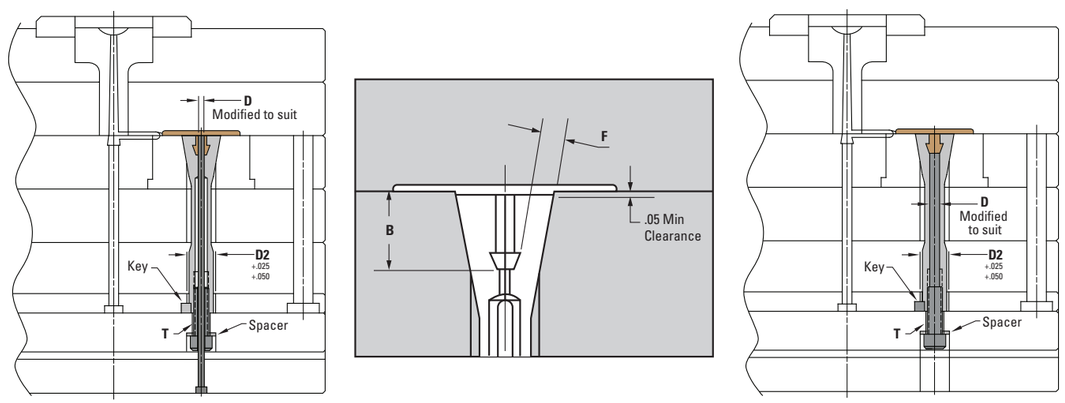

ITEM NUMBER	D NOMINAL PIN DIAMETER	T BOLT SIZE	S SPACER SIZE (ID × OD × THK)	D2	HOLLOW BOLT KIT NUMBER
EXCAV20	3.5	M8-1.25 × 40	8 × 22 × 4	14	EXC20BH
EXCAV26	4	M10-1.5 × 40	10 × 23 × 4	16	EXC26BH
EXCAV38	10	M18-2.5 × 50	19 × 33 × 6	27	EXC38BH
EXCAV50	14	M24-3 × 55	25 × 42 × 6	34	EXC50BH

ITEM NUMBER	D PIN DIAMETER	T BOLT THREAD	S SPACER SIZE (ID × OD × THK)	D2	PIN BOLT KIT NUMBER
EXCAV20	6.0	M8-1.25	8 × 22 × 4	14	EXC20BP
EXCAV26	7.7	M10-1.5	10 × 23 × 4	16	EXC26BP
EXCAV38	14.5	M18-2.5	19 × 33 × 6	27	EXC38BP
EXCAV50	19.8	M24-3	25 × 42 × 6	34	EXC50BP

STANDARD EXPANDABLE CAVITY SYSTEMS

Technical Information

Expandable Cavities simplify tooling design to effectively mold undercuts such as threads, dimples, and protrusions on parts such as snap O-ring caps, plumbing supplies, industrial flanges and valves, electrical fixtures, and much more. The patented Expandable Cavity design eliminates the engineering, maintenance, and machining required for slide action mechanisms which results in smaller molds or higher mold cavitation.

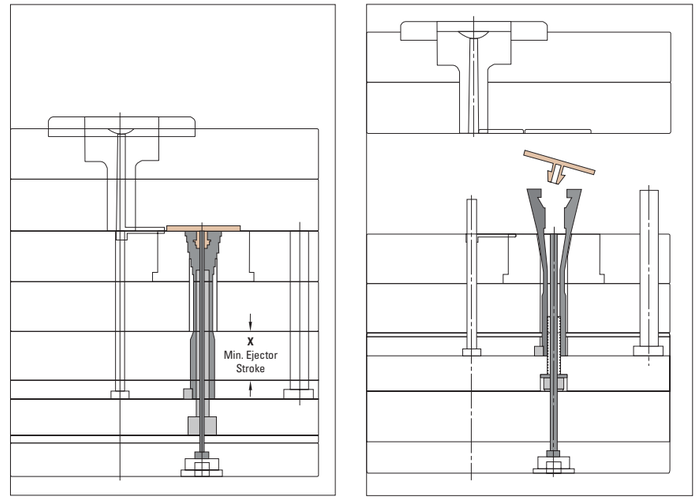

Mold Closed **Mold Open**

Technical Information:

- Available in four standard sizes to satisfy a wide range of applications.
- The Expandable Cavity expands along a conical shape; 10° per side.
- Manufactured from A-2 tool steel (54-57 HRC) for repeatable expansion. For optimal performance, the Expandable Cavity should ride against a hardened insert.
- Expandable Cavities are capable of operating without lubrication. However, treating the Expandable Cavity with an additional coating for wear reduction or corrosion resistance is beneficial.
- Expandable Cavities can be ordered with molding detail for a 'mold ready' component.

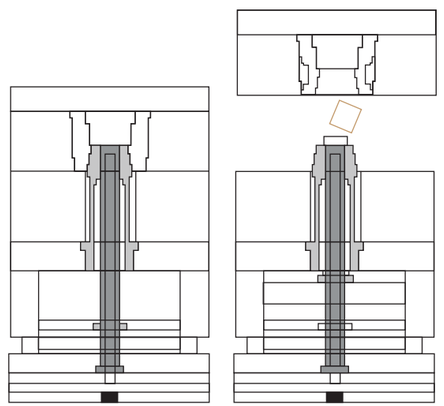

CUSTOM EXPANDABLE CAVITY SYSTEMS

Expandable Cavity System – Features and Benefits

Lowers development and processing costs

The Expandable Cavity saves money at every step – from initial tooling to processing to maintenance. Intelligent engineering reduces or eliminates many costly factors such as complex design details, core slides and required mechanical components, added maintenance and replacement of high-wear items often found in traditional slide action molds.



The Expandable Cavity is maintained under compression during molding.

As the mold opens, segments are released automatically to the expanded position, and the part is released.

U.S. Patent Numbers
5,387,389 D 356,320

Broad range of benefits

Simple design

The revolutionary design and engineering of the Expandable Cavity saves steps and solves problems that have complicated plastics molding for years. In addition to simplifying new tooling design, it can be retrofit to existing molds.

More reliable

Complete reliability of the Expandable Cavity is assured, not only by the simplicity of the design, but also by the use of superior materials and proven proprietary processing techniques. You can count on minimal downtime and higher productivity. The Expandable Cavity has been field tested over several million cycles.

More compact

Using the DME Expandable Cavity allows you to design more cavities in each mold.

Speeds molding process

The Expandable Cavity concept eliminates the need for slide-action mechanisms and the additional machining steps they require. Various part ejection methods can be employed.

Speeds development

The Expandable Cavity concept simplifies the engineering required to design and manufacture a new cavity. This means that your new products go into production in less time than was previously possible.

CUSTOM EXPANDABLE CAVITY SYSTEMS

Components

Typical Expandable Cavity for "A" Side Striker Insert

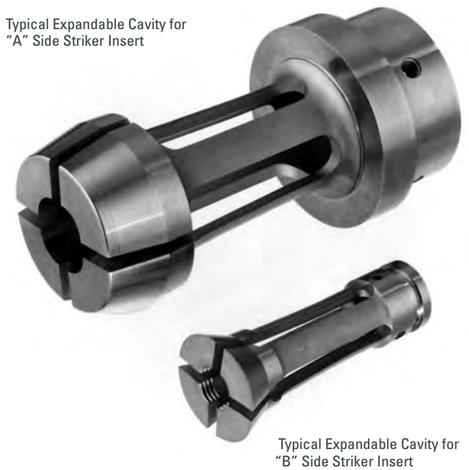

Typical Expandable Cavity for "B" Side Striker Insert

General maintenance

After 100-200 initial shots, the Expandable Cavity should be rechecked to ensure proper mechanical function.

A routine maintenance program of your Expandable Cavity System is recommended after 50,000 to 100,000 cycles. Thoroughly degrease and demagnetize system components. Observe for signs of abnormal wear. A light lubricant such as a P.T.F.E. should then be applied to the Striker Insert, Center Pin and the Expandable Cavity. This will increase the life of the system components. Never use a heavy grease. Re-install Expandable Cavity System.

If this maintenance procedure is performed as described above, several million cycles are easily obtainable.

Expandable Cavity

The Expandable Cavity is typically made of A-2 tool steel, hardened to 54-58 Rockwell "C". The typical tool has four segments which expand radially away, under their own spring force, from the center axis of the tool. In the closed molding position, the precision fit between each segment permits flash-free molding.

Striker insert

The striker insert is made from different types of tool steel. It is typically hardened to 32-45 Rockwell "C" scale, depending on the application. The striker insert has a lower hardness than the Expandable Cavity to ensure the eventual wear will occur on the striker insert and not the detailed Expandable Cavity. Depending on the part configuration, the striker insert can be used in the "A" or "B" side of the mold (see Figs. 1 and 2 for details).

The striker insert must be closely fit to the Expandable Cavity to ensure that in the **mold closed** position the segments are completely sealed against one another. The tolerance on this fit must be held to ±0.0005 inch to ensure flash-free molding.

Interchangeable center pin

The solid center mandrel is the most common type of center pin. It may have an inner cooling channel depending on its size. The center pin provides an internal shut-off with the Expandable Cavity.

Ejector sleeve

An ejector sleeve is commonly used to ensure part ejection from the cavity. The sleeve rides forward over the center pin, once the mold is opened and the cavity expanded. Many times the expansion needed is dependent on leaving clearance for the ejector sleeve.

Expansion limiter sleeve

If part design is such that it could tend to stick in the "A" side of the mold when the Expandable Cavity opens, an expansion limiter sleeve can be used. This sleeve will restrict expansion and retain the part until activation of a stripper plate allows additional expansion prior to part ejection (see **Fig. 3**).

CUSTOM EXPANDABLE CAVITY SYSTEMS

Typical Applications

Fig. 1

With "A" Side Striker Insert

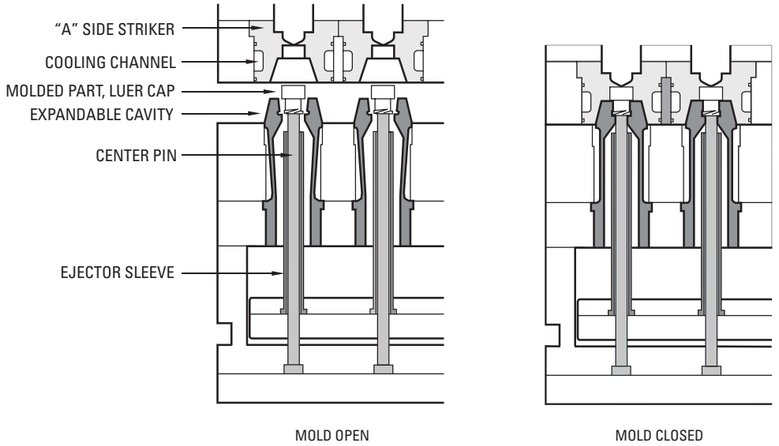

Fig. 2

With "B" Side Striker Insert

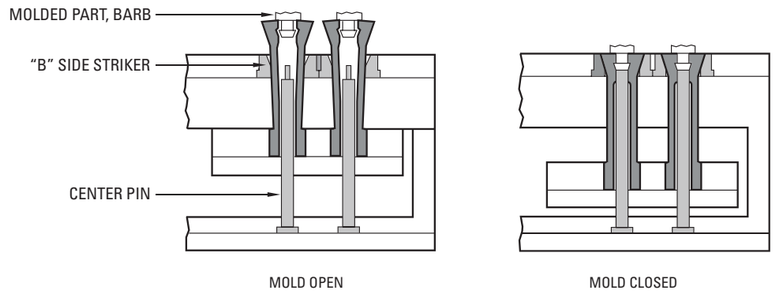

Fig. 3

With "A" Side Striker Insert and Expansion Limiter Sleeve

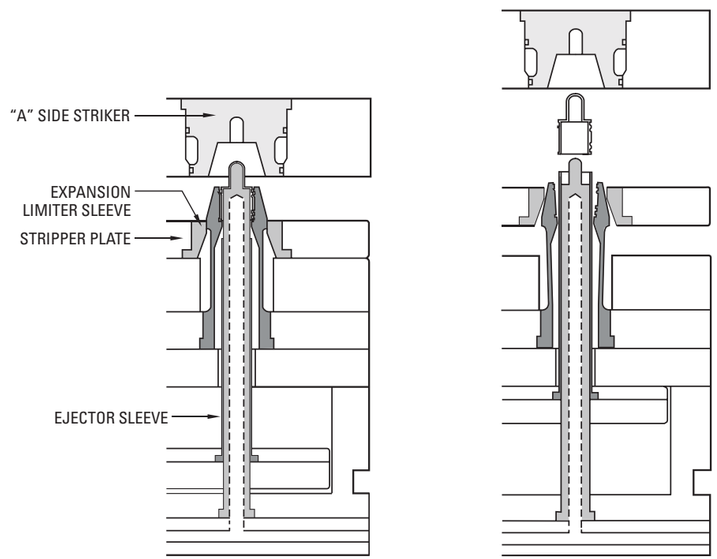

CUSTOM EXPANDABLE CAVITY SYSTEMS

Expandable Cavity and Striker Insert Design

The Expandable Cavity can mold a full 360 degrees around. The most common configuration is four (4) segments that mold 90 degrees each. The Expandable Cavity can also be designed as asymmetrical, such as two segments that mold 90 degrees each and three segments that mold 60 degrees each. (Contact DME Applications Engineering for details.) The amount of expansion varies according to the part requirements and clearances needed.

The general calculations for total expansion necessary are:

1. Calculate the critical expansion per side

The critical expansion (CE) needed to release the undercut is not the radial difference between major diameter (D) and minor diameter (d). For a typical four segment Expandable Cavity, the formula for calculating critical expansion is (see **Fig. 4**):

$$CE = \frac{\sqrt{D^2 - (d^2/2)}}{2} - \frac{\sqrt{2}\,x\,d}{4}$$

2. Calculate the loss of expansion

Loss of expansion = molding length x .050in

The loss of expansion is the amount of expansion the tool loses as you move back from the cavity's face. This is due to the fact that the segments expand radially outward from fixed points on the common base. The outward bend of a typical segment is about 2 to 3 degrees. The tool typically loses 0.050 inch per inch as you move into the Expandable Cavity from the tool's face (see **Fig. 5**).

3. Calculate the total expansion

Total expansion = critical expansion per side
+ loss of expansion + 0.005 clearance

When the mold is closed, the exterior of the Expandable Cavity must be supported by the Striker Insert at least 7/8 of the molding length plus the shut-off, to ensure no flash conditions. Allow for 0.200 inch of shut-off length below the molding length – any more is excessive (see **Fig. 6**).

Fig. 4

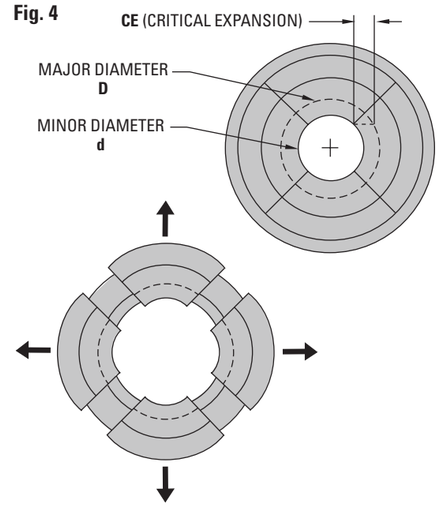

Fig. 5

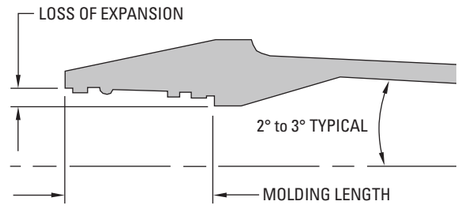

Fig. 6

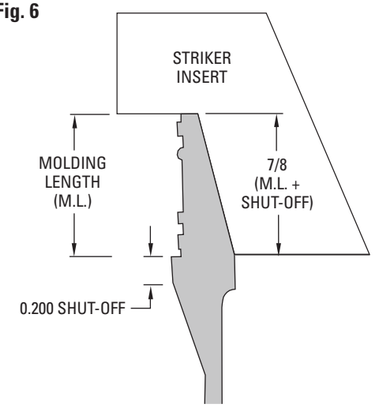

CUSTOM EXPANDABLE CAVITY SYSTEMS

Typical Operating Sequence

Mold Closed

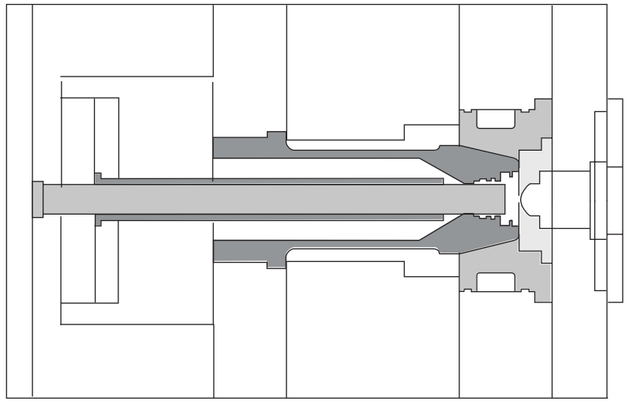

Mold Open, Cavity Expanded

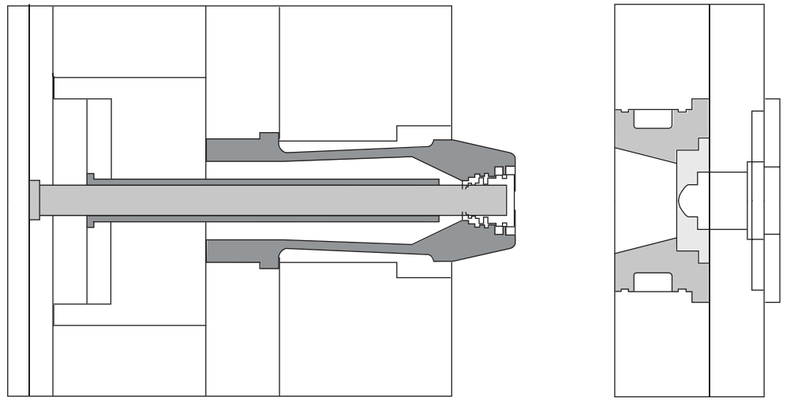

Ejector Forward, Part Ejected

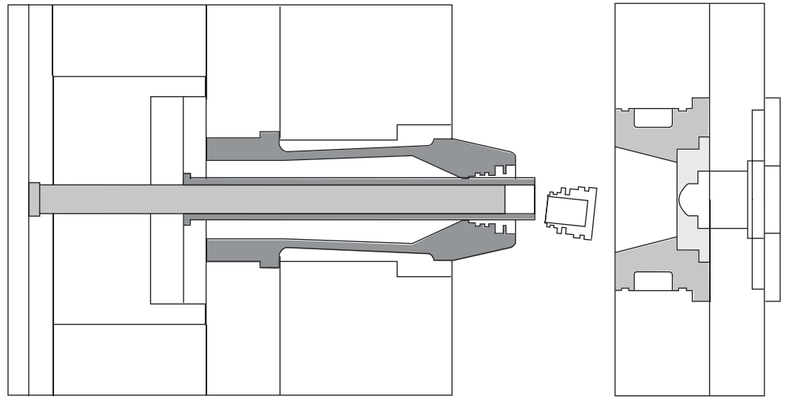

CUSTOM EXPANDABLE CAVITY SYSTEMS

Application Guidelines

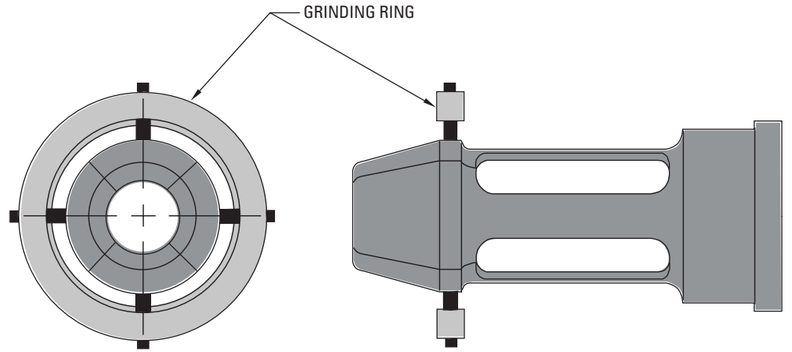

The possibilities are almost limitless

- Size Range: The Expandable Cavity is typically designed for parts with outside dimensions of 1/32 to 3 inches, but more custom designs are also available to suit your overall part size or undercut requirements
- Can be designed for retrofit to existing molds
- Can be designed for use in combination with DME Collapsible Cores, Collapsible Mini-Cores, unscrewing cores or straight pull outs for interior of part
- Can be designed in inch or metric sizes

The Expandable Cavity System may be subject to restrictions in its use for the molding of plastic tamper-indication closures in threaded caps under U.S. Patent No. 5,281,385 of Sunbeam Plastics Corporation. Roehr Tool disclaims any damages or responsibility for the use of its core when used in the method of such patent.

Detailing

Most Expandable Cavity details are usually ground or EDM'd. It is important when grinding to flood tool with suitable coolant for hardened tool steels. Do not grind with a loaded wheel (dress wheel frequently). The wheel must be of a soft grade (60J, 46J, etc.). When grinding make sure the Expandable Cavity is completely closed in a true circle by using the grinding ring supplied, as shown here.

After all finish grinding, polishing and EDM'ing work, be sure to demagnetize the Expandable Cavity to prevent adhesion of any metal particles that might find their way into the cavity during molding.

NOTE: DME does not provide the part configuration detailing or machining. We can direct you to an appropriate source for this service if required.

How to order

The Expandable Cavity is designed and constructed based on part configuration and mold design requirements. For a quotation, copy and fill out the Quote Request Form on the next page and mail, fax or email to the address or fax number shown on the form. If you also include a part print and/or mold design, DME can assist you in determining the feasibility of molding with the Expandable Cavity and review your overall mold design.

EXPANDABLE CAVITY SYSTEMS

Applications Engineering Quote Request Form

QUOTE FAX HOTLINES AVAILABLE or email customer_service@dme.net

United States 888-808-4363 • Canada 800-461-9965 • International 248-398-7394

Company name: _____ **DME account #:** _____

Contact name: _____ **P.O. #:** _____

Phone: _____ **FAX:** _____

Address: _____ **E-mail:** _____

City: _____ **State/Province:** _____

ZIP/Postal Code: _____ **Country:** _____

SHIPPING METHOD:

☐ **UPS Ground** ☐ **UPS 2nd Day Air** ☐ **UPS Next Day** ☐ **FedEx** ☐ **Other** _____

Expandable Cavity Requirements

I. POLYMER SPECIFICATIONS:

A. What is the material to be molded? _____

B. What is the process temperature ? _____ ☒ Filled ☒ Unfilled ☒ Glass ☒ Mineral

II. DIMENSIONS OF EXPANDABLE CAVITY: (Part print is required)

A. Specify largest diameter to be molded _____

B. Specify smallest diameter to be molded _____

C. Specify major diameter of undercut or thread _____

D. Specify minor diameter of undercut or thread _____

III. MOLDED PART LENGTH:

A. Molding Length: _____ (Within the Expandable Cavity)

B. Mold Shut-off: .200 (Shut-off land below part)

IV. EXPANSION REQUIREMENTS: (See Expandable Cavity and Striker Insert Design)

A. Critical Expansion per side: _____

B. Loss of expansion (.050in/in): _____
Multiply molding length (Distance from top of Expandable Cavity to bottom of last undercut) by .050in

C. Clearance (Air) between plastic and steel upon expansion: .005

V. MOLD LAYOUT

A. Distance from gate (center to center): _____

B. Number of cavities: _____

☒ Retrofit ☒ New Mold

EXPANDABLE CAVITY SYSTEMS

Plastic Part Design

The Expandable Cavity was designed to produce external details. All commonly used thermoplastic molding polymers, including filled materials and engineering polymers, have been successfully molded with the Expandable Cavity. When using a corrosive polymer such as PVC, the Expandable Cavity must be surface treated with a protective coating. To prevent loss of expansion properties in the Expandable Cavity, the surface treatment process should not exceed a temperature of 600° F.

Good plastic design practice should be observed to avoid such conditions as distortion, sink marks, etc. These problems and their solutions are identical to those found in conventional moldings.

All undercuts, protrusions, windows, etc. will typically include two to five degrees of draft. The bottom edge of the part must also have approximately two to five degrees of draft. Also, if molding is required on the top of the Expandable Cavity, two to five degrees of draft needs to be included. This is necessary because the segments flex radially away from the molding position in an arc. The draft allows the segments to expand freely.

NOTE: The amount of draft varies with tool design. Changes in tool design (length, body diameter, etc.) can minimize draft requirements.

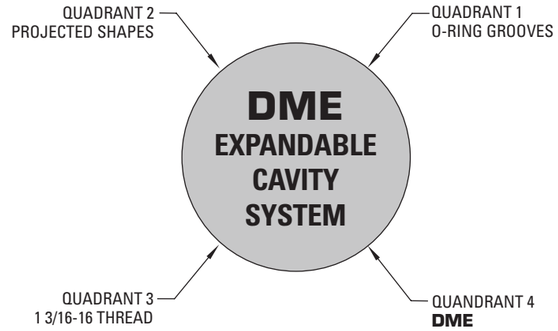

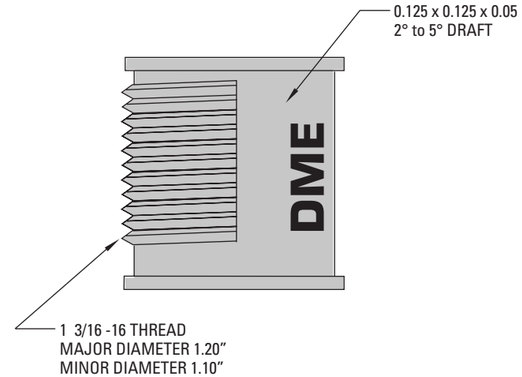

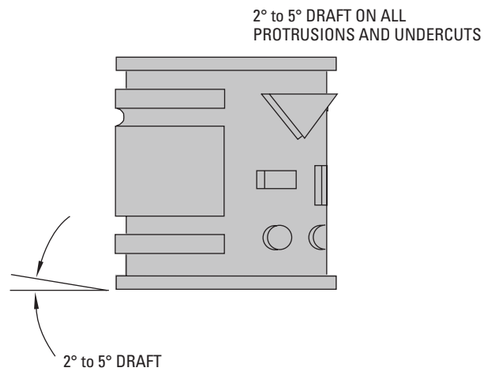

NOTE: Demo part has four (4) different quadrants of detail (call DME for a sample).

EXPANDABLE CAVITY SYSTEMS

Typical Mold Layouts

Go from this …

Mold Layout with Conventional Slide Mold

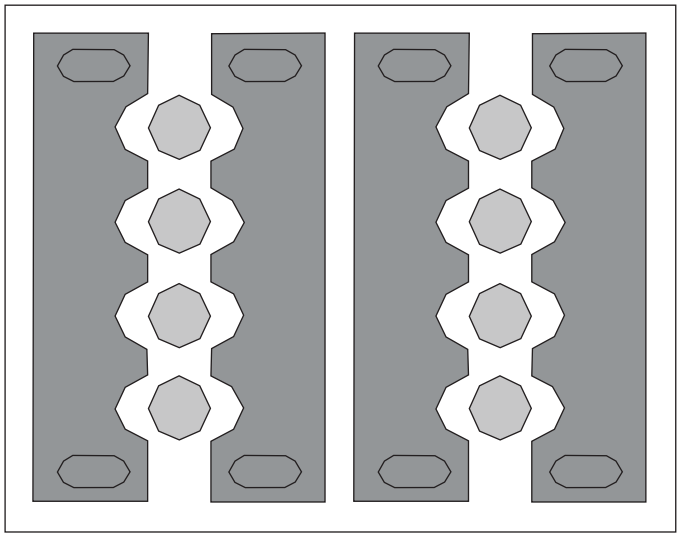

Radial Mold Layout with Expandable Cavity

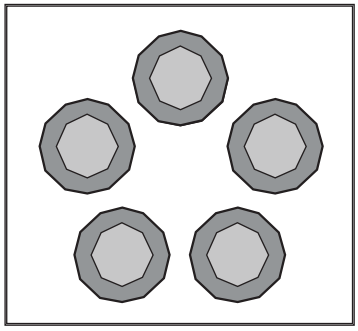

Nest Mold Layout with Expandable Cavity

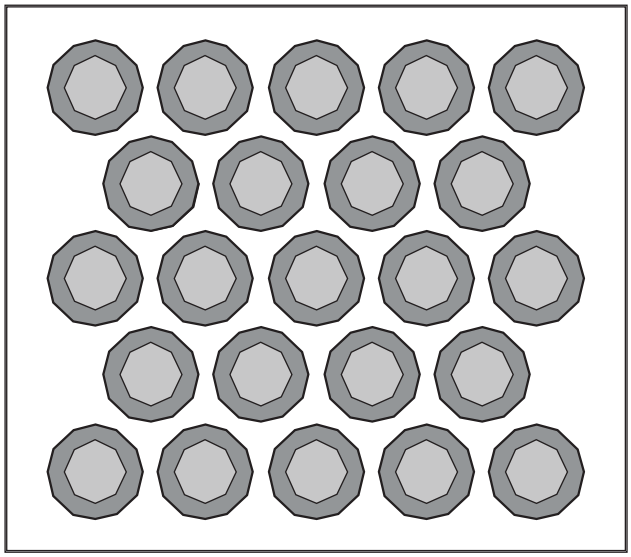

to this …

Reduced Mold Size with Expandable Cavity

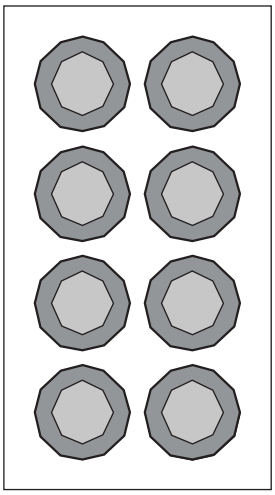



DME HELICAL GEAR STACK MOLD SYSTEMS

COST-EFFECTIVE SOLUTION FOR INCREASING CAPACITY

HELICAL GEAR STACK MOLD SYSTEMS

Comprehensive Options



DME delivers critical expertise with mold technology, while Milacron offers high-performance injection molding machinery when the application demands it.

The combination is unbeatable.

With DME Stack Mold Systems – the choice is yours. Our systems feature complete flexibility – built around a family of product standards that simplify implementation. Only DME gives you this wide range of choices. And, because they're from DME, you can expect reliability, advanced engineering, and outstanding performance.

Turnkey Systems Deliver a Total Solution

When you choose DME as your partner for Stack Mold Systems, you're choosing a total solution. How big that solution is, will be your choice. We can deliver a turnkey molding system (excluding the cores and cavities) including a molding machine.

Our turnkey systems may include:

- Mold bases
- Hot runner systems and controllers
- Components – including centering and actuation devices
- System assembly
- Injection molding machines

HELICAL GEAR STACK MOLD SYSTEMS

Stack Mold Components

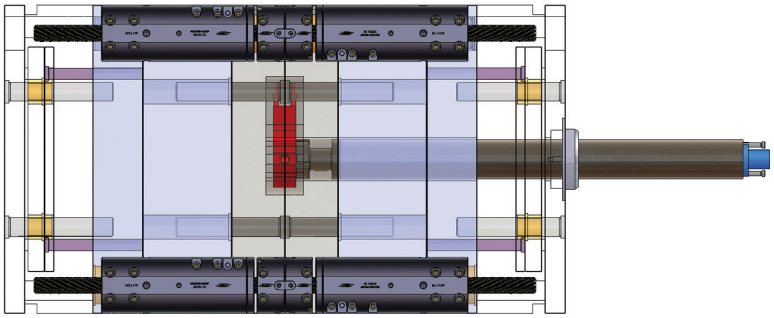

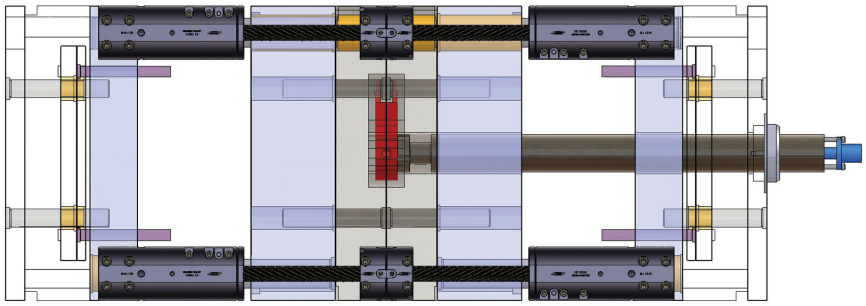

Mold is shown with Helical Gear centering device in closed and open positions.

Stack Molds

Today's plastics processor has to do more with less – less labor, less capital investment, less floor space, and less time. DME can help with comprehensive options for high productivity. Stack Mold Systems can double the output of standard, single face molds between the same tie bar distance. Because the cavity forces cancel each other out, the necessary clamping forces for stack molds are essentially the same as for single face molds.

Key benefits of Stack Mold Systems include:

- Cost-effective solution for increasing capacity
- Optimum use of shop floor space and machine capacity
- Expanded molding capacity without capital expenditures
- More output per unit of shop floor labor – higher productivity in your operation

Stack Mold Systems are ideally suited for automotive applications, housewares, packaging, caps and closures, cutlery and electronic industries. Any applications that require mating parts (container and lid, top and bottom, or left and right) or strict color matching are also candidates for increased molded part quality and molding productivity through stack molds.

Engineering Expertise Ensures Success

The DME design and engineering team delivers over six decades of experience with injection molding, and injection mold design. Our engineering services can quickly scale to meet the specific needs of your program. Our designers can assist in the choice and application of our rigorously engineered and proven Stack Mold Systems and Components. We can offer the entire stack mold design, configuration, and assembly – including the mold base, centering and actuating components, hot runner system, and temperature controller.

All DME Stack Mold components have been designed for optimal utility and reliability. Because DME delivers industry-leading expertise with Stack Mold Systems, we're able to provide a world class, integrated solution with all systems and components operating at optimum efficiency.

HELICAL GEAR STACK MOLD SYSTEMS

Stack Mold Components

HELICAL GEAR

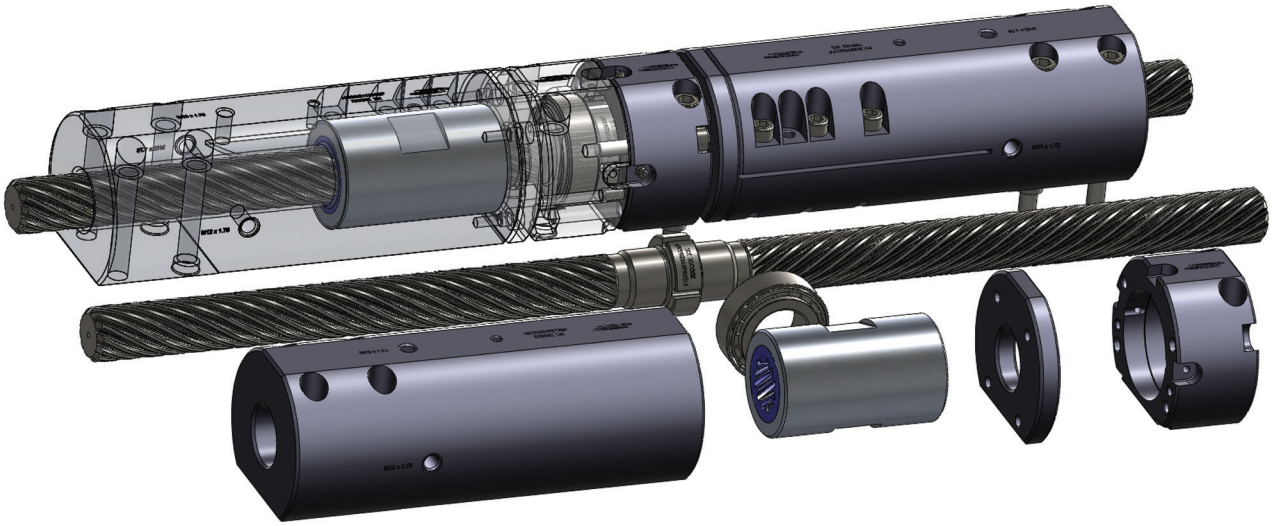

Standard Stack Mold Systems

DME offers a centering actuation system, Helical Gear, to suit your specific requirements. A choice of center support configurations is available – including support on the tie bars (top, bottom, or both), on the machine ways, or on both the ways and tie bars.

Standard Stack Mold Components

DME also supplies a full line of standard Stack Mold Components. These standard components are available off-the-shelf and can be ordered for immediate shipment to meet your needs. Experienced mold designers can customize any Stack Mold System to meet their needs by using our easy-to-follow standards.

Pre-Engineered Subassemblies

Centering Devices – to synchronize two or more parting line openings.

- Helical Gear

Center Supports – to support the center portion of the stack mold while the mold is open.

- Low-cost bronze shoes
- Frictionless Smart Line Center Support System

Hot Runner Systems – to deliver the plastics from the machine barrel to the cavities.

- Sprue bars
- Stack manifold
- Nozzles

HELICAL GEAR STACK MOLD SYSTEMS

Helical Gear Systems

Helical Gear Centering Device Advantages

- Easily adjustable to compensate for machining inaccuracies or stack height adjustments
- Small footprint to accommodate side entry robots and/or secondary injection units
- Light-weight assemblies with aluminum housings for easy assembly and maintenance
- Built-in mold seizing safety mechanism: Nylon thread designed to fail before damage to mold or press
- Standardized components to simplify design, build, and maintenance
- Three (3) sizes to accommodate all applications
- Wear items are in stock
- Modular design
- Metric sizes

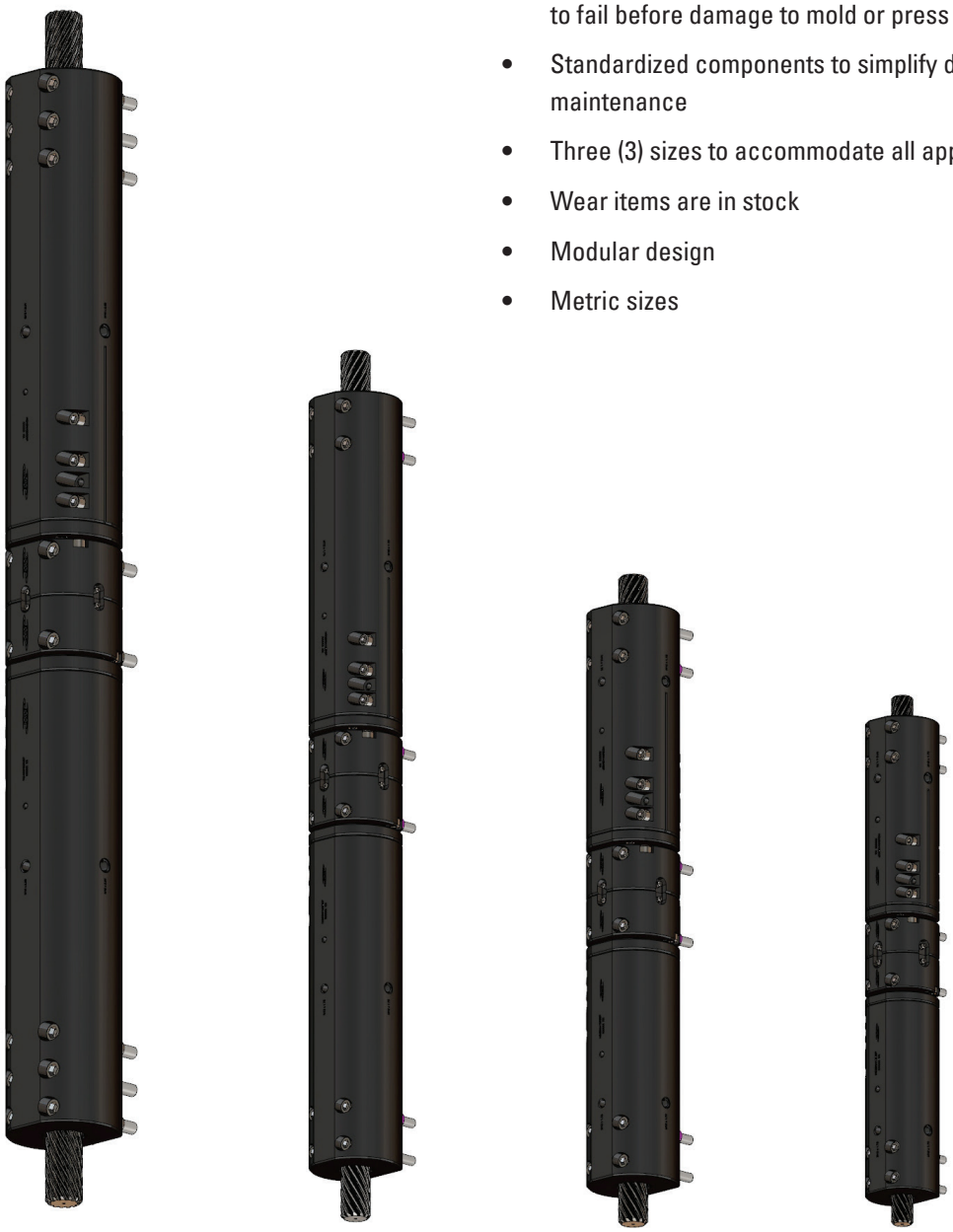

HELICAL GEAR STACK MOLD SYSTEMS

Helical Gear Components

DME Helical Gear housings and assemblies greatly simplify the design and development of stack molds – leaving you more time to concentrate on core and cavity details.

HELICAL GEAR CENTERING DEVICE – complete assembly

HELICAL GEAR SHAFT – available in (3) sizes

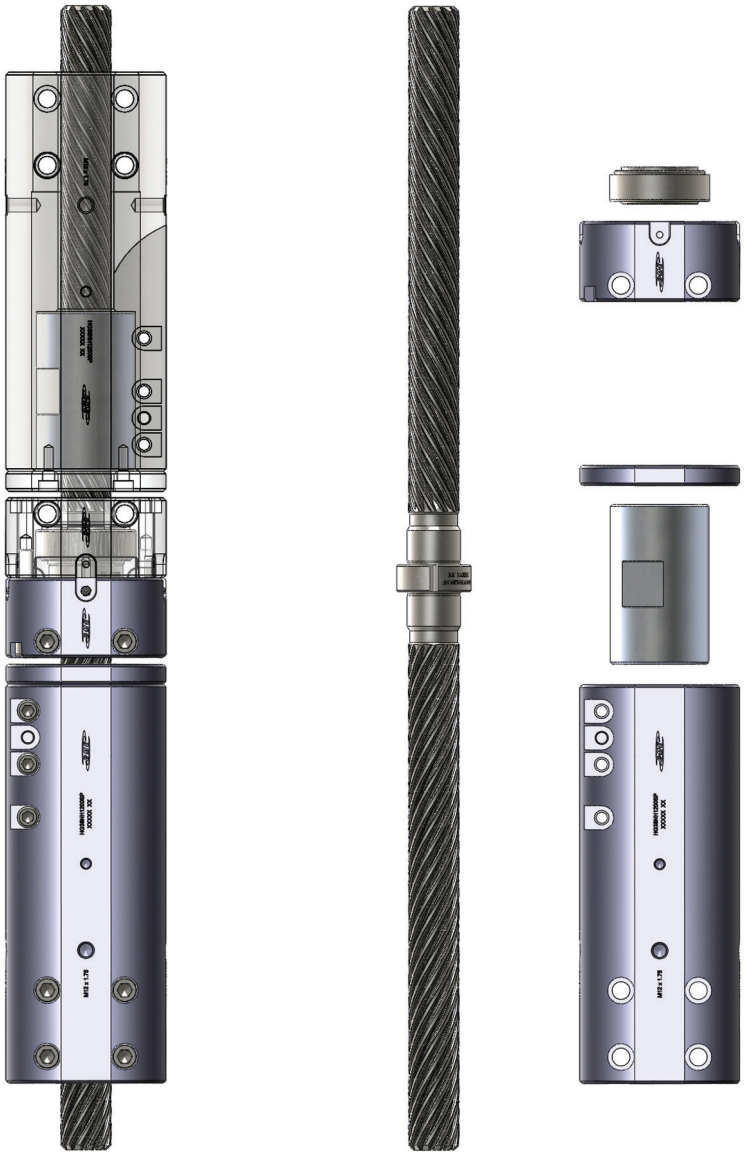

ROLLER BEARING

ROLLER BEARING HOUSING

NUT HOUSING COVER

NYLON NUT – available in left- or right-hand threads

NUT HOUSING – cut to length to meet the requirements of your application

NOTE: Number of assembly screws and tubular dowels vary with Helical Gear size.

HELICAL GEAR STACK MOLD SYSTEMS

Helical Gear Calculations

DME Helical Gear Stack Mold Centering Device Calculation Sheet

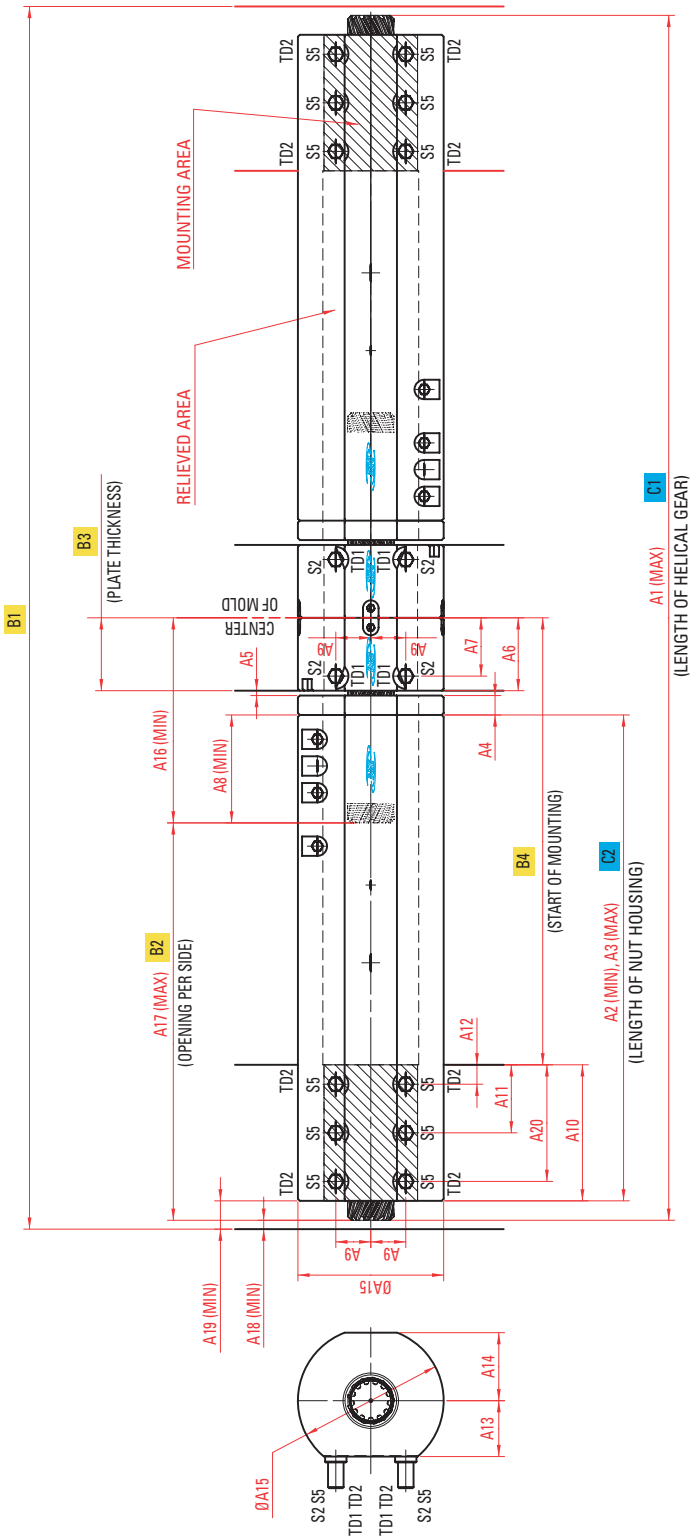

NOTE: All dimensions are in millimeters (mm).
Number of assembly screws and tubular dowels vary with Helical Gear size.

HELICAL GEAR STACK MOLD SYSTEMS

Helical Gear Calculations

C1 = 2 x (A16 + B2) (Final Length of Helical Gear)

IF B4 + A10 + A19 <= 0.5 x B1

Y -> OK

N -> ERROR: NUT HOUSING IS TOO LONG: INCREASE B1 OR REDUCE B4

IF B3 >= A6

Y -> OK

N -> ERROR: CENTER PLATE IS TOO THIN: INCREASE B3

IF B2 + A16 + A18 <= 0.5 x B1

Y -> OK

N -> ERROR: GEAR IS TOO LONG: INCREASE B1 OR REDUCE B2

IF C1 <= B1 – 10

Y -> OK

N -> ERROR: GEAR IS TOO LONG: INCREASE B1

IF C1 <= A1

Y -> OK

N -> ERROR: GEAR IS TOO LONG: REDUCE B2

C2 = B4 + A10 – A6 – A5 – A4 (Final Length of Nut Housing)

IF C2 >= A2

Y -> OK

N -> ERROR: NUT HOUSING IS TOO SHORT: INCREASE B4

IF C2 <= A3

Y -> OK

N -> ERROR: NUT HOUSING IS TOO LONG: REDUCE B4

IF C2 <= 0.5 x B1 – A6 – A5 – A4 – A19

Y -> OK

N -> ERROR: NUT HOUSING IS TOO LONG: INCREASE B1 OR REDUCE B4

DME is with you every step of the way!

Send your request or questions to DME Applications Engineering: appl_eng@dme.net, and we will take it from there.

INPUT DATA				
	HG28-1000	HG38-1200	HG38-1500	HG48-2000
B1				
B2				
B3				
B4				

OUTPUT DATA				
	HG28-1000	HG38-1200	HG38-1500	HG48-2000
C1				
C2				

MOUNTING SCREWS AND DOWELS					
		HG28-1000	HG38-1200	HG38-1500	HG48-2000
S2	Socket Head Cap Screw	M10 × 1.50 × 75 (Part # M1075SH)	M12 × 1.75 × 110 (Part # M12110SH)	M12 × 1.75 × 110 (Part # M12110SH)	M16 x 130mm (Part# M16130SH)
S5	Socket Head Cap Screw	M10 × 1.50 × 75 (Part # M1075SH)	M12 × 1.75 × 110 (Part # M12110SH)	M12 × 1.75 × 110 (Part # M12110SH)	M16 x 130mm (Part# M16130SH)
TD1	Tubular Dowel	Ø14 × 10 (Part # PH1410)	Ø18 × 12 (Part # PH1812)	Ø18 × 12 (Part # PH1812)	Ø22mm x 12mm (Part # PH2212)
TD2	Tubular Dowel	Ø14 × 10 (Part # PH1410)	Ø18 × 12 (Part # PH1812)	Ø18 × 12 (Part # PH1812)	Ø22mm x 12mm (Part # PH2212)

CONSTANT DIMENSIONS				
	HG28-1000	HG38-1200	HG38-1500	HG48-2000
A1	1000	1200	1500	2000.0
A2	245	296	296	400.0
A3	436	520	670	900.0
A4	12	15	15	20.0
A5	5	5	5	5.0
A6	47	60	60	75.0
A7	37	48	48	60.0
A8	60	75	75	100.0
A9	22	29	29	36.0
A10	70	90	90	140.0
A11	55	70	70	70.0
A12	15	20	20	20.0
A13	35	45	45	57.5
A14	45	57	57	70.0
A15	95	120	120	150.0
A16	124	155	155	200.0
A17	376	445	595	800.0
A18	5	5	5	5.0
A19	5	5	5	5.0
A20	—	—	—	120.0

HELICAL GEAR STACK MOLD SYSTEMS

Helical Gear Components

Helical Gear
Helical Gear Shaft

Material: Pre-Hardened Steel

Variable length; cut to match your application.

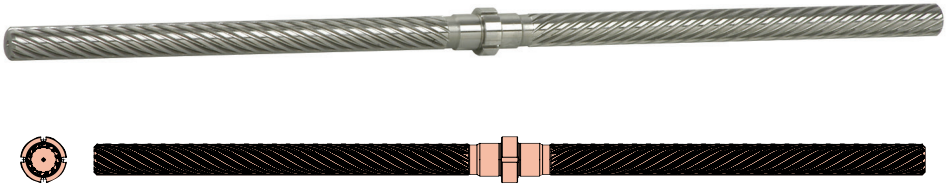

Alignment Rod

Material: Steel

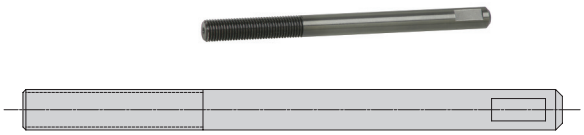

Shipping Strap

Material: Steel

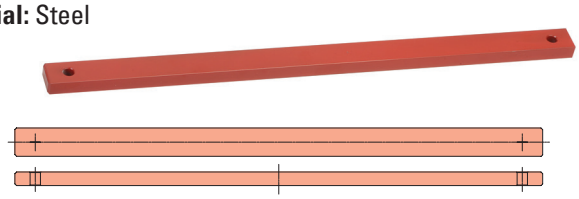

Roller Bearing Housing

Material: Aircraft Aluminum

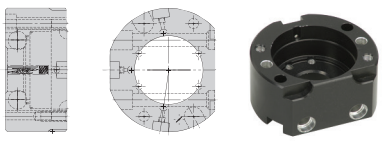

Tapered Roller Bearing

Material: Industry Standard



Nut Housing End Cap

Material: Aircraft Aluminum

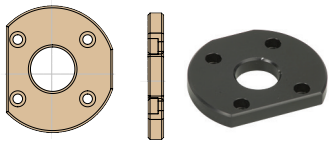

Nylon Nut (left and right)

Material: Outer Sleeve – Aluminum;
Nylon Insert – High-strength nylon

Nylon insert provides lubricity and an engineered fail-safe. The nylon insert will strip from the outer sleeve should the stack mold seize. This minimizes the potential of costly damage to the mold.

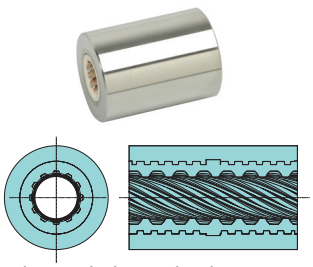

NOTE: It is recommended that a set of spare nylon nuts be kept on hand.

ITEM NUMBERS		
HELICAL GEAR SHAFT		
HG28SH1000	HG38SH1200	HG48SH2000
—	HG38SH1500	—
NUT HOUSING END CAP		
HG28NHC	HG38NHC	HG48NHC
NYLON NUT		
HG28NNL (left)	HG38NNL (left)	—
HG28NNR (right)	HG38NNR (right)	—
BRASS NUT		
HG28BNL (left)	HG38BNL (left)	HG48BNL (left)
HG28BNR (right)	HG38BNR (right)	HG38BNR (right)
ROLLER BEARING HOUSING		
HG28RBH	HG38RBH	HG48RBH
TAPERED ROLLER BEARING		
HG28RB	HG38RB	HG48RB
ALIGNMENT ROD		
HG28AR	HG38AR	HG48AR
SHIPPING STRAP		
HG28ST	HG38ST	HG48ST

ESTORE & CAD LIBRARY

DME – Your One Stop Shop For Mold Technologies

CLICK AND SAVE - BOTH TIME AND MONEY

The eStore is the easiest, most efficient way to purchase everything you need for your companies operations and having the information on them at your fingertips.

What are the benefits of being a registered estore user?

- Free ground UPS freight on orders over $50.00
- Faster checkout process
- Order Review and Tracking Status
- Build and validate lists of frequently purchased parts

Need to get registered? That's easy... visit store.dme.net and click on Register in the upper right corner.

eSTORE
store.dme.net

The DME CAD Imbedded Parts Library

DME has over 65,000 CAD files available for everything from mold bases and MUD inserts to hot runner components, temperature control connectors as well as thousands of mechanical components. **With 150 native and neutral file types available, this means you have access to 9 million different file options.**

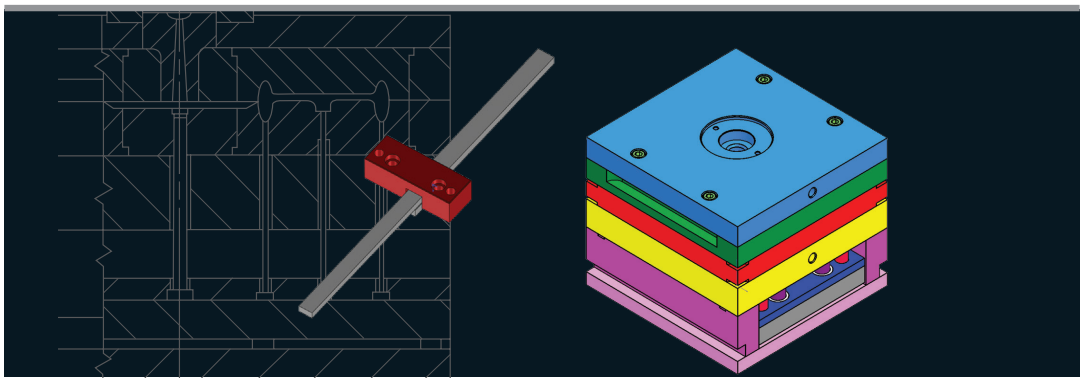

The DME CAD Imbedded Parts Library is accessible throughout www.dme.net. This new imbedded library does not require any login or password. When you locate a product or item within our online website, direct links to CAD data are now incorporated into the page. However, for those who are familiar with our prior PARTcommunity or PARTserver libraries, they are still available for your use. All of these CAD libraries are based on a single library foundation which is managed by DME with the assistance of PARTsolutions.

You can also access the complete CAD library at: https://www.dme.net/cad-data/



DME 2-STAGE EJECTORS

POSITIVE, PRECISION CONTROL
OF TWO-STAGE EJECTION

Table of Contents

Benefits 122
Selection Guidelines 123
Sequencing 124-125
Application Examples 126-128
Assembly & Installation, Top Last 129-130
Component Information, Top Last 131-132
Assembly & Installation, Bottom Last 133-134
Component Information, Bottom Last .135-137
Component Information 138

Two-Stage Ejectors (Metric) 139
Two-Stage Single-Stroke Ejector (Metric) 140
Adapter with Screw 140

2-STAGE EJECTORS

Benefits

Positive, Precise Plate Control

DME 2-Stage Ejectors (TS) adapt to a number of mold base sizes and plate thicknesses. They are available in two ejection sequences: Top Last (TL) and Bottom Last (BL). Each ejection sequence is available in three sizes to accommodate most standard DME mold bases. The stroke range for each ejection stage is determined and fixed by the customer by cutting the Center Rod to the desired length (both TL and BL types) and by also cutting the Travel Sleeve to the desired length (BL type only). Once installed, the DME 2-Stage Ejector ensures positive, precise control of the sequence and distance of each stroke of the two ejector plates. Once installed, there are no adjustments that can be accidentally changed.

Benefits

- Both the first stage and second stage strokes are set independently
- Easy set-up and installation
- Fixed strokes cannot be tampered with or accidentally modified
- Internal installation – avoids interferences with water line connectors and externally mounted components
- Utilizes latching mechanism similar to DME Internal Latch Lock for smooth operation and guidance
- Three sizes to choose from for each style, to accommodate most standard DME mold bases
- Hardened steel components for long life

Top Last Subcomponents

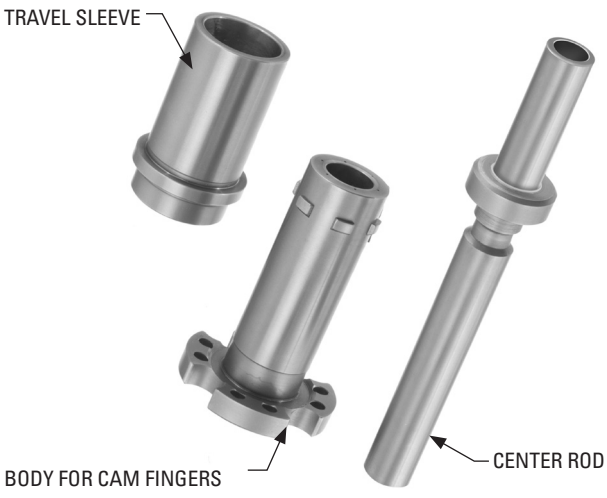

Bottom Last Subcompo-

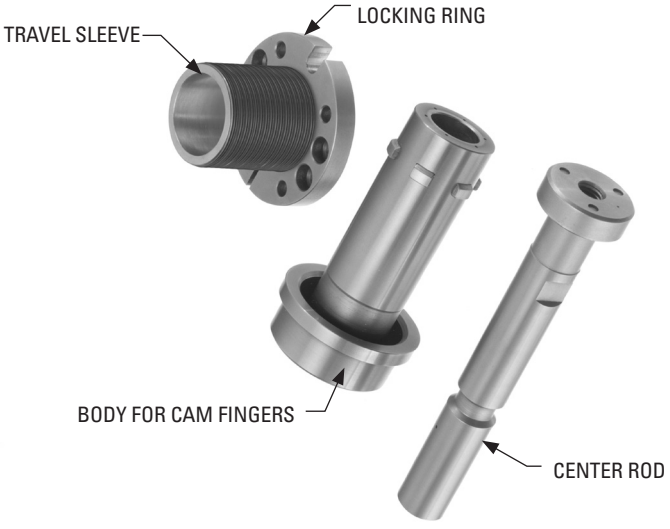

NOTE: Puller Pins are not shown. Puller Pins must be purchased separately.

2-STAGE EJECTORS

Size and Quantity Selection Guidelines

- Select 20mm diameter (small), 26mm diameter (medium), or 32mm diameter (large) 2-Stage Ejector based on the width of the mold base (large molds, thick plates or heavy load applications may require the next size assembly).
- Determine the travel range for each ejection stroke (first and second), being careful not to exceed the maximum stroke specified for the chosen 2-Stage Ejector style and size. This selection is based on the specific application.
- In general, a minimum of two 2-Stage Ejectors are required. For larger molds, thick plates, or an application where loads are near maximum, additional assemblies and/or larger assemblies may be required. An application must never exceed the maximum recommended load values.
- A balanced load must be maintained to avoid cocking and binding which could cause severe overloading. Only one size of 2-Stage Ejectors should be used in each mold base.

2-STAGE EJECTOR ASSEMBLY ITEM NUMBER	BASIC CENTER ROD DIA	STROKE 1		STROKE 2		RECOMMENDED MAXIMUM MOLD BASE WIDTH	MAXIMUM RECOMMENDED LOAD VALUES (PER ASS'Y)		
		MINIMUM	MAXIMUM	MINIMUM	MAXIMUM		STATIC	DYNAMIC	
2-STAGE EJECTOR TOP LAST (TS TL)									
TSTL20A	20mm (Small)	4.0	79.0	4.0	79.0	Up to 200mm, 1 TL20 Up to 450mm, 2 TL20	5.8 kN	0.58 kN	mm
		.16	3.11	.16	3.11	Up to 8", 1 TL20 Up to 18", 2 TL20	1300 lbf	130.0 lbf	in
TSTL26A	26mm (Medium)	6.0	84.0	6.0	84.0	Up to 450mm, 1 TL26 Up to 600mm, 2 TL26	10.8 kN	1.08 kN	mm
		.24	3.31	.24	3.31	Up to 18", 1 TL26 Up to 26", 2 TL26	2428 lbf	242.8 lbf	in
TSTL32A	32mm (Large)	8.0	92.0	8.0	92.0	Up to 600mm, 1 TL32 Up to 900mm, 2 TL32	19.6 kN	1.96 kN	mm
		.31	3.62	.31	3.62	Up to 26", 1 TL32 Up to 35.5", 2 TL32	4406 lbf	440.6 lbf	in
2-STAGE EJECTOR TOP LAST (TS BL)									
TSBL20A*	20mm (Small)	8.0	82.0	12.0	82.0	Up to 200mm, 1 BL20 Up to 450mm, 2 BL20	5.8 kN	0.58 kN	mm
		.32	3.23	.47	3.23	Up to 8", 1 BL20 Up to 18", 2 BL20	1300 lbf	130.0 lbf	in
TSBL26A*	26mm (Medium)	10.0	92.0	18.0	92.0	Up to 450mm, 1 BL26 Up to 600mm, 2 BL26	10.8 kN	1.08 kN	mm
		.40	3.62	.71	3.62	Up to 18", 1 BL26 Up to 26", 2 BL26	2428 lbf	242.8 lbf	in
TSBL32A*	32mm (Large)	12.0	102.0	24.0	102.0	Up to 600mm, 1 BL32 Up to 900mm, 2 BL32	19.6 kN	1.96 kN	mm
		.47	4.02	.95	4.02	Up to 26", 1 BL32 Up to 35.5", 2 BL32	4406 lbf	440.6 lbf	in

*Puller Pins are **not** included with BL Assemblies and must be ordered separately.

2-STAGE EJECTORS

Top Last Sequencing

Patent No. 6.575.730
Patent No. 6.106.271
(Additional patents pending)

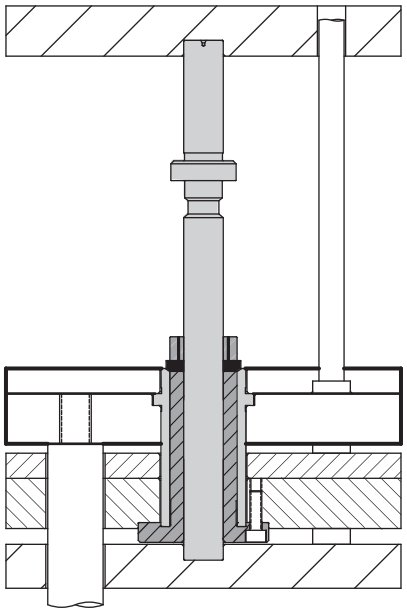



1. Ejector Plates Back

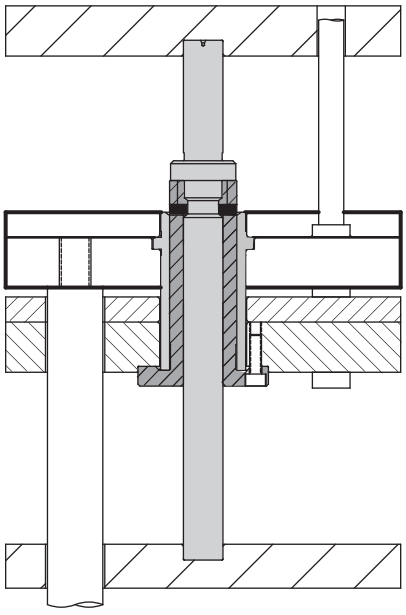

2. First Ejector Stroke

After a predetermined amount of travel, the latch mechanism latches onto the Center Rod, thereby fixing the position of the bottom (moving platen side) ejector plate assembly.

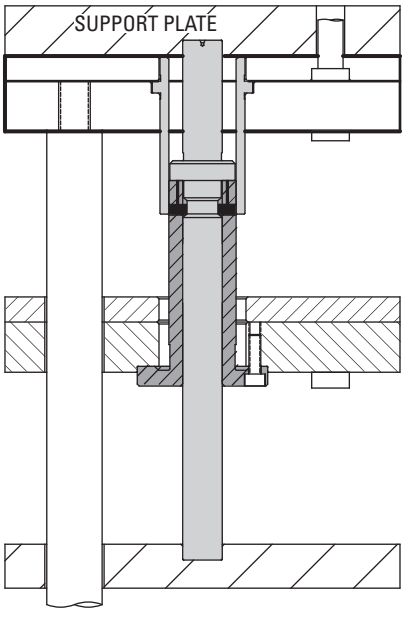

3. Second Ejector Stroke

The top (stationary platen side) ejector plate assembly continues to move through the "second" (or remaining) stroke until the top ejector plate assembly contacts the bottom of the support plate.

2-STAGE EJECTORS

Bottom Last Sequencing

Patent No. 6.575.730

Patent No. 6.106.271

(Additional patents pending)

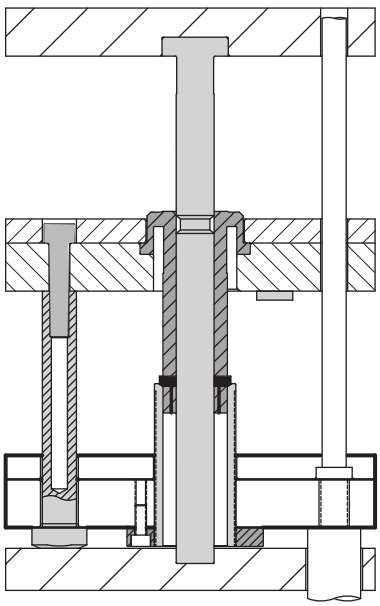



1. Ejector Plates Back

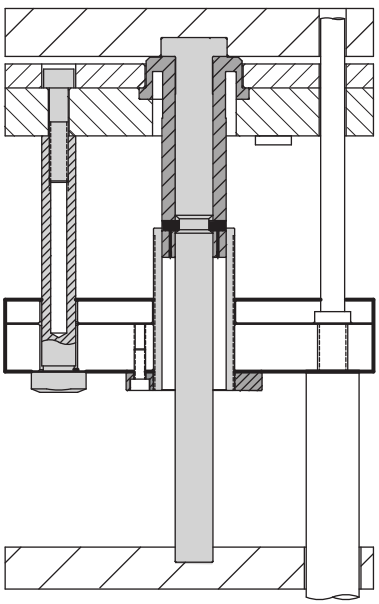

2. First Ejector Stroke

After a predetermined amount of travel, the latch mechanism latches onto the Center Rod, thereby fixing the position of the top (stationary platen side) ejector plate assembly.

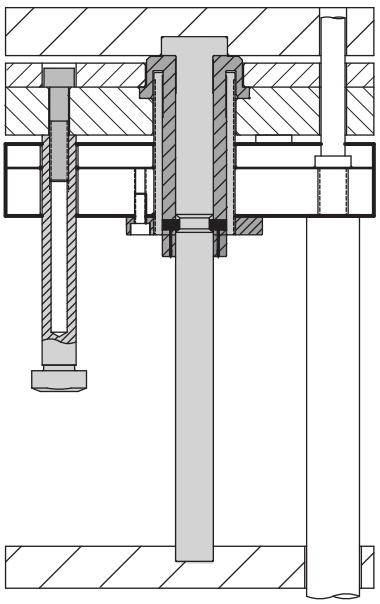

3. Second Ejector Stroke

The bottom (moving platen side) ejector plate assembly continues to move through the "second" (or remaining) stroke until the bottom ejector plate assembly contacts the top ejector plate assembly.

2-STAGE EJECTORS

Application Examples

2-Stage Ejector Bottom Last – TSBL
Application Example 1

1. First ejector stroke lifts cavity plate and ejector sleeve. Center pin remains back. Part is free to be ejected.
2. Second stroke moves the ejector sleeve, releasing the part from cavity. **This configuration is recommended for parts with outside details with smooth or round edges.**

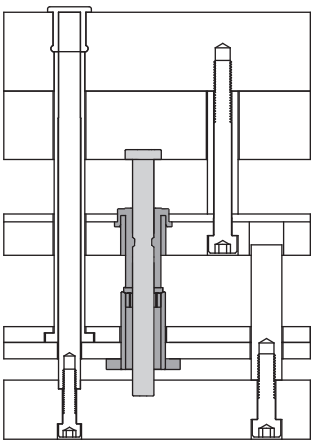

1. Ejector Plates Back

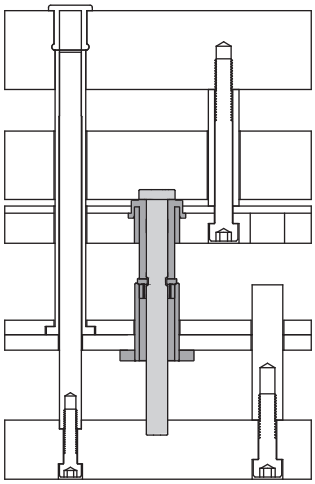

2. First Ejector Stroke

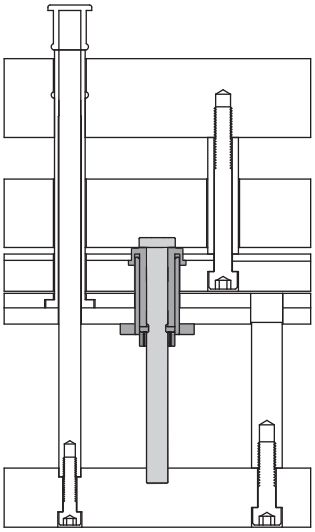

3. Second Ejector Stroke

2-Stage Ejector Bottom Last – TSBL
Application Example 2

1. First ejector stroke pulls the central core pin and sleeve forward. Part is released from cavity.
2. Second stroke pulls the center pin and part forward. Because of plastic elasticity the part is stripped from core. **Recommended for parts with an inner undercut – a circular detail placed on the edge (for example, inward undercut).**

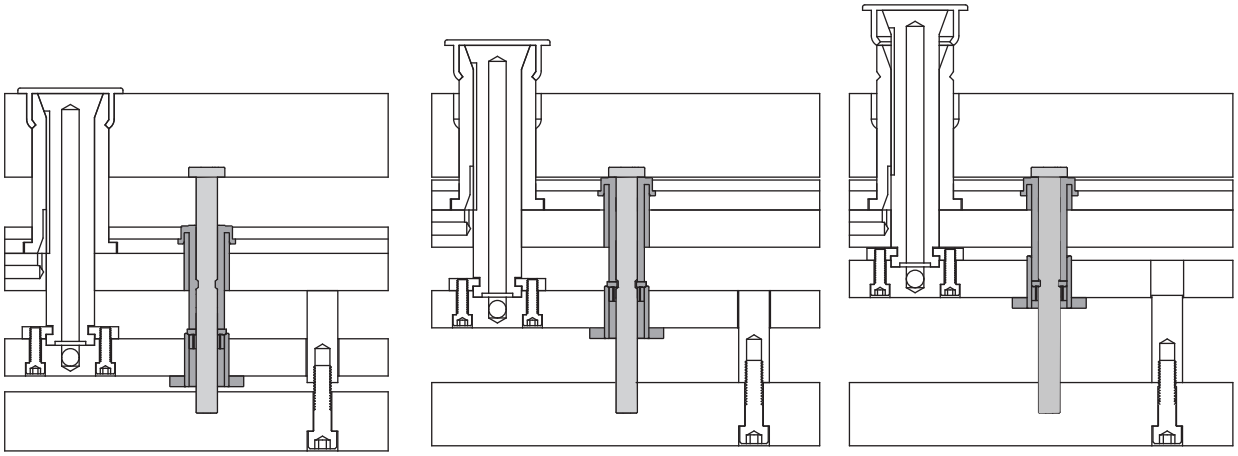

2-STAGE EJECTORS

Application Examples

2-Stage Ejector Bottom Last – TSBL
Application Example 3

1. First ejector stroke moves forward the cavity plate with inner plate. This movement is forcing the edge to move inward. At the end of the stroke the edge clears the inner undercut.
2. Second stroke actuates the ejector pin. This releases the part from the core. **This configuration is recommended for parts with non-circular deep undercut details.**

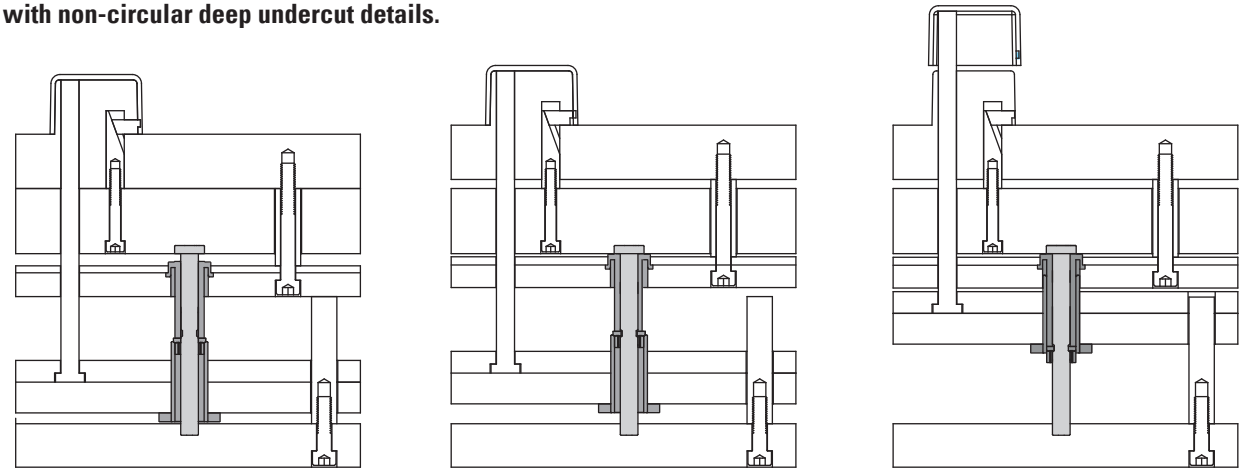

2-Stage Ejector Bottom Last – TSBL
Application Example 4

1. First ejector stroke lifts the collapsible core off the center pin. Collapse segments retract. After a certain traveling distance, when puller pin is clearing the inner side of segments, the positive collapse sleeve is actuated for positive collapse.
2. Second stroke moves the stripper plate past the end of the core so the part can be ejected from the mold.
   This configuration is recommended for complex undercuts, collapsible core applications.

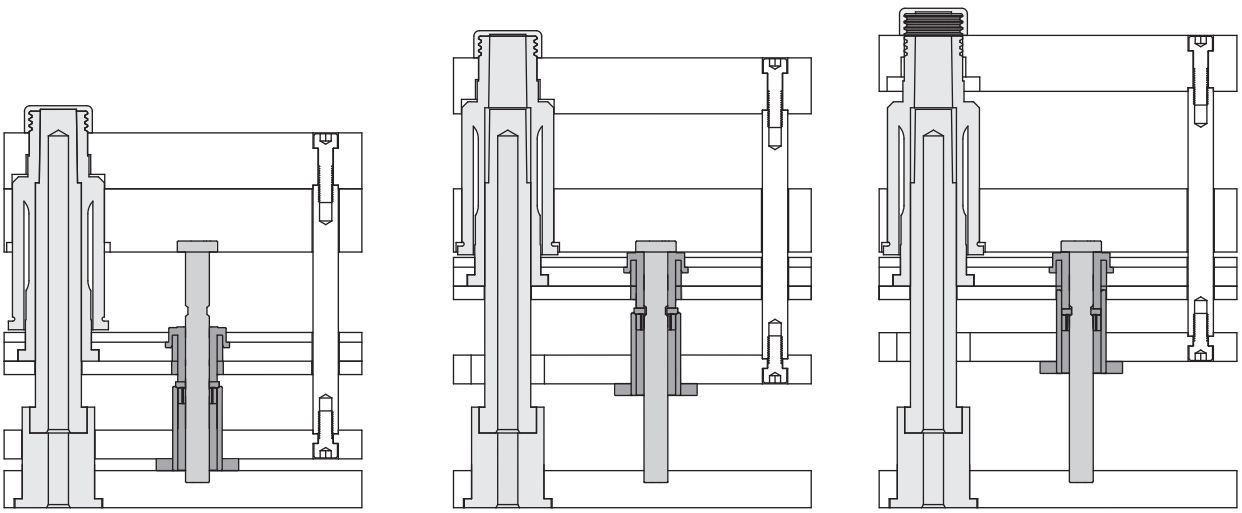

2-STAGE EJECTORS
Application Examples

2-Stage Ejector Bottom Last – TSBL
Application Example 5

1. First ejector stroke moves the angle slide up. As a result the horizontal slide with the exterior detail pulls away from the part.
2. Second stroke actuates the ejector pin. Part is lifted behind the inner cavity. **This configuration is recommended for outside deep details and thru holes.**

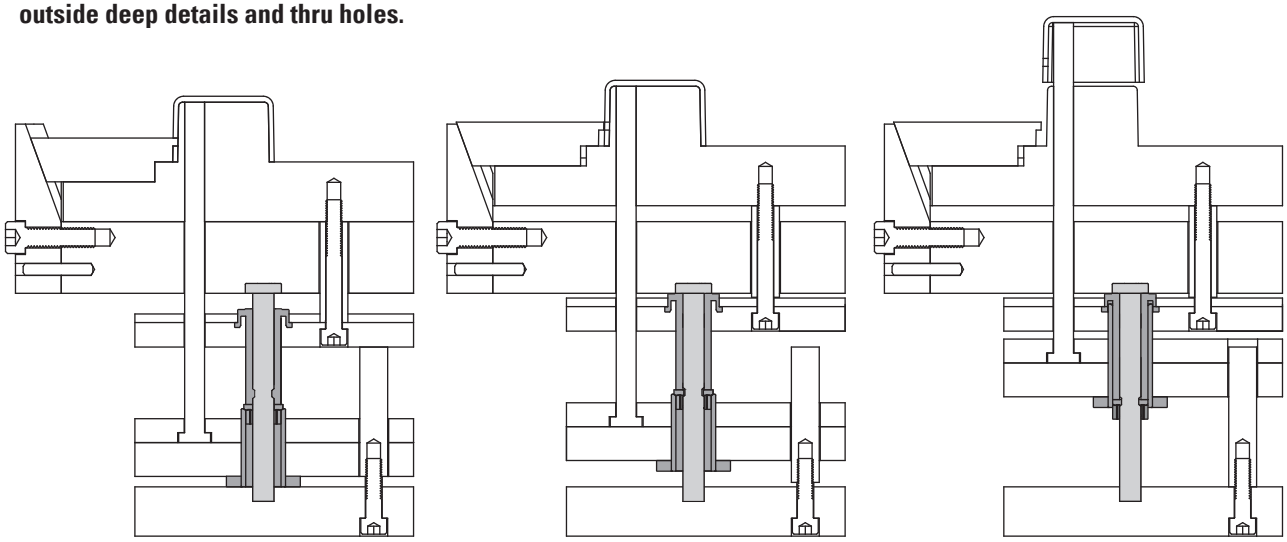

1. Ejector Plates Back | 2. First Ejector Stroke | 3. Second Ejector Stroke

2-Stage Ejector Top Last – TSTL
Application Example

1. First ejector stroke lifts part, central pin and ejector bushing out of "B" plate.
2. Second stroke actuates the ejector bushing and the part is pushed out of the central pin core. **This configuration is recommended for inner undercuts with round, smooth edges.**

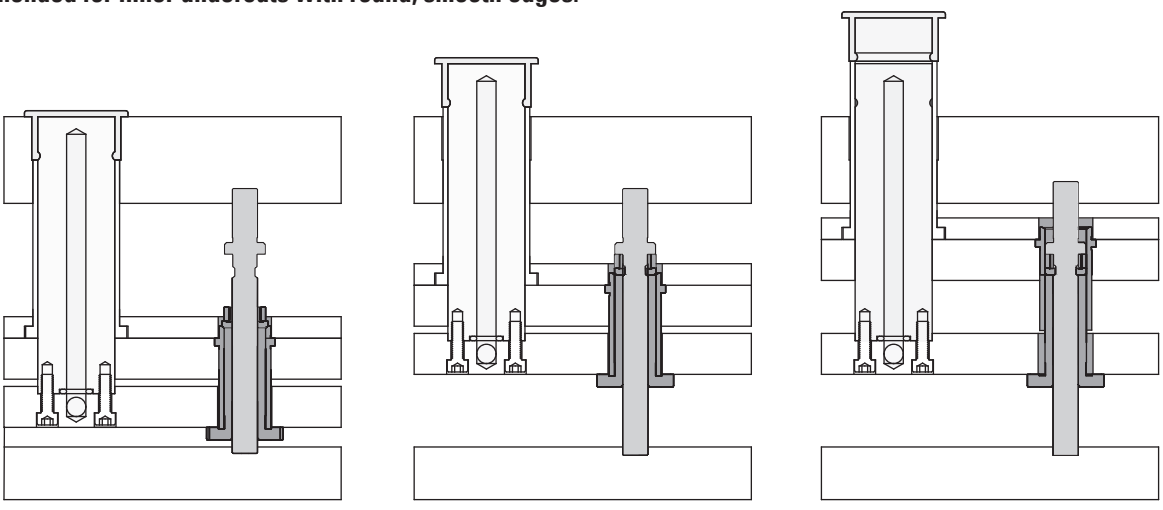

1. Ejector Plates Back | 2. First Ejector Stroke | 3. Second Ejector Stroke

2-STAGE EJECTORS

Assembly and Installation Information – Top Last

STATIONARY PLATEN SIDE

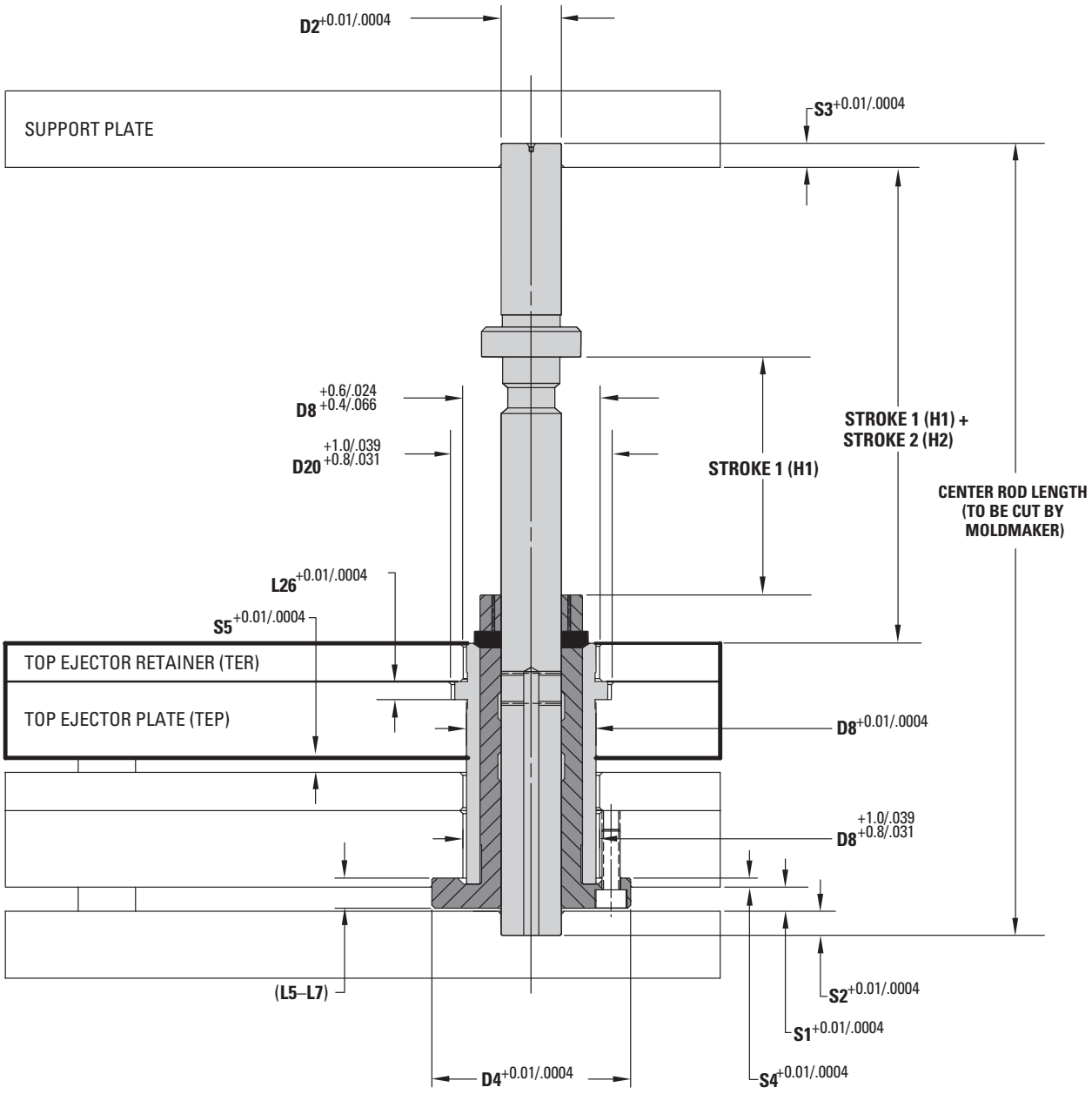

MOVING PLATEN SIDE

- Tolerances depicted here are installation tolerances
- See component detail drawings for specific component tolerances
- Refer to applicable tables for nominal dimension

2-STAGE EJECTORS

Assembly and Installation Information – Top Last

Top Last – TSTL

ITEM NUMBER	CENTER ROD DIA	CENTER ROD LENGTH	H1 – STROKE 1(2)		H2 – STROKE 2(3)		
			MINIMUM	MAXIMUM	MINIMUM	MAXIMUM	
2-STAGE EJECTOR TOP LAST (TS TL)							
TSTL20A	20mm (Small)	262.96	4.0	79.0	4.0	79.0	mm
		10.353	.16	3.11	.16	3.11	in
TSTL26A	26mm (Medium)	285.32	6.0	84.0	6.0	84.0	mm
		11.233	.24	3.31	.24	3.31	in
TSTL32A	32mm (Large)	316.68	8.0	92.0	8.0	92.0	mm
		12.468	.31	3.62	.31	3.62	in

ITEM NUMBER	CENTER ROD DIA	BEP	BER	TEP	TER	S1	S2	S3	S4	S5	
2-STAGE EJECTOR TOP LAST (TS TL)											
TSTL20A	20mm (Small)	25.40	12.70	25.40	12.70	8.00	8.00	8.00	3.00	4.76	mm
		1.000	.500	1.000	.500	.315	.315	.315	.118	.188	in
TSTL26A	26mm (Medium)	28.58	12.70	28.58	12.70	10.00	10.00	10.00	4.00	4.76	mm
		1.125	.500	1.125	.500	.394	.394	.394	.157	.188	in
TSTL32A	32mm (Large)	28.58	15.88	28.58	15.88	15.00	12.00	12.00	4.00	4.76	mm
		1.125	.625	1.125	.625	.591	.472	.472	.157	.188	in

Assembly and Installation Guidelines

- At end of first stroke, Body for Cam Fingers must seat firmly against Center Rod flange.
- The Body must not apply full static pressure against Cam Fingers at end of first stroke.
- The moldmaker must cut and/or grind the Center Rod to the required length prior to installation of the 2-Stage Ejector assembly into the mold base. Do not cut off more than the minimum stroke (H2). The recommended tolerance on the Center Rod length after the customer has cut the Center Rod is +0/-0.02mm or less.
- Stroke 1 (H1) is reduced by cutting and/or grinding the moving platen end of the Center Rod.
- Stroke 2 (H2) is reduced by cutting and/or grinding the stationary platen end of the Center Rod. Minimum H2 specified in table does not include additional stop pins to stationary-side spacer plate. To reduce H2 even further than what is specified in table, add stop pins.
- All 2-Stage Ejectors in a mold must be cut to the same strokes.
- It is recommended that guided ejection be used.
- Ejector speed must be controlled, ensuring that excessive shock loading does not occur.
- 2-Stage Ejectors are not suitable for severe load conditions.
- 2-Stage Ejectors must not be exposed to temperatures that exceed 150˚C (300˚F) at any time.
- Lubricate all metal-to-metal contact areas initially and periodically as required. A good grade of moldmakers non-melting type grease for the appropriate temperature should be used.

2-STAGE EJECTORS

Component Information – Top Last

Center Rod – CR

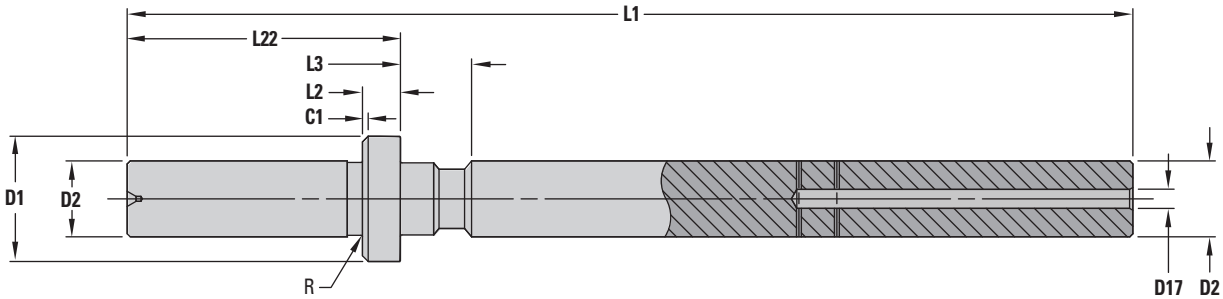

ASSEMBLY ITEM NUMBER	CENTER ROD DIA	COMPONENT ITEM NUMBER	D1 DIA	D2 DIA	D17 DIA	L1* LENGTH	L2 THICK	L3 LENGTH	L22** LENGTH	C1 CHAMFER	R RADIUS	
TSTL20	20mm (Small)	TSTL20CR	33.0	20.0 $^{-0.01}$	5.0	265	10.0	18.74	72.0	1.5	.4	mm
			1.30	0.787 $^{-.0004}$	.20	10.43	.39	.738	2.83	.06	.02	in
TSTL26	26mm (Medium)	TSTL26CR	42.0	26.0 $^{-0.01}$	6.0	290	12.0	22.93	76.0	2.0	.8	mm
			1.65	1.024 $^{-.0004}$	2.4	11.42	.47	.903	2.99	.08	.03	in
TSTL32	32mm (Large)	TSTL32CR	53.0	32.0 $^{-0.01}$	6.0	320	15.0	28.25	82.0	2.5	.8	mm
			2.09	1.260 $^{-.0004}$	.24	12.60	.59	1.112	3.23	.10	.03	in

*Cutoff on both ends of Center Rod only per installation data.
**Final length must have tolerance of –0.02mm (–0.001in) after moldmaker has cut the Center Rod to the desired length.

Travel Sleeve – TS

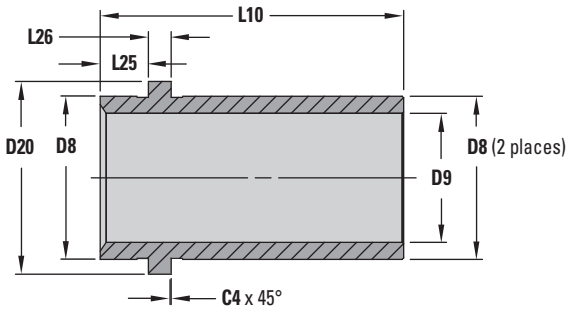

ASSEMBLY ITEM NUMBER	CENTER ROD DIA	COMPONENT ITEM NUMBER	D8 DIA	D9 DIA	D20 DIA	L10 LENGTH	L25 LENGTH	L26 THICK	C4 CHAMFER	
TSTL20	20mm (Small)	TSTL20TS	43.0 $^{-0.03}$	34.0	50.8	79.96	12.70	6.00 $^{-0.01}$	.5	mm
			1.693 $^{-0.001}$	1.34	2.00	3.148	.500	.236 $^{-.0004}$	.02	in
TSTL26	26mm (Medium)	TSTL26TS	54.0 $^{-0.03}$	43.0	63.0	85.32	12.70	8.00 $^{-0.01}$	.5	mm
			2.126 $^{-0.001}$	1.69	2.48	3.359	.500	.315 $^{-.0004}$	.02	in
TSTL32	32mm (Large)	TSTL32TS	68.0 $^{-0.03}$	54.0	78.0	93.68	15.88	10.00 $^{-0.01}$	.5	mm
			2.677 $^{-0.001}$	2.13	3.07	3.688	.625	.394 $^{-.0004}$	.02	in

NOTE: All dimensions shown for components are intended for drawing layout purposes only and in some cases have been rounded off. Also, where the same diameter dimension is shown for parts that fit together, the tolerances create the appropriate clearance or fit.

2-STAGE EJECTORS

Component Information – Top Last

Body for Cam Fingers – BD
(Body only without Cam Fingers)

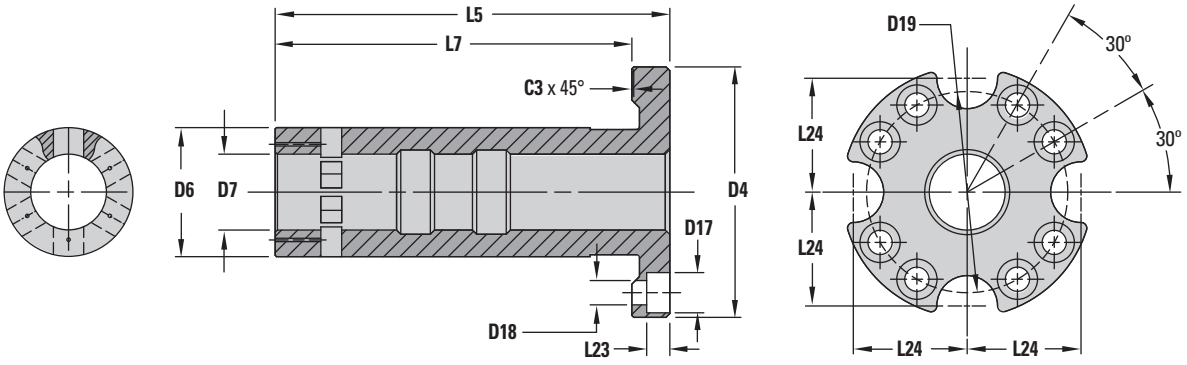

ASSEMBLY ITEM NUMBER	CENTER ROD DIA	COMPONENT ITEM NUMBER	D4 DIA	D6 DIA	D7 DIA	D17 DIA	D18 DIA	D19 DIA	
TSTL20	20mm (Small)	TSTL20BD	66.00 $^{-0.03}$	34.0	20.0	10.6	6.4	53.0	mm
			2.598 $^{-0.001}$	1.34	.79	.42	.25	2.09	in
TSTL26	26mm (Medium)	TSTL26BD	84.00 $^{-0.03}$	43.0	26.0	13.8	8.7	67.0	mm
			3.307 $^{-0.001}$	1.69	1.02	.54	.34	2.64	in
TSTL32	32mm (Large)	TSTL32BD	105.00 $^{-0.03}$	54.0	32.0	16.8	10.8	85.0	mm
			4.134 $^{-0.001}$	2.13	1.26	.66	.43	3.35	in

ASSEMBLY ITEM NUMBER	CENTER ROD DIA	COMPONENT ITEM NUMBER	L5 LENGTH	L7 LENGTH	L23 LENGTH	L24 LENGTH	C3 CHAMFER	
TSTL20	20mm (Small)	TSTL20BD	104.0	94.0	6.1	30.0	.5	mm
			4.09	3.70	.24	1.18	.02	in
TSTL26	26mm (Medium)	TSTL26BD	116.0	103.0	8.2	37.0	.5	mm
			4.57	4.06	.32	1.46	.02	in
TSTL32	32mm (Large)	TSTL32BD	131.0	113.4	10.2	47.0	.6	mm
			5.16	4.46	.40	1.85	.02	in

Cam Finger Replacement Kit – KT

With (6) Cam Fingers, and (8) Locking Pins

Cam Fingers

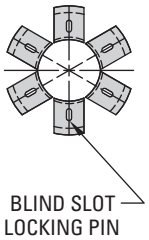

Locking Pin – LP



ASSEMBLY ITEM NUMBER	CENTER ROD DIA	KIT ITEM NUMBER
TSTL20	20mm (Small)	TSTL20KT
TSTL26	26mm (Medium)	TSTL26KT
TSTL32	32mm (Large)	TSTL32KT

NOTE: All dimensions shown for components are intended for drawing layout purposes only and in some cases have been rounded off. Also, where the same diameter dimension is shown for parts that fit together, the tolerances create the appropriate clearance or fit.

2-STAGE EJECTORS

Assembly and Installation Information – Bottom Last

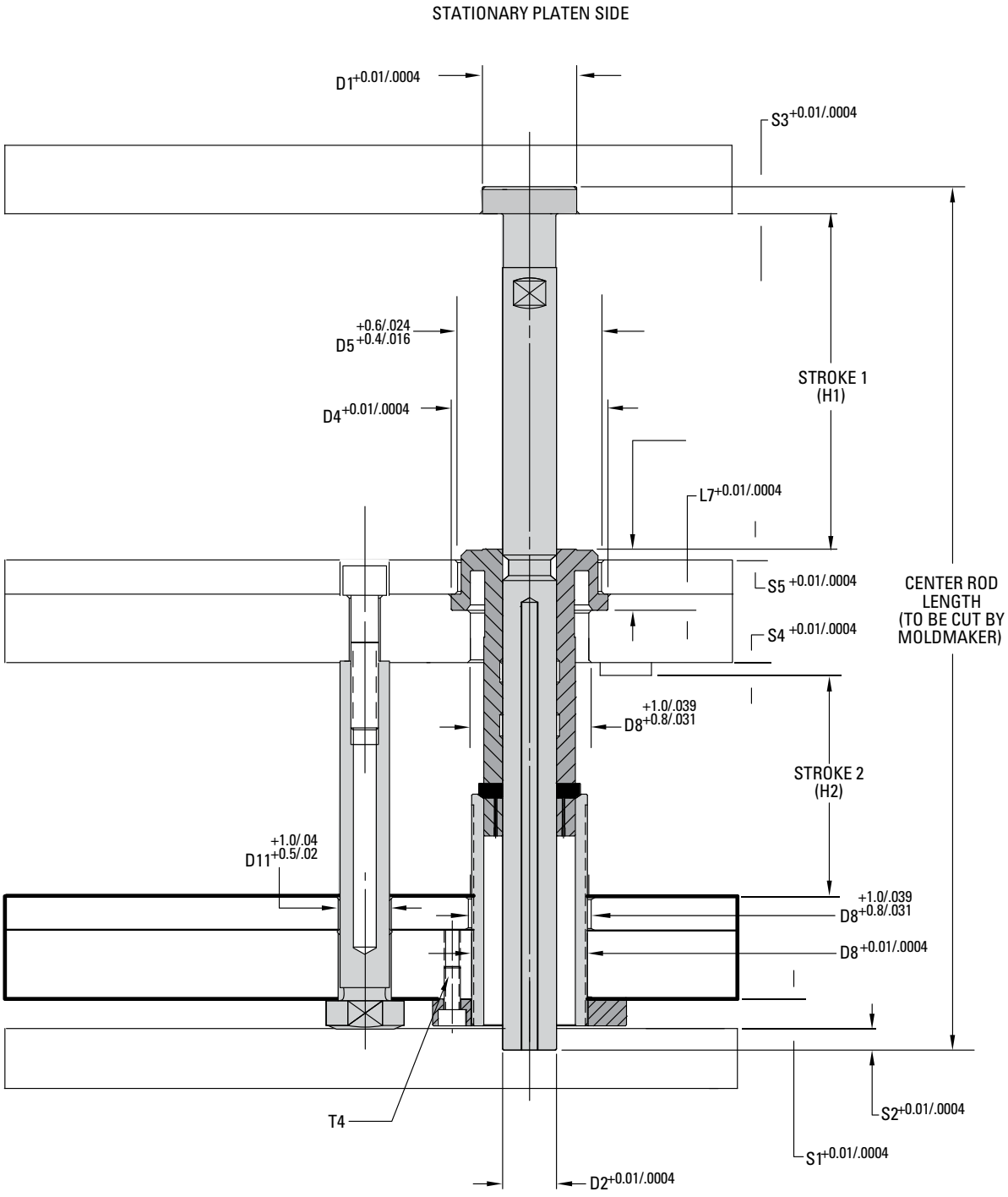

- Tolerances depicted here are installation tolerances
- See component detail drawings for specific component tolerances
- Refer to applicable tables for nominal dimension

2-STAGE EJECTORS

Assembly and Installation Information – Bottom Last

Bottom Last – TSBL

ITEM NUMBER	CENTER ROD DIA	CENTER ROD LENGTH	TRAVEL SLEEVE LENGTH	H1 – STROKE 1(3)		H2 – STROKE 2(4)		
				MINIMUM	MAXIMUM	MINIMUM	MAXIMUM	
2-STAGE EJECTOR BOTTOM LAST (TS BL)								
TSBL20A	20mm (Small)	277.96	86.00	8.0	82.0	12.0	82.0	mm
		10.943	3.386	.32	3.23	.47	3.23	in
TSBL26A	26mm (Medium)	311.32	94.00	10.0	92.0	18.0	92.0	mm
		12.257	3.701	.39	3.62	.71	3.62	in
TSBL32A	32mm (Large)	352.21	105.00	12.0	102.0	24.0	102.0	mm
		13.867	4.134	.47	4.02	.94	4.02	in

ITEM NUMBER	CENTER ROD DIA	BEP	BER	TEP	TER	T4	S1	S2	S3	S4	S5	
2-STAGE EJECTOR BOTTOM LAST (TS BL)												
TSBL20A	20mm (Small)	25.40	12.70	25.40	12.70	M6	11.00	8.00	10.00	4.76	4.00	mm
		1.000	.500	1.000	.500	M6	.433	.315	.394	.187	.157	in
TSBL26A	26mm (Medium)	28.58	12.70	28.58	12.70	M8	14.00	10.00	12.00	4.76	4.00	mm
		1.125	.500	1.125	.500	M8	.551	.394	.472	.187	.157	in
TSBL32A	32mm (Large)	28.58	15.88	28.58	15.88	M10	17.00	12.00	14.00	6.29	6.00	mm
		1.125	.625	1.125	.625	M10	.669	.472	.551	.248	.238	in

Assembly and Installation Guidelines

- At end of second stroke, Body for Cam Fingers must seat firmly against Center Rod head or spacer plate.
- The moldmaker must cut and/or grind the Center Rod to the required length prior to installation of the 2-Stage Ejector assembly into the mold base. The recommended tolerance on the Center Rod length after the customer has cut the Center Rod is +0/-0.02mm or less.
- The moldmaker must cut and/or grind the Travel Sleeve to the required length prior to installation of the 2-Stage Ejector assembly into the mold base.
- Stroke 1 (H1) is reduced by cutting and/or grinding the moving platen end of the Center Rod.
- Stroke 2 (H2) is reduced by cutting and/or grinding the moving platen end of both the Center Rod and the Travel Sleeve.
- All 2-Stage Ejectors in a mold must be cut to the same strokes.
- It is recommended that guided ejection be used.
- Ejector speed must be controlled, ensuring that excessive shock loading does not occur.
- 2-Stage Ejectors are not suitable for severe load conditions.
- 2-Stage Ejectors must not be exposed to temperatures that exceed 150˚C (300˚F) at any time.
- Lubricate all metal-to-metal contact areas initially and periodically as required. A good grade of moldmakers non-melting type grease for the appropriate temperature should be used.
- A minimum of (4) Puller Pins should be used with each mold. Larger molds may require additional Puller Pins.
- The moldmaker must cut and/or grind the Puller Pins to the required length.
- Puller Pins are **not** included with Bottom Last Assemblies and must be ordered separately.

2-STAGE EJECTORS

Component Information – Bottom Last

Center Rod – CR

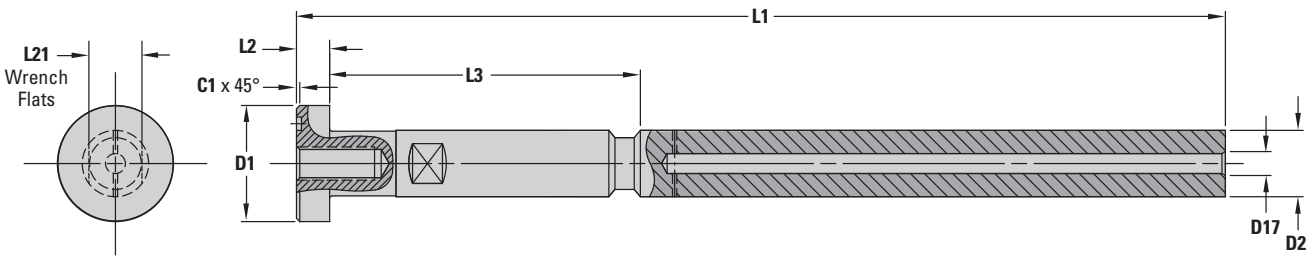

ASSEMBLY ITEM NUMBER	CENTER ROD DIA	COMPONENT ITEM NUMBER	D1 DIA	D2 DIA	D17 DIA	L1* LENGTH	L2 THICK	L3 LENGTH	L21 FLATS	C1 CHAMFER	
TSBL20	20mm (Small)	TSBL20CR	34.0 $^{-0.01}$	20.0 $^{-0.01}$	6.0	280.0	10.0 $^{+0.02}$	93.66	16.0	1.0	mm
			1.339 $^{-.0004}$	.787 $^{-.0004}$	.24	11.02	.394 $^{+.001}$	3.687	.63	.04	in
TSBL26	26mm (Medium)	TSBL26CR	44.0 $^{-0.01}$	26.0 $^{-0.01}$	6.0	314.0	12.0 $^{+0.02}$	105.67	20.0	1.0	mm
			1.732 $^{-.0004}$	1.024 $^{-.0004}$	.24	12.36	.472 $^{+.001}$	4.160	.79	.04	in
TSBL32	32mm (Large)	TSBL32CR	58.0 $^{-0.01}$	32.0 $^{-0.01}$	8.0	354.0	14.0 $^{+0.02}$	118.80	27.0	1.5	mm
			2.283 $^{-.0004}$	1.260 $^{-.0004}$	.31	13.94	.551 $^{+.001}$	4.677	1.06	.06	in

*Cutoff on small diameter end only per installation data.

Travel Sleeve – TS

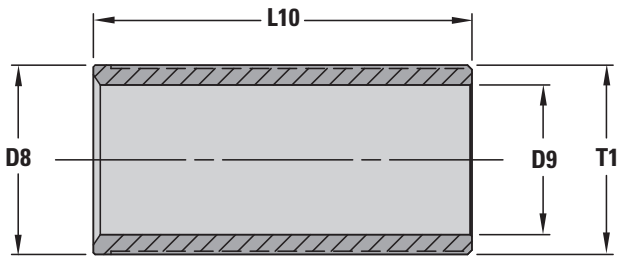

ASSEMBLY ITEM NUMBER	CENTER ROD DIA	COMPONENT ITEM NUMBER	D8 DIA	D9 DIA	L10* LENGTH	T1 THREAD	
TSBL20	20mm (Small)	TSBL20TS	43.00 $^{-0.03}$	34.0	86.0	M43.2 x 1.25	mm
			1.693 $^{-0.001}$	1.34	3.39		in
TSBL26	26mm (Medium)	TSBL26TS	54.00 $^{-0.03}$	43.0	94.0	M54.2 x 1.25	mm
			2.126 $^{-0.001}$	1.69	3.70		in
TSBL32	32mm (Large)	TSBL32TS	68.00 $^{-0.03}$	54.0	105.0	M68.25 x 1.5	mm
			2.677 $^{-0.001}$	2.13	4.13		in

*Supplied to provide maximum travel with no cutoff. To reduce travel in Stroke 2 (H2), cut threaded end per installation data.

NOTE: All dimensions shown for components are intended for drawing layout purposes only and in some cases have been rounded off. Also, where the same diameter dimension is shown for parts that fit together, the tolerances create the appropriate clearance or fit.

2-STAGE EJECTORS

Component Information – Bottom Last

Body for Cam Fingers – BD
(Body only without Cam Fingers)

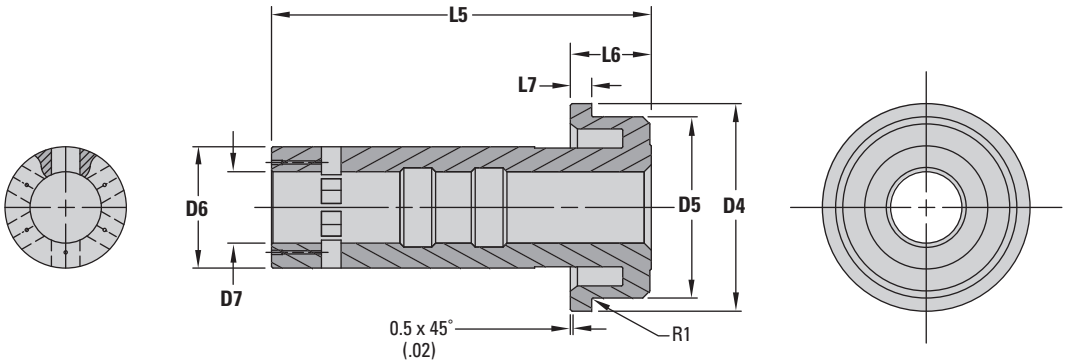

ASSEMBLY ITEM NUMBER	CENTER ROD DIA	COMPONENT ITEM NUMBER	D4 DIA	D5 DIA	D6 DIA	D7 DIA	L5 LENGTH	L6 THICK	L7 THICK	R1 RADIUS	
TSBL20	20mm (Small)	TSBL20BD	58.20 $^{-0.03}$	50.8 $^{-0.2}$	34.00	20.00	106.46	22.70	6.0 $^{-0.01}$	.4	mm
			2.291 $^{-0.001}$	2.00 $^{-.008}$	1.339	.787	4.191	.894	.236 $^{-.0004}$	.02	in
TSBL26	26mm (Medium)	TSBL26BD	70.00 $^{-0.03}$	62.6 $^{-0.2}$	43.00	26.00	121.22	22.70	6.0 $^{-0.01}$	.4	mm
			2.756 $^{-0.001}$	2.46 $^{-.008}$	1.693	1.024	4.772	.894	.236 $^{-.0004}$	.02	in
TSBL32	32mm (Large)	TSBL32BD	87.00 $^{-0.03}$	78.0 $^{-0.2}$	54.00	32.00	139.70	28.88	7.0 $^{-0.01}$	.4	mm
			3.425 $^{-0.001}$	3.07 $^{-.008}$	2.126	1.260	5.500	1.137	.276 $^{-.0004}$	.02	in

Locking Ring – LR

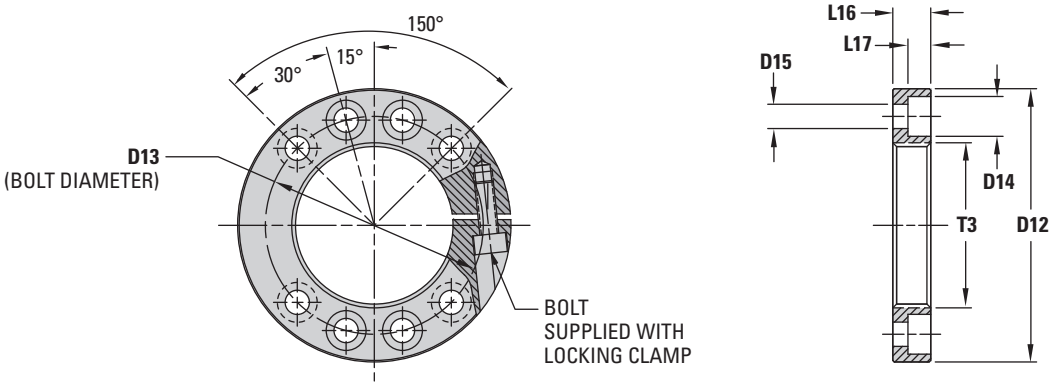

ASSEMBLY ITEM NUMBER	CENTER ROD DIA	COMPONENT ITEM NUMBER	D12 DIA	D13 DIA	D14 DIA	D15 DIA	L16 LENGTH	L17 LENGTH	T3 THREAD	
TSBL20	20mm (Small)	TSBL20LR	72.0	57.4	10.5	6.4	10.0	6.0	M43.2 x 1.25	mm
			2.83	2.26	.41	.25	.39	.24		in
TSBL26	26mm (Medium)	TSBL26LR	90.0	72.0	13.8	8.6	13.0	8.1	M54.2 x 1.25	mm
			3.54	2.83	.54	.34	.51	.32		in
TSBL32	32mm (Large)	TSBL32LR	112.0	90.0	16.8	10.8	16.0	10.1	M68.25 x 1.5	mm
			4.41	3.54	.66	.43	.63	.40		in

NOTE: All dimensions shown for components are intended for drawing layout purposes only and in some cases have been rounded off. Also, where the same diameter dimension is shown for parts that fit together, the tolerances create the appropriate clearance or fit.

2-STAGE EJECTORS

Component Information – Bottom Last

Cam Finger Replacement Kit – KT

With (6) Cam Fingers, and (8) Locking Pins

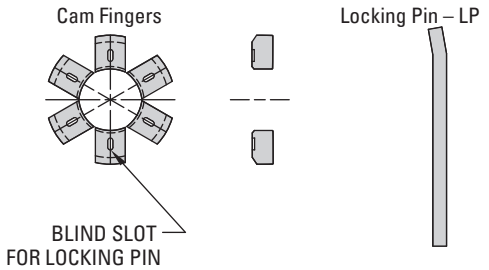

ASSEMBLY ITEM NUMBER	CENTER ROD DIA	KIT ITEM NUMBER
TSBL20	20mm (Small)	TSBL20KT
TSBL26	26mm (Medium)	TSBL26KT
TSBL32	32mm (Large)	TSBL32KT

Puller Pin – PP

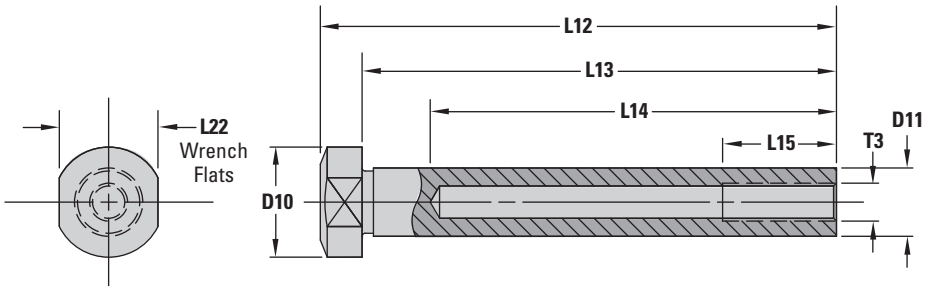

ASSEMBLY ITEM NUMBER	CENTER ROD DIA	COMPONENT ITEM NUMBER	D10 DIA	D11 DIA	L12 LENGTH	L13 LENGTH	L14 LENGTH	L15 LENGTH	L22 FLATS	T3 THREAD	
TSBL20	20mm (Small)	TSBL20PP	29.0	18.0	136.0	125.0	107.0	30.0	26.0	M10	mm
			1.14	.71	5.35	4.92	4.21	1.18	1.02		in
TSBL26	26mm (Medium)	TSBL26PP	34.0	21.0	153.0	139.0	120.0	40.0	30.0	M12	mm
			1.34	.83	6.02	5.47	4.72	1.57	1.18		in
TSBL32	32mm (Large)	TSBL32PP	43.0	26.0	171.0	154.0	138.0	50.0	36.0	M16	mm
			1.69	1.02	6.73	6.06	5.43	1.97	1.42		in

NOTE: A minimum of (4) Puller Pins should be used with each mold. Larger molds may require additional Puller Pins. Puller Pins are **not** included with BL Assemblies and must be ordered separately.

Top Last Replacement Component Item Numbers

ASSEMBLY ITEM NUMBER	CENTER ROD DIA	CENTER ROD	TRAVEL SLEEVE	BODY FOR CAM FINGERS	CAM FINGER REPLACEMENT KIT
TSTL20A	20mm (Small)	TSTL20CR	TSTL20TS	TSTL20BD	TSTL20KT
TSTL26A	26mm (Medium)	TSTL26CR	TSTL26TS	TSTL26BD	TSTL26KT
TSTL32A	32mm (Large)	TSTL32CR	TSTL32TS	TSTL32BD	TSTL32KT

NOTE: All dimensions shown for components are intended for drawing layout purposes only and in some cases have been rounded off. Also, where the same diameter dimension is shown for parts that fit together, the tolerances create the appropriate clearance or fit

Bottom Last Replacement Component Item Numbers

ASSEMBLY ITEM NUMBER	CENTER ROD DIA	CENTER ROD	TRAVEL SLEEVE	BODY FOR CAM FINGERS	LOCKING RING	CAM FINGER REPLACEMENT KIT	PULLER PIN*
TSBL20A	20mm (Small)	TSBL20CR	TSBL20TS	TSBL20BD	TSBL20LR	TSBL20KT	TSBL20PP
TSBL26A	26mm (Medium)	TSBL26CR	TSBL26TS	TSBL26BD	TSBL26LR	TSBL26KT	TSBL26PP
TSBL32A	32mm (Large)	TSBL32CR	TSBL32TS	TSBL32BD	TSBL32LR	TSBL32KT	TSBL32PP

*Puller Pins are **not** included with BL Assemblies and must be ordered separately.

2-STAGE EJECTORS

Component Information

Alternate Configurations System Configuration for Central Ejector Rod Location

The illustrations below show one 2-Stage Ejector assembly that has been centrally located on the ejector plates.

TL Assembly

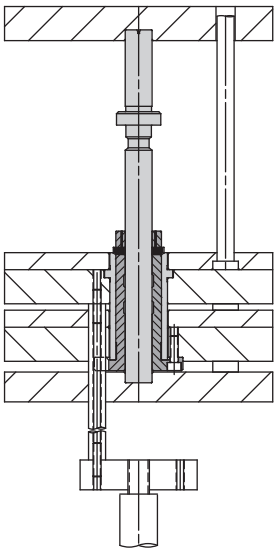

BL Assembly

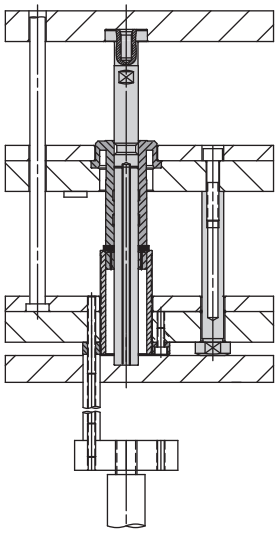

TL and BL 2-Stage Ejectors – Cam Finger Removal

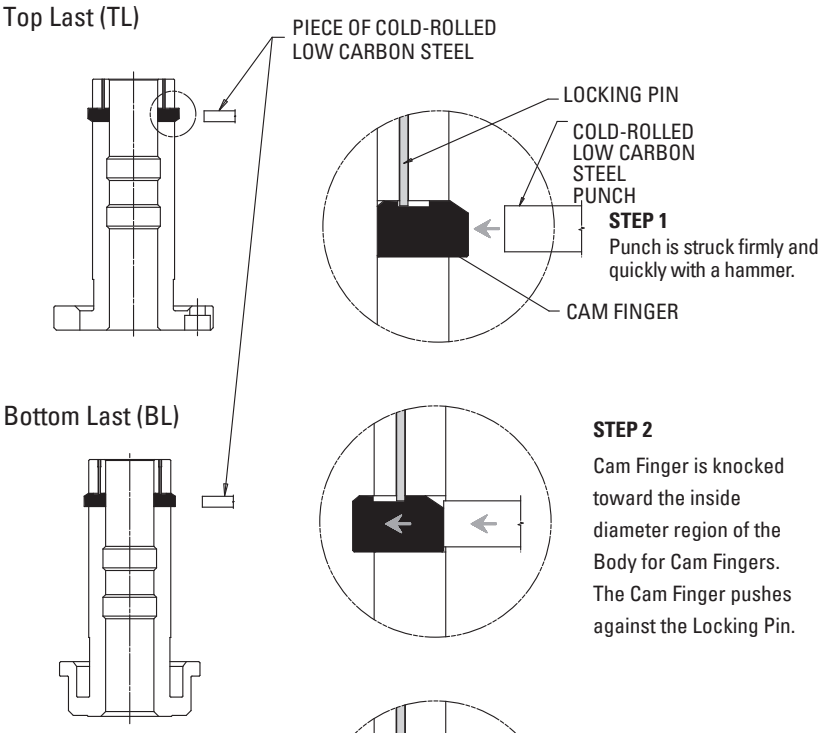

STEP 1
Punch is struck firmly and quickly with a hammer.

STEP 2
Cam Finger is knocked toward the inside diameter region of the Body for Cam Fingers. The Cam Finger pushes against the Locking Pin.

STEP 3
A portion of Locking Pin breaks cleanly away and travels with the moving Cam Finger toward the inside diameter of the Body for Cam Fingers.

STEP 4
Both the Cam Finger and broken piece of Locking Pin drop into the inside diameter of the Body for Cam Fingers.

NOTES:

- Cold rolled, low carbon steel must be used as a removal punch to avoid damaging the Cam Fingers and/or Body.
- The contact surface of the punch (where it rests against the Cam Finger) should be profiled with a curved surface that matches the exposed surface of the Cam Finger.
- Ensure that Body for Cam Fingers is firmly retained before attempting Cam Finger removal.

TWO-STAGE EJECTORS

Two-Stage Ejectors – Installation

Two-Stage Ejector – FW 1800

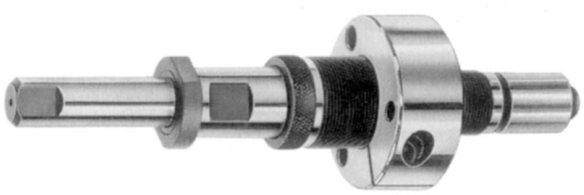

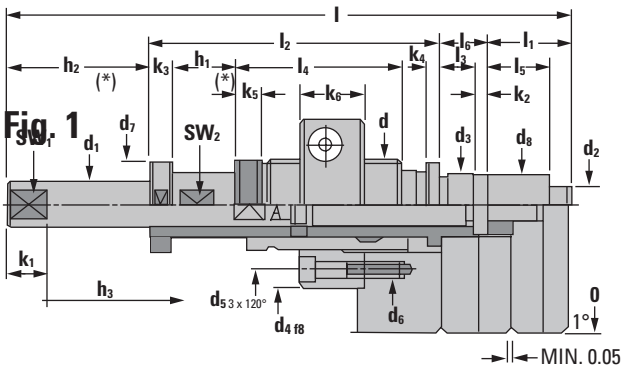

Fig. 1

REF d	d_1	d_2	d_3	d_4	d_5	d_6	d_7	d_8	d_9	$*l_0$	l	l_1	l_2	l_3	l_4	l_5	l_6	STROKE(*) h_1	h_2	h_3	k_1	k_2	k_3	k_4	k_5	k_6	SW_1	SW_2	A mm²
FW1800M32X1.5	16	M12X1	M22X1	60	46	M5	32	20.6	M10	160	200	30	101	11	56	20	16	5-30	50	80	16	5	9.0	5	8	24	13	20	56
FW1800M42X1.5	22	M16X1.5	M30X1.5	80	62	M6	42	28.0	M14	200	266	40	132	16	75	30	22	10-40	70	110	20	6	9.0	6	10	30	17	27	100
FW1800M52X1.5	28	M20X1.5	M38X1.5	90	72	M8	53	36.0	M16	350	285	45	134	16	75	35	22	10-40	80	120	22	6	10.5	8	12	30	22	35	152
FW1800M62X1.5	37	M24X1.5	M48X1.5	120	80	M8	63	44.0	M20	500	300	50	140	16	80	40	22	10-40	80	120	22	6	10.5	8	12	30	30	44	215

*l_0: Length of ejector plate

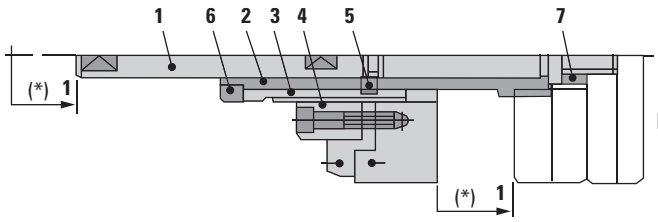

Fig. 2

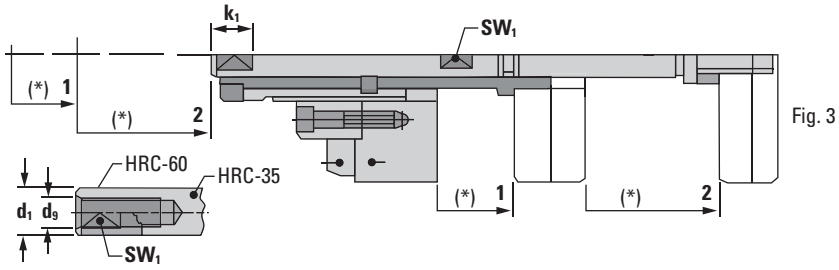

Fig. 3

1. Ejector rod
2. Ejector sleeve
3. Adjusting bush
4. Assembly flange
5. Segments
6. Stop ring
7. Spacer

Fitting:

1. Mount ejector rod #1 together with ejector plate. For safety please use LOCTITE C 242.
2. Move over parts #2, 3 and 4 together and tighten up part #3 (SW2 see chart).
3. Tighten up adjusting bush #3 with assembly flange #4.
4. Fix assembly flange.

Recommended lubricants: C 135, C 160, C 170, etc.

Installation Instructions:

This device is preferably screwed together with the hydraulic machine ejector. The required internal or external thread of part #1 has to be made adequately. The ejector rod #1 may not be shortened by more than length k1, if the total stroke h3, including a possible deeper run in of part #1 into part #2, is not maintained. By rotating adjustment of bush #3 the first stroke h1 is continuously adjusted. With stroke h1 both ejector pin plates are moved simultaneously. On the following stroke h2 only the second ejector pin plate movement is continued. Choose the thickness of the spacer ring #7 so that there is at least 0.05mm clearance between the ejector pin plates (see **Fig. 1**).

TWO-STAGE EJECTORS

Two-Stage Single-Stroke Ejector | Adapter with Screw

Two-Stage Single-Stroke Ejector – FW 1850

The two-stage single-stroke ejector can be integrated into ejection molding tools. This ejector automatically divides the motion into two sequential strokes.

The functional sequence associated with this makes it possible to create new mold ejection mechanisms.

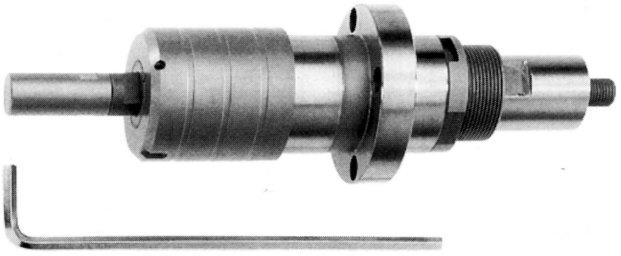

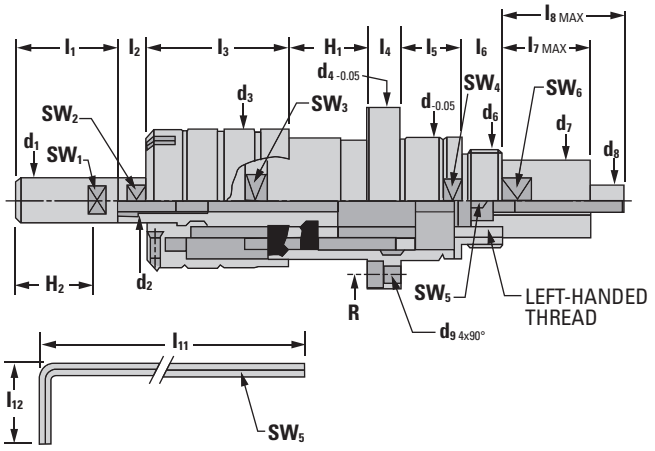

REF d X H_1 MAX	H_1 MIN	H_2	d_1	d_2	d_3	d_4	d_6	d_7	d_8	d_9	R	l_1	l_2
FW185050X32	5	12-32	18	M12	56	75	M40X1.5	31.5	M12X1.25	M6X16	31	42	12
FW185058X40	5	15-40	22	M16	64	90	M45X1.5	36	M14X1.5	M8X20	36	42	15
FW185058X56	5	25-65	22	M16	64	90	M45X1.5	36	M14X1.5	M8X20	36	58	15
FW185070X71	10	20-71	26	M20	79	100	M55X1.5	44	M16X1.5	M8X25	42	75	18

REF d X H_1 MAX	l_3	l_4	l_5	l_6	l_7 MAX	l_8 MAX	l_{11}	l_{12}	SW_1	SW_2	SW_3	SW_3 Nm	SW_4	SW_5	SW_6
FW185050X32	58	14	25	17	36	50	180	37	14	14	36	120	46	6	27
FW185058X40	68	16	25	17	45	66	200	44	18	18	41	160	55	8	32
FW185058X56	84	16	25	17	45	66	250	44	18	18	41	120	55	8	32
FW185070X71	107	22	30	22	56	80	270	50	22	24	50	200	65	10	38

Adapter with Screw – FW 1851

Material: 1.6582

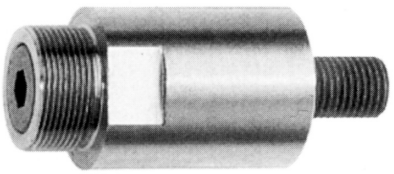

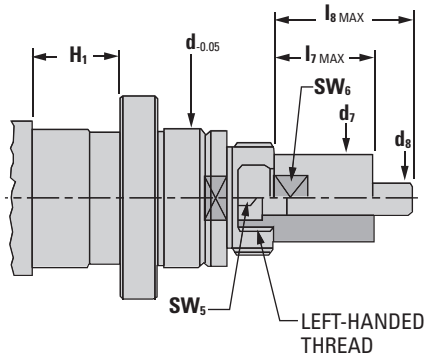

REF d X H_1 MAX	d_7	d_8	l_7 MAX	l_8 MAX	SW_5	SW_6
FW185150x32	31.5	M12X1.25	36	50	6	27
FW185158x40	36	M14X1.5	45	66	8	32
FW185158x56	36	M14X1.5	45	66	8	32
FW185170x71	44	M16X1.5	56	80	10	38



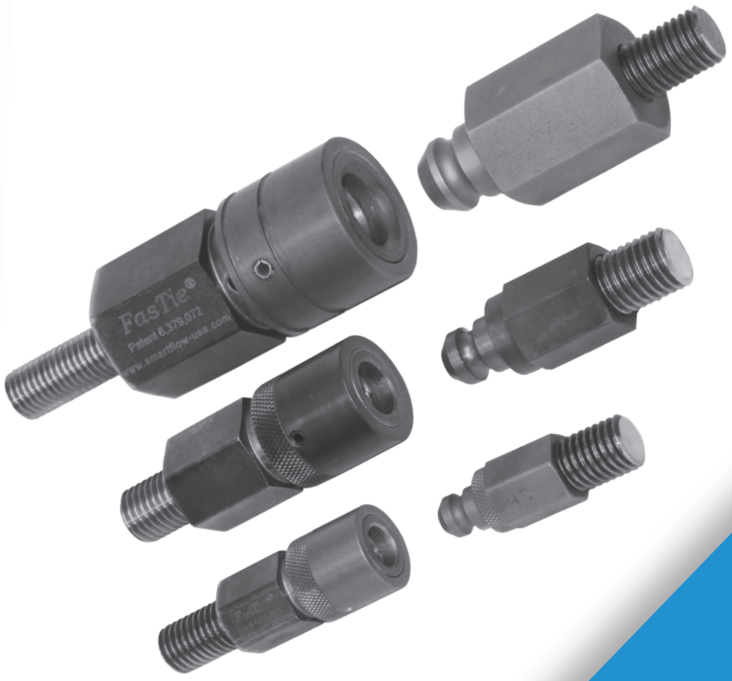

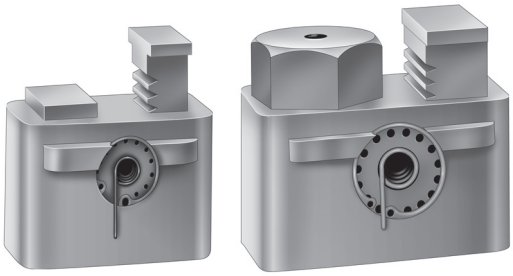

MOLD PLATE OPERATION

PRECISION CONTROL OF
MOLD PLATE OPERATION FEATURING:
INTERNAL LATCH-LOCK ACCELERATED
EJECTORS LATCH LOCKS AND PULLERS
COUNTERVIEW MOLD COUNTERS

MOLD PLATE OPERATION

Table of Contents

Internal Latch Lock

Benefits and Selection Table 143
Typical Application Design Guidelines 144
Set-Up Dimensional Information 145
Component Dimensional Information 146-148
Optional Guided Ejection & Return Sleeves 149
Typical Applications 150

External Latch Lock 151-152
Accelerated Knock-Outs 153

Accelerated Ejectors

Accelerated Ejectors 154-155
Early Ejector Return Assembly 156-157
Knock Out Extension Pucks 158-159

Latch Locks and Pullers

Jiffy Latch-Lok™ Assemblies 160-161
Latch Locks – General Information 162
Latch Locks – Typical Applications 163

CounterView Mold Counters

CounterView R-Series 164
CounterView 100-200 Series 165

Ejection Control

FasTie® Quick Ejector Tie-In System 170-177
Ejector Return Couplings 178
Friction Pullers 179

Limit Switches

Thinswitch® Liquid-Resistant Limit Switch 180
Thinswitch® Limit Switch (Standard & High Temp) 181-182
Global Thinswitch® 183



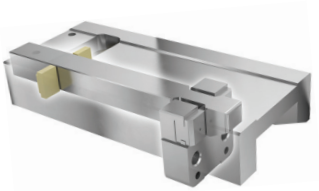

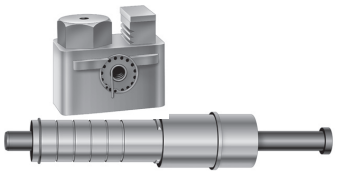

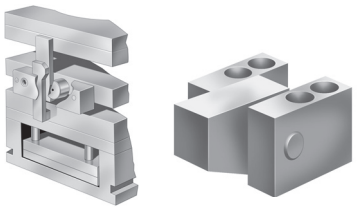







Visit store.dme.net for the latest pricing, product availability and online ordering.

eSTORE
dme.net/estore

INTERNAL LATCH LOCK

Benefits and Selection Table

DME's Internal Latch Lock Allows Precision Control of Mold Plate Latching



U.S. Patent No. 5,494,435

DME's unique internally-mounted latch lock mechanism adapts to a number of mold base sizes and plate thicknesses. It is available in four sizes to accommodate most standard DME stripper plate mold bases. Two travel ranges and two center puller pin lengths are available for each of the three latch lock sizes. Once installed, DME's Internal Latch Locks control the sequence of one parting line opening after the first parting line has traveled a predetermined distance. After installation there are no adjustments that can be accidentally changed. The Internal Latch Locks are most commonly used on DME AX-Series stripper plate mold bases but can be used on other DME stripper plate mold bases as well.

- Four diameter sizes to choose from – 28mm, 34mm, 45mm and 60mm – depending on the size of the mold and the application
- Two travel ranges and two center puller pin lengths to choose from for each of the four sizes
- Hardened steel components for longer life
- Latching mechanism has built-in travel limitation
- When latch is released, latching cams hold released stripper plate in fully traveled position
- Easy set-up of timing for latching mechanism
- Internal installation avoids interferences with water line connectors and externally mounted components

DME's Internal Latch Lock allows control of the mold plate opening sequence on mold bases with stripper plates. It enables one plate or group of plates to be latched together while the first parting line opening occurs. Then, after a predetermined amount of travel, the latch lock releases the latched plate or group of plates for the remaining parting line or parting lines to open.

INTERNAL LATCH LOCK SELECTION CHART

BASIC LATCH SIZE	INTERNAL LATCH LOCK ASSEMBLY ITEM NUMBER	"T" TRAVEL RANGE MINIMUM		"T" TRAVEL RANGE MAXIMUM		CENTER PULLER PIN LENGTH OPTIONS		RECOMMENDED MAXIMUM STANDARD DME MOLD BASE WIDTH	MAXIMUM RECOMMENDED LOAD VALUES (PER ASS'Y.) STATIC	MAXIMUM RECOMMENDED LOAD VALUES (PER ASS'Y.) DYNAMIC
			in		in		in			
28mm DIA (Small)	DKL2811	5	.197	30	1.181	140	5.512	11-⅞ in	10 kN (2,248 lbf)	1kN (220 lbs)
	DKL2812					250	9.843			
	DKL2821	30	1.181	55	2.165	140	5.512			
	DKL2822					250	9.843			
34mm DIA (Medium)	DKL3411	6	.236	41	1.614	160	6.299	16-½ in	20 kN (4,500 lbf)	2kN (440 lbs)
	DKL3412					280	11.024			
	DKL3421	41	1.614	76	2.992	160	6.299			
	DKL3422					280	11.024			
45mm DIA (Large)	DKL4511	12	.472	58	2.283	200	7.874	23-¾ in	30 kN (6,740 lbf)	3kN (838 lbs)
	DKL4512					310	12.205			
	DKL4521	58	2.283	104	4.094	200	7.874			
	DKL4522					310	12.205			
60mm DIA (Extra)	DKL6011	15	.590	80	3.149	270	10.630	19-¾ in for 2 units 35-½ for 4 units	40 kN (8,992 lbf)	5.2kN (1,146 lbs)
	DKL6012					370	14.567			
	DKL6021	80	3.149	130	5.118	270	10.630			
	DKL6022					370	14.567			

INTERNAL LATCH LOCK

Typical Application Design Guidelines

Basic Selection and Application Design Guidelines

1. Select the appropriate Internal Latch Lock size – 28mm diameter (small), 34mm diameter (medium), 45mm diameter (large) or 60mm diameter (extra) based on the width of the mold base, as indicated in the chart on page 123. However, large molds, thick plates or heavy load applications may require the next largest size assembly than is specified.
2. Select the appropriate travel range from the two choices for each size in the table on page 123. This selection is based on the specific application requirements for the amount of travel that must occur at one parting line prior to the latch being released. The total travel requirements are based on the amount needed for the application as explained above, plus 3mm (.12") minimum additional allowance. This added 3mm minimum will make sure the full required travel has occurred before the latch lock starts its releasing action.
3. Select the appropriate length for the center puller pin from the two choices for each size in the chart. The length of the pin is determined by the specific application including the mold base plate thicknesses, where the pin will be mounted, etc. If possible, the center puller pin should be mounted in the support plate. However, some applications require the center puller pin to be mounted in the bottom clamping plate. This will depend on the travel or the length of the split sleeve component which controls the travel and the plate thicknesses in the mold base.
4. The answers to the above items (1-3) should establish a specific item number assembly from the table on page 123.
5. A minimum of four assemblies are recommended per mold. However, for larger molds, thick plates, or an application where loads are near maximum, additional assemblies and/or next largest size assemblies may be required. An application must never exceed the maximum recommended load values. A balanced load must be maintained to avoid cocking and binding which could cause severe overloading. Only one size latch lock assembly should be used in each mold base.
6. The center puller pin should be counterbored into its mounting plate 4mm (.157") minimum for most applications, as shown in the drawings at right. This counterbore aligns the center puller pin with the other components in the assembly.



U.S. Patent No. 5,494,435

7. The most common applications for the latch locks are for the DME AX-Series stripper plate mold bases. However, many other types of stripper plate mold bases can also be used with this internal plate latching mechanism. It is important to make sure that the leader pin lengths in all applications are long enough to fully engage the stripper plate through its full travel. The latch lock mechanism latches two plates together but is not intended to provide guidance. Instead, it relies on the leader pins in the mold for proper alignment and support of the actuated stripper plates.
8. In the fully latched position the Internal Latch Lock mechanism will allow movement of approximately 0.4mm (.016") for the 28mm diameter and 34mm diameter assemblies and approximately 0.5mm (.020") for the 45mm and 60mm diameter assemblies.
9. Injection molding machine mold opening speed may have to be reduced in order to make sure that excessive shock loading does not occur.
10. The Internal Latch Lock is not recommended for severe load applications.
11. The Internal Latch Lock must not be exposed to temperatures that exceed 150°C (300°F) at any time.
12. Lubricate all metal-to-metal contact areas initially and periodically as required. A good grade of moldmakers non-melting type grease for the appropriate temperature should be used.
13. An optional sleeve can be added to the latch lock that provides two additional functions. However, this optional sleeve is not required for the latch lock function. The optional sleeve can be added to incorporate guided ejection and/or normal ejector assembly return functions in the mold. Refer to page 127 for specific information regarding this sleeve option.

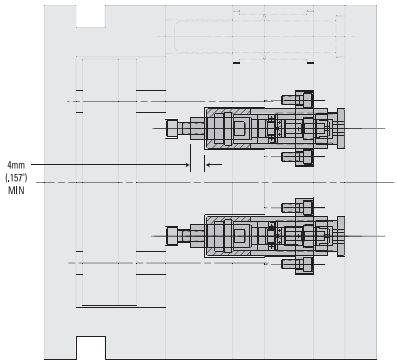

Internal Latch Lock application with center puller pins mounted in the support plate. This is typically done in applications where the travel is shorter and/or when mold plates are thicker. DME AX-Series mold base is shown in this typical application.

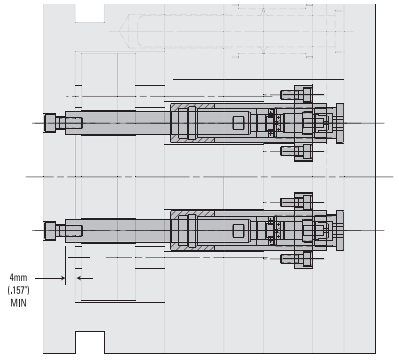

Internal Latch Lock application with center puller pin mounted in the bottom clamping plate. This is typically done in applications where the travel is longer and/or when mold plates are thinner. (Some applications may require a thicker than standard bottom clamping plate.) DME AX-Series mold base is shown in this typical application.

INTERNAL LATCH LOCK

Set-Up Dimensional Information

DME AX-Series stripper plate mold base is

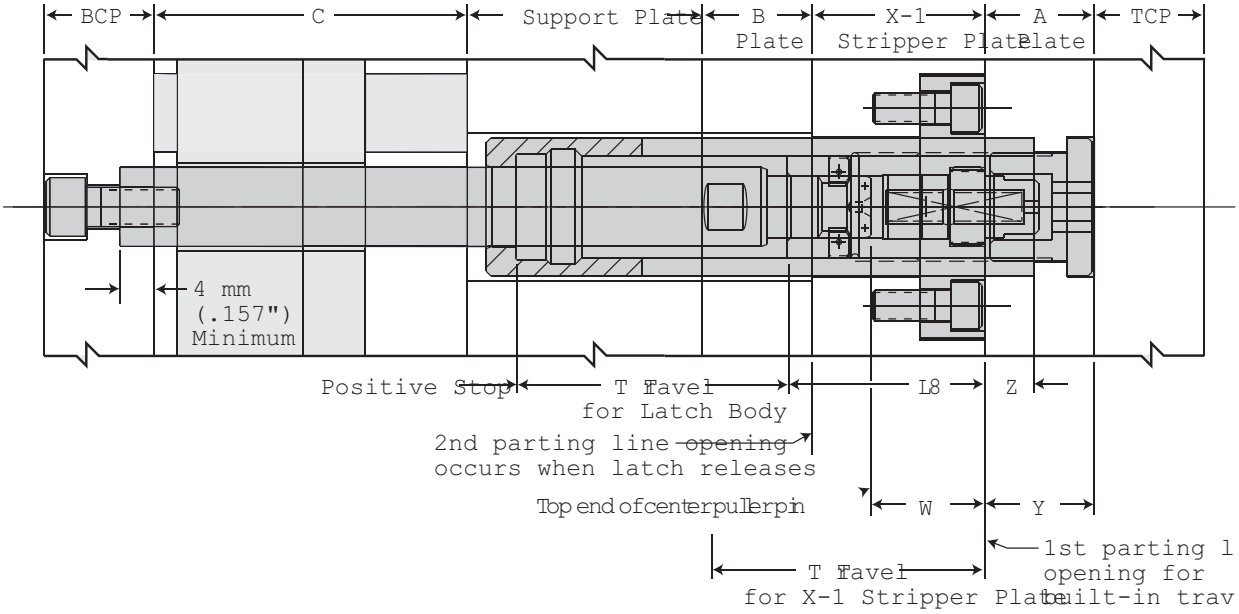

IMPORTANT SET-UP DIMENSIONS (Refer to Drawing Above)													
BASIC LATCH SIZE	INTERNAL LATCH LOCK ASSEMBLY ITEM NUMBER	"T"(1) TRAVEL RANGE				L8 BODY FOR CAM FINGERS LENGTH DIMENSION		W(2) CENTER PULLER PIN SET-UP DIMENSIONS		Y(3) MOUNTING PLATE THICKNESS RANGE		Z(4) C'BORE DEPTH IN MOUNTING PLATE	
		MINIMUM		MAXIMUM									
		mm	in	mm	in	mm	in	mm	in	mm	in	mm	in
28mm DIA (Small)	DKL2811	5	.197	30	1.181	40	1.575	$23^{\pm 0.1}$	$.906^{\pm .004}$	22 to 35	.866 to 1.378	+0.04 -0 10	+.0016 -.0000 .3937
	DKL2812												
	DKL2821	30	1.181	55	2.165								
	DKL2822												
34mm DIA (Medium)	DKL3411	6	.236	41	1.614	51	2.008	$32^{\pm 0.1}$	$1.260^{\pm .004}$	27 to 47.6	1.063 to 1.875	+0.04 -0 12	+.0016 -.0000 .4724
	DKL3412												
	DKL3421	41	1.614	76	2.992								
	DKL3422												
45mm DIA (Large)	DKL4511	12	.472	58	2.283	68	2.677	$43^{\pm 0.1}$	$1.693^{\pm .004}$	35 to 60	1.375 to 2.375	+0.04 -0 16	+.0016 -.0000 .6299
	DKL4512												
	DKL4521	58	2.283	104	4.094								
	DKL4522												
60mm DIA (Extra)	DKL6011	15	.590	80	3.149	92	3.622	$58^{\pm 0.1}$	$2.283^{\pm .004}$	46 to 86	1.811 to 3.385	+0.04 -0 20	+.0016 -.0000 .7874
	DKL6012												
	DKL6021	80	3.149	130	5.118								
	DKL6022												

(1) Supplied to provide maximum travel with no cut off. To reduce travel between maximum and minimum, cut off slotted travel limiting sleeve on threaded end only per installation data. Cut off to no less than minimum travel; maintain close tolerances per installation data.

(2) This set-up dimension is critical and must be maintained as specified to properly locate pin and cam body to latch. Dimension W is from top of X-1 stripper plate to top end of center puller pin. See installation data for additional information.

(3) "Y" mounting plate dimension will be the "A" plate for AX-Series stripper plate mold bases.

(4) This counterbore depth is critical and must be maintained as specied to locate split sleeve, cam body, and pin to latch.

INTERNAL LATCH LOCK

Component Dimensional Information

Assembly Retaining Screw

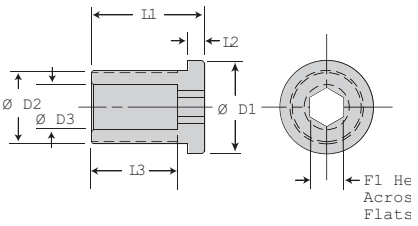

BASIC LATCH SIZE	INTERNAL LATCH LOCK ASSEMBLY ITEM NUMBER	ASSEMBLY RETAINING SCREW								
		COMPONENT ITEM NO	D1 DIA	D2 THREAD	D3 DIA	L1 LENGTH	L2 LENGTH	L3 LENGTH	F1 HEX ACROSS FLATS	
28mm DIA (Small)	DKL2811, DKL2812, DKL2821 & DKL2822	DKL2011	28	M22x1.25	13.5	34	5	26	10	mm
			1.102	None	.531	1.339	.197	1.024	.394	in
34mm DIA (Medium)	DKL3411, DKL3412, DKL3421 & DKL3422	DKL3011	33	M26x1.5	16	46	6	35	12	mm
			1.299	None	.630	1.811	.236	1.378	.472	in
45mm DIA (Large)	DKL4511, DKL4512, DKL4521 & DKL4522	DKL4011	42	M34x1.5	18.4	59	10	42	14	mm
			1.654	None	.724	2.323	.394	1.654	.551	in
60mm DIA (Extra)	DKL6011, DKL6012, DKL6021 & DKL6022	DKL6111	54	M44x1.75	26	59	13	41	19	mm
			2.12	None	1.02	2.323	.511	1.614	.748	in

Cut-off length on thread end only per installation data

Spring Retainer

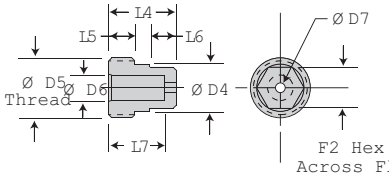

BASIC LATCH SIZE	INTERNAL LATCH LOCK ASSEMBLY ITEM NUMBER	ASSEMBLY RETAINING SCREW									
		COMPONENT ITEM NO	D4 DIA	D5 THREAD	D6 DIA	D7 DIA	L4 LENGTH	L5 LENGTH	L6 LENGTH	L7 LENGTH	F2 HEX. ACROSS FLATS	
28mm DIA (Small)	DKL2812,DKL2811, DKL2822 & DKL2821	DKL2021	12.6	M16X1	6.8	2.6	18	7	7	15	11	mm
			.496	None	.268	.102	.709	.276	.276	.591	.433	in
34mm DIA (Medium)	DKL3412, DKL3411, DKL3422 & DKL3421	DKL3021	15	M19X1	8.3	3	21	8	8	17	13	mm
			.591	None	.327	.118	.827	.315	.315	.669	.512	in
45mm DIA (Large)	DKL4512, DKL4511, DKL4522 & DKL4521	DKL4021	17.2	M34X1.5	10	3.5	25	10	9	21	15	mm
			.677	None	.394	.138	.984	.394	.354	.827	.591	in
60mm DIA (Extra)	DKL6012,DKL6011, DKL6022 & DKL6021	DKL6121	25.1	M30X1	17.4	4	25	10	15	19	22	mm
			.988	None	.685	.157	.984	.394	.590	.748	.866	in

Body for Cam Fingers (Body Only Without Cam Fingers)

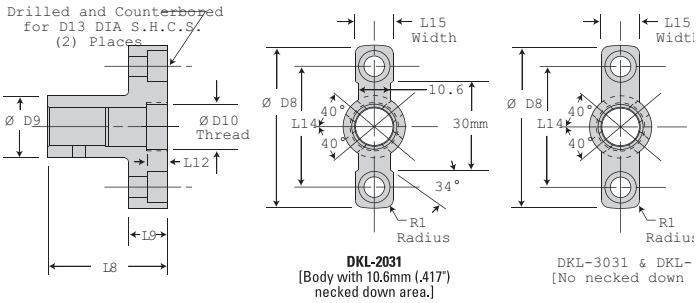

BASIC LATCH SIZE	INTERNAL LATCH LOCK ASSEMBLY ITEM NUMBER	BODY FOR CAM FINGERS														
		COMPONENT ITEM NO	D8 DIA	D9 DIA	D10 THREAD	L8 LENGTH	L9 LENGTH	L12 LENGTH	L14 LENGTH	L15 WIDTH	R1 RADIUS	MOUNTING HOLES & D13 SHCS				
												DRILL DIA	C'BORE DIA	C'BORE DEPTH	D13 SHCS	
28mm DIA (Small)	DKL2811, DKL2812, DKL2821 & DKL2822	DKL2031	54	20.6	M16x1	40	13	7	40	12.6	2.5	6.8	10.4	6.8	M6x1	mm
			2.126	.811	None	1.575	.512	.276	1.575	.496	.098	.268	.409	.268	¼-20	in
34mm DIA (Medium)	DKL3411, DKL3412, DKL3421 & DKL3422	DKL3031	60	24.4	M19x1	51	15	8	46	12.6	2.5	6.8	10.4	6.8	M6x1	mm
			2.362	.961	None	2.008	.591	.315	1.811	.496	.098	.268	.409	.268	¼-20	in
45mm DIA (Large)	DKL4511, DKL4512, DKL4521 & DKL4522	DKL4031	78	32.4	M24x1	68	20	10	60	17	4	8.4	13.7	8.5	M8x1.25	mm
			3.071	1.276	None	2.677	.787	.394	2.362	.669	.157	.331	.539	.335	5/16-18	in
60mm DIA (Extra)	DKL6011, DKL6012, DKL6021 & DKL6022	DKL6031	99	42.0	M30x1	92	27	10.1	78	23	7	10.4	16.5	10.5	M10x1.5	mm
			3.897	1.653	None	3.622	1.062	.39	3.07	.905	.275	.409	.649	.413	⅜-16	in

Do not alter body in any way

Use either metric or inch socket head cap screws

NOTE:

All dimensions shown for components are intended for drawing layout purposes only and in some cases have been rounded off. These dimensions are not intended to be used for the manufacturing of any components. Also, where the same diameter dimension is shown for parts that fit together, the tolerances create the appropriate clearance or fit.

INTERNAL LATCH LOCK

Component Dimensional Information

Spring for Holding Pin

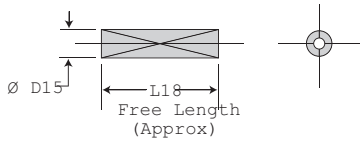

BASIC LATCH SIZE	INTERNAL LATCH LOCK ASSEMBLY ITEM NUMBER	SPRING FOR HOLDING PIN			
		COMPONENT ITEM NO	D15 DIA	L18 FREE LENGTH	
28mm DIA (Small)	DKL2811, DKL2812,	DKL2041	6.5	56	mm
	DKL2821 & DKL2822		.256	2.20	in
34mm DIA (Medium)	DKL3411, DKL3412,	DKL3041	8	70	mm
	DKL3421 & DKL3422		.315	2.76	in
45mm DIA (Large)	DKL4511, DKL4512,	DKL4041	9.7	90	mm
	DKL4521 & DKL4522		.382	3.54	in
60mm DIA (Extra)	DKL6011, DKL6012,	DKL6041	17	100	mm
	DKL6021 & DKL6022		.669	3.93	in

Holding Pin for Cams

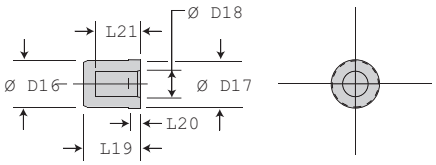

BASIC LATCH SIZE	INTERNAL LATCH LOCK ASSEMBLY ITEM NUMBER	HOLDING PIN FOR CAMS							
		COMPONENT ITEM NO	D16 DIA	D17 DIA	D18 DIA	L19 LENGTH	L20 LENGTH	L21 LENGTH	
28mm DIA (Small)	DKL2811, DKL2812,	DKL2051	12.3	12.9	6.8	15	3	12	mm
	DKL2821 & DKL2822		.484	.508	.268	.591	.118	.472	in
34mm DIA (Medium)	DKL3411, DKL3412,	DKL3051	14.4	15.4	8.3	23	5	19.5	mm
	DKL3421 & DKL3422		.567	.606	.327	.906	.197	.768	in
45mm DIA (Large)	DKL4511, DKL4512,	DKL4051	19.4	20.4	10	32	7	28	mm
	DKL4521 & DKL4522		.764	.803	.394	1.260	.276	1.102	in
60mm DIA (Extra)	DKL6011, DKL6012,	DKL6051	23.9	25.4	17.4	46	8	40	mm
	DKL6021 & DKL6022		.940	1	.685	1.81	.315	1.574	in

Slotted Travel Limiting Sleeve

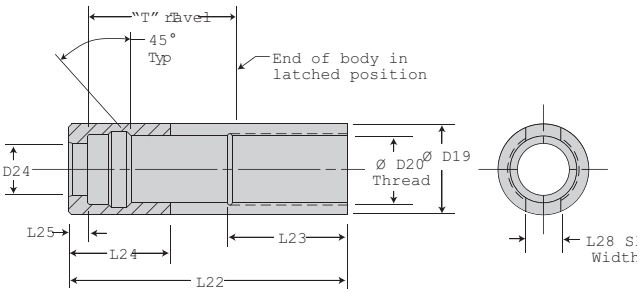

BASIC LATCH SIZE	INTERNAL LATCH LOCK ASSEMBLY ITEM NUMBER	SLOTTED TRAVEL LIMITING SLEEVE				
		COMPONENT ITEM NO	"T" TRAVEL RANGE – MINIMUM TO MAXIMUM		L22 LENGTH	
			mm	in	mm	in
28mm DIA (Small)	DKL2811 & DKL2812	DKL2071	5 TO 30	.197 TO 1.181	86	3.386
	DKL2821 & DKL2822	DKL2072	30 TO 55	1.181 TO 2.165	111	4.370
34mm DIA (Medium)	DKL3411 & DKL3412	DKL3071	6 TO 41	.236 TO 1.614	111	4.370
	DKL3421 & DKL3422	DKL3072	41 TO 76	1.614 TO 2.992	146	5.748
45mm DIA (Large)	DKL4511 & DKL4512	DKL4071	12 TO 58	.472 TO 2.283	152	5.984
	DKL4521 & DKL4522	DKL4072	58 TO 104	2.283 TO 4.094	198	7.795
60mm DIA (Extra)	DKL6011 & DKL6012	DKL6071	15 TO 80	.590 TO 3.149	208	8.189
	DKL6021 & DKL6022	DKL6072	80 TO 130	3.149 TO 5.118	258	10.157

Supplied to provide maximum travel with no cutoff. To reduce travel between maximum and minimum, cut off on threaded end only per installation data.

NOTE:
All dimensions shown for components are intended for drawing layout purposes only and in some cases have been rounded off. These dimensions are not intended to be used for the manufacturing of any components. Also, where the same diameter dimension is shown for parts that fit together, the tolerances create the appropriate clearance or fit.

BASIC LATCH SIZE	INTERNAL LATCH LOCK ASSEMBLY ITEM NUMBER	SLOTTED TRAVEL LIMITING SLEEVE								
		COMPONENT ITEM NO	D19 DIA	D20 DIA THREAD	D24 DIA	L23 LENGTH	L24 LENGTH	L25 LENGTH	L28 SLOT	
28mm DIA (Small)	DKL2811, DKL2812,	DKL2071 & DKL2072	28	M22x1.25	16	37	33	6	10.8	mm
	DKL2821 & DKL2822		1.1024	None	.630	1.457	1.299	.236	.425	in
34mm DIA (Medium)	DKL3411, DKL3412,	DKL3071 & DKL3072	34	M26x1.5	19	49	43	7	12.8	mm
	DKL3421 & DKL3422		1.3386	None	.748	1.929	1.692	.276	.504	in
45mm DIA (Large)	DKL4511, DKL4512,	DKL4071 & DKL4072	45	M34x1.5	26	65	58	10	17.3	mm
	DKL4521 & DKL4522		1.7717	None	1.024	2.559	2.283	.394	.681	in
60mm DIA (Extra)	DKL6011, DKL6012,	DKL6071 & DKL6072	60	M44x1.75	35	80	81	16	23.3	mm
	DKL6021 & DKL6022		2.362	None	1.377	3.149	3.188	.630	.917	in

INTERNAL LATCH LOCK

Component Dimensional Information

Cam Finger Replacement Kit

With (4) Cam Fingers, (6) Locking Pins, and

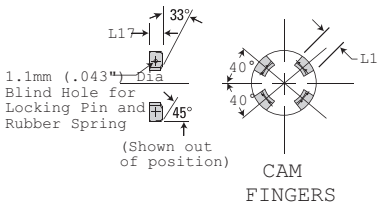

*Two extra locking pins and rubber springs are included.

BASIC LATCH SIZE	INTERNAL LATCH LOCK ASSEMBLY ITEM NUMBER	CAM FINGER REPLACEMENT KIT			
		COMPONENT ITEM NO	L16 WIDTH	L17 THICK	
28mm DIA (Small)	DKL2811, DKL2812, DKL2821 & DKL2822	DKL2062	5.8	4.2	mm
			.228	.165	in
34mm DIA (Medium)	DKL3411, DKL3412, DKL3421 & DKL3422	DKL3062	7.2	4.8	mm
			.283	.189	in
45mm DIA (Large)	DKL4511, DKL4512, DKL4521 & DKL4522	DKL4062	9	6	mm
			.354	.236	in
60mm DIA (Extra)	DKL6011, DKL6012, DKL6021 & DKL6022	DKL6062	11.6	8	mm
			.456	.315	in

Center Puller Pin

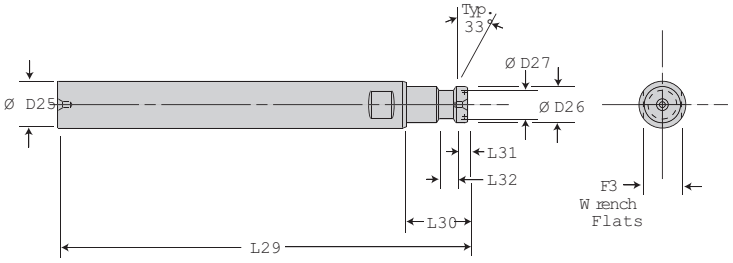

BASIC LATCH SIZE	INTERNAL LATCH LOCK ASSEMBLY ITEM NUMBER	CENTER PULLER PIN		
		COMPONENT ITEM NO	L29 LENGTH	
			mm	in
28mm DIA (Small)	DKL2811 & DKL2821	DKL2081	140	5.512
	DKL2812 & DKL2822	DKL2082	250	9.843
34mm DIA (Medium)	DKL3411 & DKL3421	DKL3081	160	6.299
	DKL3412 & DKL3422	DKL3082	280	11.024
45mm DIA (Large)	DKL4511 & DKL4521	DKL4081	200	7.874
	DKL4512 & DKL4522	DKL4082	310	12.205
60mm DIA (Extra)	DKL6011 & DKL6021	DKL6081	270	10.62
	DKL6012 & DKL6022	DKL6082	370	14.56

Cutoff on large diameter end only per installation data

NOTE:
All dimensions shown for components are intended for drawing layout purposes only and in some cases have been rounded off. These dimensions are not intended to be used for the manufacturing of any components. Also, where the same diameter dimension is shown for parts that fit together, the tolerances create the appropriate clearance or fit.

BASIC LATCH SIZE	INTERNAL LATCH LOCK ASSEMBLY ITEM NUMBER	CENTER PULLER PIN									
		COMPONENT ITEM NO	D25 DIA	D26 DIA	D27 DIA	D30 Length	D31 Length	D32 Length	F3 Across Flats	D28 TAP – REC.	
28mm DIA (Small)	DKL2811, DKL2812,	DKL2081 & DKL2082	16	12.4	9.8	21	4	6.7	13	M8x1.25	mm
	DKL2821 & DKL2822		.6299	.488	.386	.827	.157	.264	.512	5/16-18	in
34mm DIA (Medium)	DKL3411, DKL3412,	DKL3081 & DKL3082	19	14.5	11.7	24	4.6	7.6	15	M10x1.5	mm
	DKL3421 & DKL3422		.7480	.571	.461	.945	.181	.299	.591	3/8-16	in
45mm DIA (Large)	DKL4511, DKL4512,	DKL4081 & DKL4082	26	19.5	15.9	31	5.5	9.5	22	M12X1.75	mm
	DKL4521 & DKL4522		1.0236	.768	.626	1.220	.217	.374	.866	1/2-13	in
60mm DIA (Extra)	DKL6011, DKL6012,	DKL6081 & DKL6082	35	24	19	40	7.53	12	29	M15x2	mm
	DKL6021 & DKL6022		1.378	.944	.748	1.574	.296	.472	1.142	5/8-11	in

Use either metric or inch tap and socket head cap screw (tap after pin cutoff)

BASIC LATCH SIZE	INTERNAL LATCH LOCK ASSEMBLY ITEM NO.	CENTER PULLER PIN			SLOTTED TRAVEL LIMITING SLEEVE			COMPONENT ITEM NUMBERS						
		COMPONENT ITEM NO	L17 LENGTH		COMPONENT ITEM NO	"T" TRAVEL RANGE		ASSEMBLY RETAINING SCREW	SPRING RETAINER	BODY FOR CAM FINGERS WITHOUT CAM FINGERS	BODY FOR CAM FINGERS WITH (4) CAM FINGERS	CAM FINGER REPLACEMENT KIT	SPRING FOR HOLDING PIN	HOLDING PIN FOR CAMS
			mm	in		mm	in							
28mm DIA (Small)	DKL2811	DKL2081	140	5.512	DKL2071	5 to 30	.197 to 1.181	DKL2011	DKL2021	DKL2031	DKL2032	DKL2062	DKL2041	DKL2051
	DKL2812	DKL2082	250	9.843										
	DKL2821	DKL2081	140	5.512	DKL2072	30 to 55	1.181 to 2.165							
	DKL2822	DKL2082	250	9.843										
34mm DIA. (Medium)	DKL3411	DKL3081	160	6.299	DKL3071	6 to 41	.236 to 1.614	DKL3011	DKL3021	DKL3031	DKL3032	DKL3062	DKL3041	DKL3051
	DKL3412	DKL3082	280	11.024										
	DKL3421	DKL3081	160	6.299	DKL3072	41 to 76	1.614 to 2.992							
	DKL3422	DKL3082	280	11.024										
45mm DIA (Large)	DKL4511	DKL4081	200	7.874	DKL4071	12 to 58	.472 to 2.283	DKL4011	DKL4021	DKL4031	DKL4032	DKL4062	DKL4041	DKL4051
	DKL4512	DKL4082	310	12.205										
	DKL4521	DKL4081	200	7.874	DKL4072	58 to 104	2.283 to 4.094							
	DKL4522	DKL4082	310	12.205										
60mm DIA (Extra)	DKL6011	DKL6081	270	10.62	DKL6071	15 to 80	.590 to 3.149	DKL6011	DKL6021	DKL6031	DKL6032	DKL6062	DKL6041	DKL6051
	DKL6012	DKL6082	370	14.56										
	DKL6021	DKL6081	270	10.62	DKL6072	80 to 130	3.149 to 5.118							
	DKL6022	DKL6082	370	14.56										

Body for Cam Fingers with Cam Fingers installed includes: (1) body, (4) cam fingers, (4) locking pins, and (4) rubber springs

Cam Finger Replacement Kit includes: (4) cam fingers, (6) locking pins, and (6) rubber springs (two extra locking pins and rubber springs are included).

INTERNAL LATCH LOCK

Optional Guided Ejection and Return Sleeves

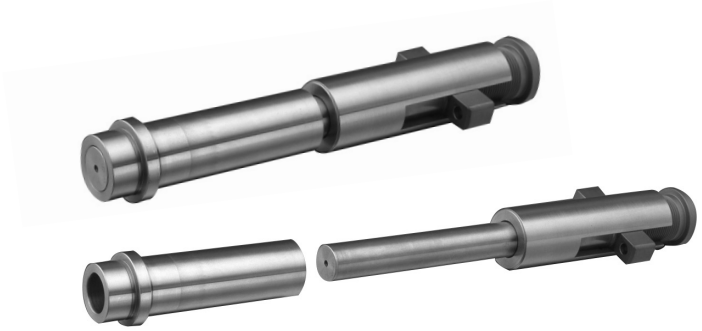

U.S. Patent No. 5,494,435

Optional Guided Ejection and Return Sleeves are no longer available

Add Guided Ejection and Return Pin Functions to Internal Latch Lock Mechanism with the Optional Sleeve

The optional Guided Ejection and Return Sleeves, although not required for the Internal Latch Lock, can add two functions to the mold base that are typically required in most molds. These optional sleeves can add guided ejection and ejector assembly return functions to the mold base. Additionally, these added functions fall within the space envelope of the plate latching mechanism. However, these optional sleeves do not create an early ejection return system that is occasionally required in some applications.

- Sleeves can add guided ejection function to mold base along with plate latching mechanism
- Sleeves can replace function of return pins in mold base for most applications using the plate latching mechanism
- Sleeves fit around the center puller pin of the plate latching mechanism and are mounted in the ejector assembly, thus eliminating the need for additional mold space usually required for the guided ejection and return pin functions

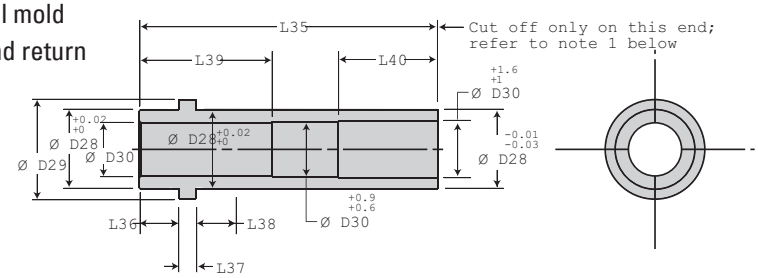

BASIC LATCH SIZE	INTERNAL LATCH LOCK ASSEMBLY ITEM NUMBER	OPTIONAL SLEEVES – GUIDED EJECTION AND RETURN SLEEVE DIMENSIONS																					
		COMPONENT ITEM NO	L35 LENGTH		D28 DIA		D29 DIA		D30 DIA		L36 LENGTH		L37 THICKNESS		L38 LENGTH		L39 LENGTH		L40 LENGTH		L41 MIN	
			mm	in	mm	in	mm	in	mm	in	mm	in	mm	in	mm	in	mm	in	mm	in	mm	in
28mm DIA (Small)	DKL2811, DKL2812, DKL2821 & DKL2822	DKL2101	90	3.543	24	.9449	30	1.181	16	.630	12	.472	5	.197	14	.55	40	1.57	30	1.18	12	.472
		DKL2102	140	5.512																		
34mm DIA (Medium)	DKL3411, DKL3412, DKL3421 & DKL3422	DKL3101	110	4.331	28	1.1024	35	1.378	19	.748	14	.551	6	.236	16	.63	50	1.97	35	1.38	15	.591
		DKL3102	160	6.299																		
45mm DIA (Large)	DKL4511, DKL4512, DKL4521 & DKL4522	DKL4101	140	5.512	38	1.4961	46	1.811	26	1.024	18	.709	8	.315	20	.79	70	2.76	40	1.57	20	.787
		DKL4102	200	7.874																		
60mm DIA (Extra)	DKL6011, DKL6012, DKL6021 & DKL6022	OPTIONAL SLEEVES NOT OFFERED FOR THIS DIAMETER																				

NOTE:

1. Choose the appropriate length sleeve so that it can be cut off to a length that will fully return the ejector assembly. See installation data.
2. The center puller pins must support and guide the sleeves, as well as the ejector assembly. The pins must have sufficient bearing surface contact as specified by dimension "L41" minimum.
3. Additional bearing surface contact for the center puller pins may require a thicker bottom clamping plate or the addition of another plate to the bottom of the mold for some applications. See installation data.
4. A minimum of four assemblies are typically recommended per mold. However, for larger molds, thick plates, or an application where loads are near maximum, additional assemblies and/or next largest size assemblies may be required. An application must never exceed the maximum recommended load values. A balanced load must be maintained to avoid cocking and binding which could cause severe overloading. Only one size latch lock assembly should be used in each mold base.

INTERNAL LATCH LOCK

Typical Applications

TO FLOAT “A” PLATE AWAY FROM TOP CLAMP PLATE WHILE LOCKING “A” AND “B” PLATES.
CENTER ROD TIED INTO BOTTOM CLAMP PLATE.

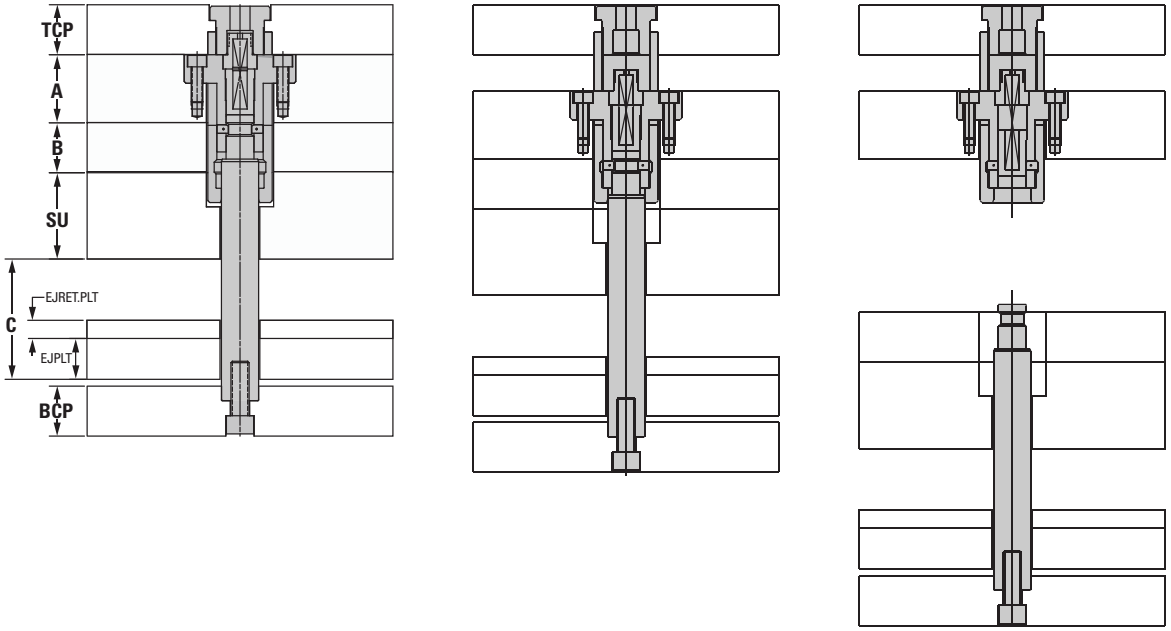

TO FLOAT “X-1” PLATE AWAY FROM “A” PLATE WHILE LOCKING “X-1” AND “B” PLATES.
CENTER ROD TIED INTO BOTTOM CLAMP PLATE.

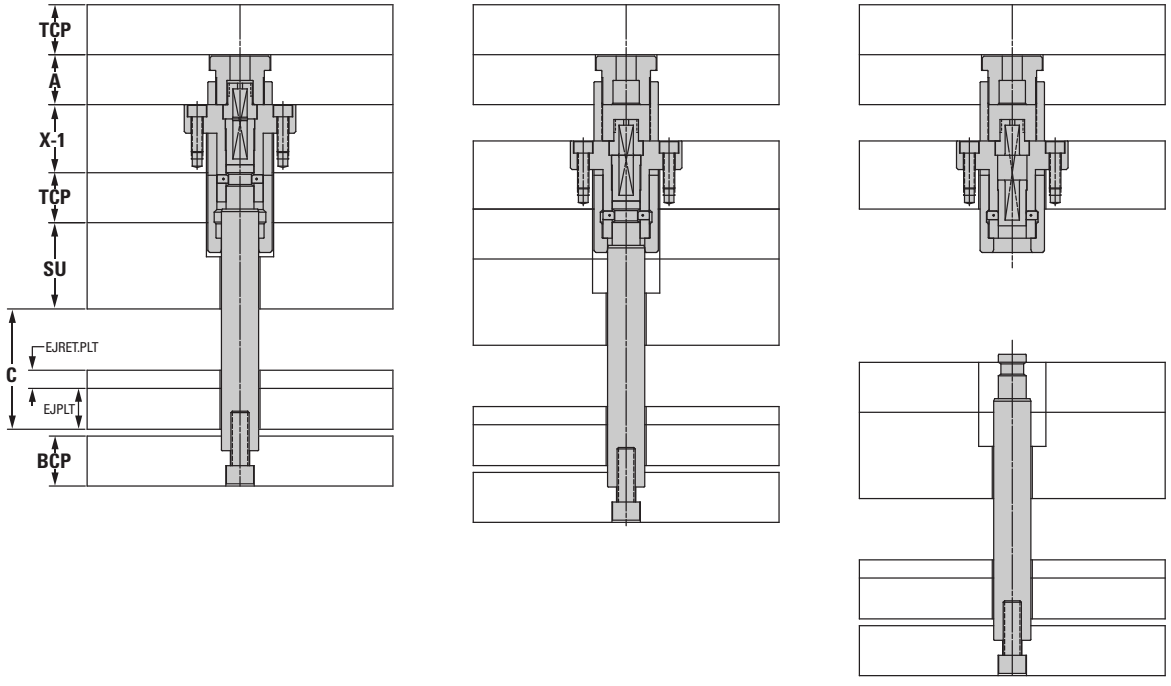

EXTERNAL LATCH LOCK

Positive and Precise Positioning of Floating Plates

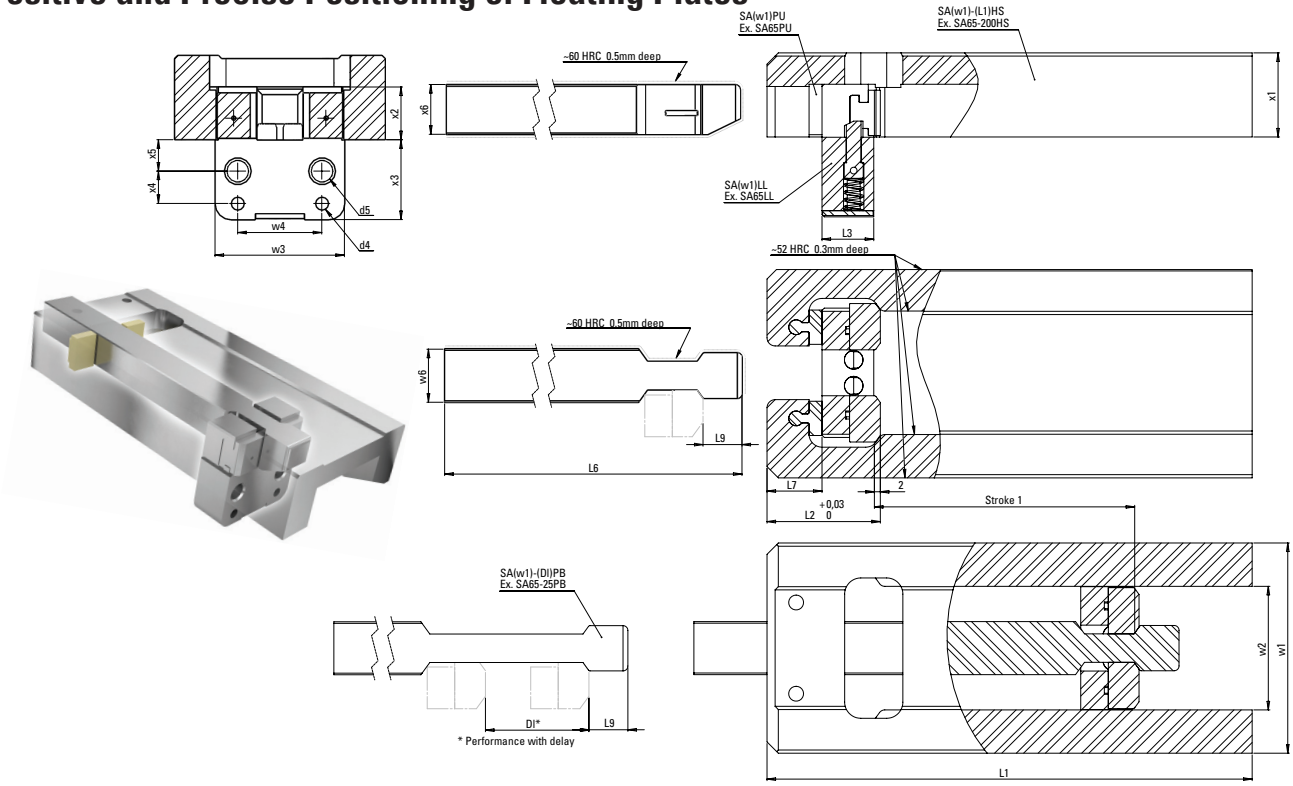

ITEM NUMBER SA(W1)-(L1)-(D1)	w1	L1	D1	x1	w2	L2	x2	w3	L3	x3	w4	d4	x4	d5	x5	w6	L6	x6	L7	L9	STROKE 1
SA55-130-00	55	130	00	23	32.2	32.6	14	34	15	23	22	4	10	M6	7	12.4	130	12.4	15.6	10.5	4-60
SA55-130-15			15														160				
SA55-130-25			25																		
SA55-160-00		160	00														130				4-90
SA55-160-15			15														160				
SA55-160-25			25																		
SA65-150-00	65	150	00	26	38.2	35	16.3	40	16	25	26	4	10	M8	10	16.4	150	15.4	17	12	5-80
SA65-150-18			18														200				
SA65-150-32			32																		
SA65-200-00		200	00														150				5-120
SA65-200-18			18														200				
SA65-200-32			32																		
SA80-200-00	80	200	00	31	49.2	42	19	52	20	30	32	5	12	M10	12	20.4	200	16.4	20	14	6-110
SA80-200-25			25														250				
SA80-200-50			50																		
SA80-250-00		250	00														200				6-160
SA80-250-25			25														250				
SA80-250-50			50																		
SA95-250-00	95	250	00	38	62.2	54	24	66	27	38	40	6	15	M12	14	25.4	250	23	25	16	7-140
SA95-250-30			30														300				
SA95-250-55			55																		
SA95-300-00		300	00														250				7-190
SA95-300-30			30														300				
SA95-300-55			55																		

EXTERNAL LATCH LOCK

DME External Latch Lock Allows Precision Control of Mold Plate Latching Operation

- Ideal for molds with floating plates, including stripper plates & 3-plate molds
- Floating plates are positively locked in place during mold opening and closing, preventing potential mold damage
- Ensures floating plates will be where they should be throughout the life of the mold
- Positively and precisely positions plates every time the mold opens and closes, allowing molds to run faster
- Simplifies mold design while improving design flexibility
- Designed and engineered to hold large loads while saving space inside the mold
- Simple design reduces machining time & labor costs
- Standardized components simplify mold maintenance
- Eliminates springs & associated play in plates, and reduces mold maintenance
- Standard sizes accommodate most mold base sizes and stroke lengths
- (4) sizes of housings with (2) housing lengths each; (3) puller bar lengths
- Puller bars & housing may be shortened as desired
- Stroke may be with or without delay

Example without delayed stroke sequence

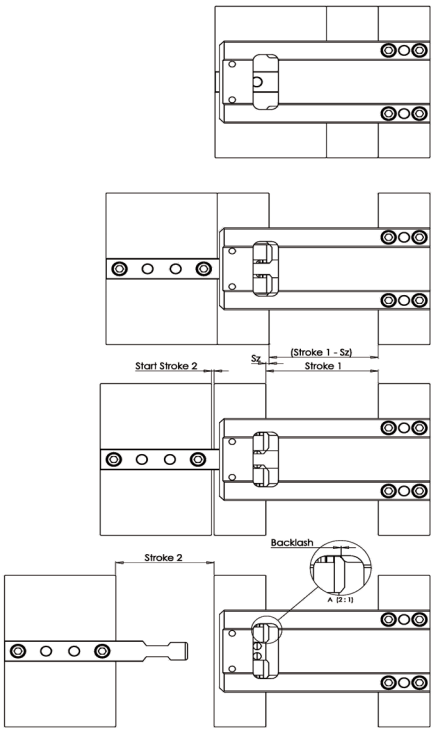

Example with delayed stroke sequence

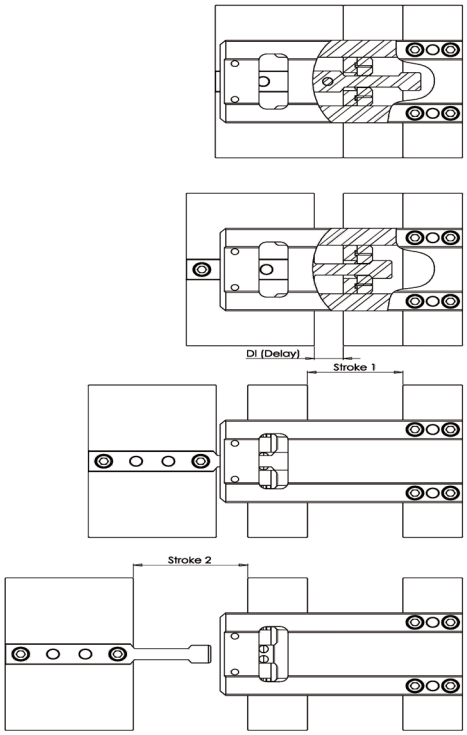

w1 (2PCS)	INTENDED MOLD SIZE	TR MAX. (TRACTION FORCE)	LF MAX.(LOCKING FORCE)	Sz	BACKLASH
55	246 x 246	20kN	1.5kN	2.0	0.25
65	396 x 396	35kN	2.0kN	2.3	0.25
80	646 x 646	50kN	3.0kN	2.7	0.30
95	796 x 796	80kN	4.0kN	3.2	0.35

SA..PU - shock absorber, buffer damper
DI - maximum delayed stroke
Sz - switching zone, stroke 2 begins slightly before the end of stroke 1
Backlash - Segments need clearance/play to allow the locking/unlocking sequence (built into the product)
TF - traction force (always retain the lowest)
LF - locking force (maximum holding force after stroke 1)

ACCELERATED KNOCK-OUTS

Accelerated Knock-Outs – Typical Application

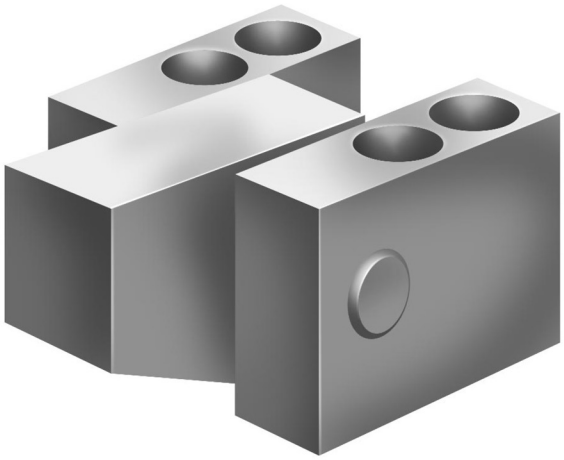

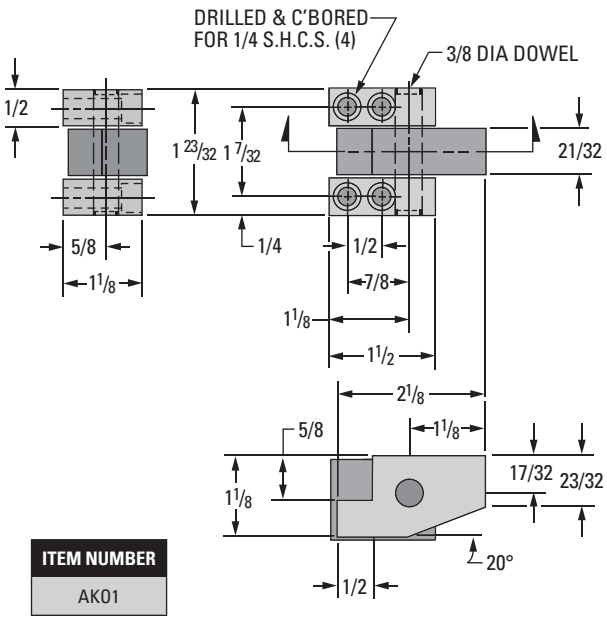

ITEM NUMBER
AK01

The DME Accelerated Knock-Outs are simple in design, using a pivot-type motion for accelerated ejection. Mechanical advantage is 1:1. They will accommodate ejector pins up to 3/8" in diameter. (Pins with head diameters greater than 5/8" can be ground down to fit.)

Simplicity of design permits DME Accelerated Knock-Outs either to be inserted into the ejector plate (as shown below) or top-mounted, depending on space available for the ejection movement.

Typical Applications

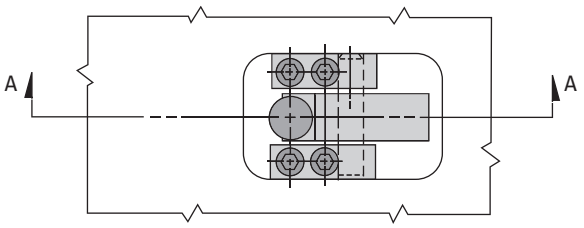

VIEW C-C

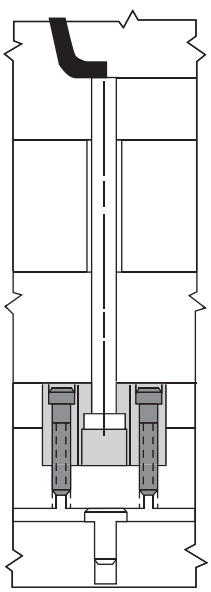

SECTION B-B
APPLICATION 1

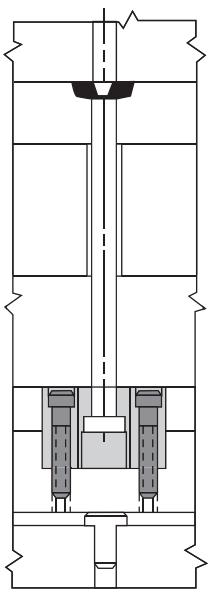

SECTION B-B
APPLICATION 2

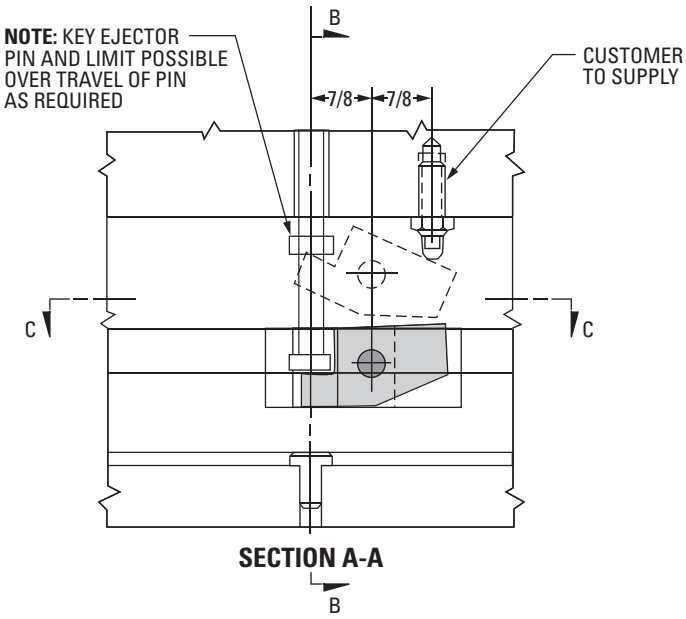

SECTION A-A

ACCELERATED EJECTORS

Accelerated Ejectors – General Information

DME Accelerated Ejectors use a rack and pinion mechanism to provide up to 5/8" additional ejector stroke. Their simple, linear movement can be used to increase the speed and stroke of ejector pins, ejector sleeves or entire ejector assemblies. The flanges and rounded corners on these units facilitate installation within the ejector assembly. The rectangular cross-section of the racks prevents them from rotating. Included with each unit is a bumper stud, which ensures positive return of the racks when the ejector assembly is fully returned.

DME Accelerated Ejectors are available in two sizes (small or regular) and two types (pin or bumper). The pin type units are used for individual ejector pin acceleration (one unit per pin). Bumper type units are used for accelerating the entire upper ejector assembly in a dual ejector assembly mold (a minimum of four units are normally used in this application).

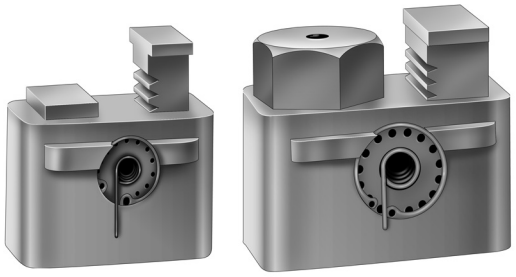

U.S. Patent No. 3,893,644

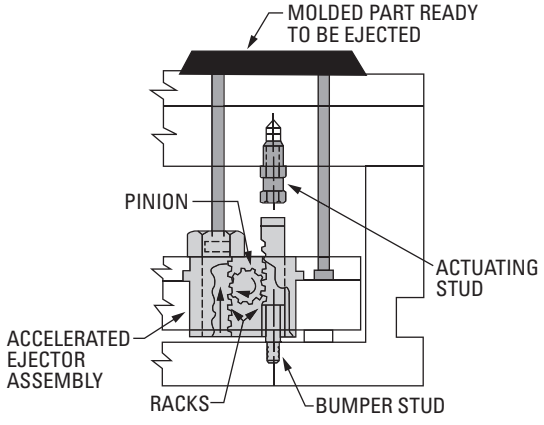

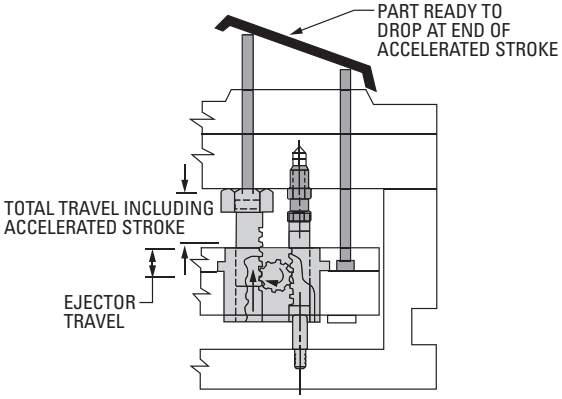

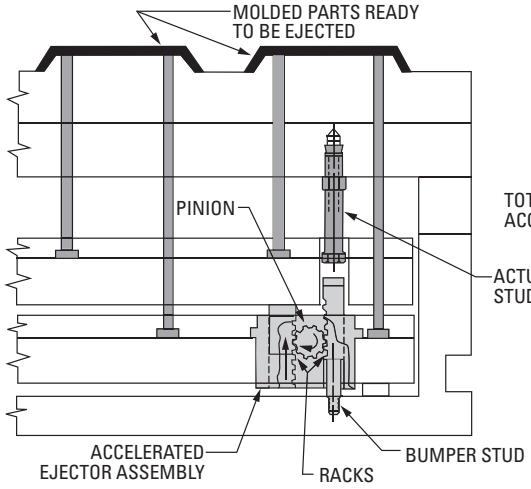

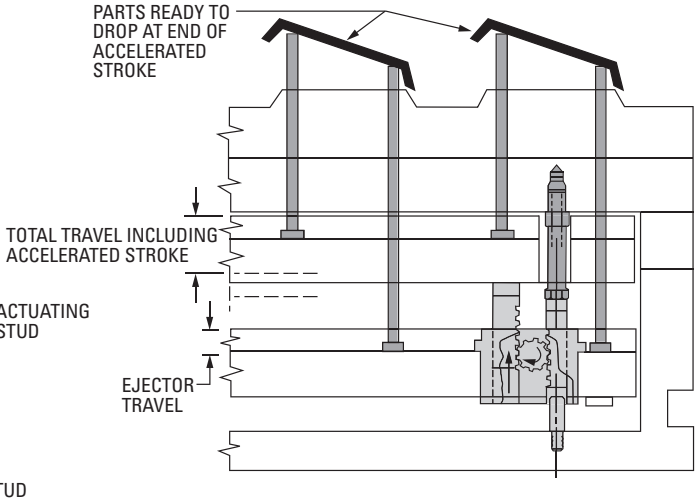

ITEM NUMBER	DESCRIPTION	USED WITH PLATE THICKNESS		EJECTOR PIN DIAMETER (MAXIMUM)
		EJECTOR PLATE	EJECTOR RETAINER PLATE	
AEP10	PIN TYPE – SMALL	1"	½	¼
AEP20	PIN TYPE – REGULAR	1⅛	½ OR ⅝	½
AEB10	BUMPER TYPE – SMALL	1"	1/2	—
AEB20	BUMPER TYPE – REGULAR	1⅛	½ OR ⅝	—

ACCELERATED EJECTORS

Accelerated Ejectors – General Information

- Stroke for all units = 5/8 maximum
- Keep pinion lubricated
- Do not use with opposing spring pressure

Bumper Type

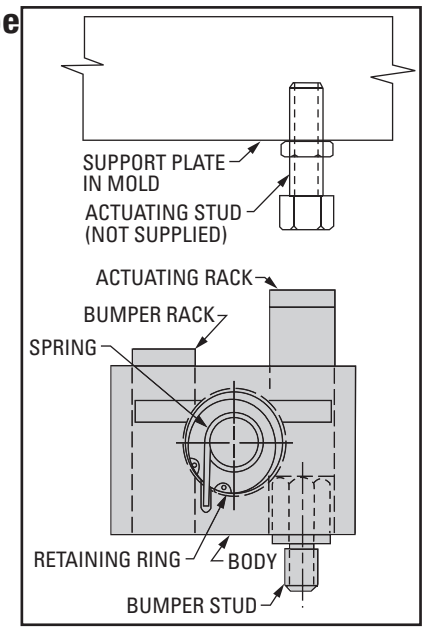

Pin Type

TEETH
AEP-20 PIN TYPE/ AEB-20 BUMPER TYPE
PINION – 16 PITCH 1.000 P.D. – 16 TEETH 20° PRESSURE ANGLE
AEP-10 PIN TYPE/ AEB-10 BUMPER TYPE
PINION – 20 PITCH .700 P.D. – 14 TEETH 20° PRESSURE ANGLE

Accelerated Ejector Dimensions

ITEM NUMBER	A	B	C	E	F	G	H	J	K	L	M	N	P	Q	R
AEP10 • PIN TYPE	+.000 −.002 2.125	+.000 −.002 1.062	+.000 −.002 1.125	9/16	1.600	1.100	1/2	±.002 .125	.510	1.103	1/2	1/2	1.030	1.783	2.025
AEB10 • BUMPER TYPE															—
AEP20 • PIN TYPE	+.000 −.004 2.875	+.000 −.002 1.437	+.000 −.002 1.625	13/16	1 7/8	1 1/4	5/8	±.002 .187	5/8	1 5/8	3/4	3/4	1.016	2 1/16	2 3/8
AEB20 • BUMPER TYPE															—

ITEM NUMBER	S	T	U	V	W	X	Y	Z	AA	BB	CC	DD	EE	FF	GG	HH
AEP10 • PIN TYPE	.550	.425	5/8-18	1/8	.491	.551	.250	1.625	15/16	1/4	1/4	3/4	3/8	5/16-18	3/8	5/8
AEB10 • BUMPER TYPE	—	—	—	—	—				—							
AEP20 • PIN TYPE	.680	1/2	1 1/8-12	1/4	5/8	13/16	.250	2.375	1 3/8	3/16	1/4	.72	1/2	3/8-16	9/16	1 1/8
AEB20 • BUMPER TYPE	—	—	—	—	—				—							

ACCELERATED PLATE EJECTORS



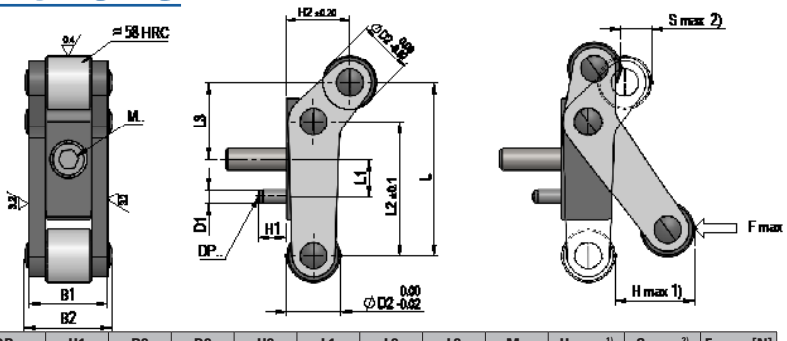

Note:
1. H max.: Maximum stroke
2. S max.: Maximum operation path
3. RP: Because of mechanical return, return pins should be installed in the ejector set.

REF	B1	L	D1	DP..	H1	B2	D2	H2	L1	L2	L3	M..	H max.[1]	S max.[2]	F max. [N]
F152413	13,2	25,8	2,5	2,5 × 10	5	15	8	9,46	5,9	20	11,35	3 × 12	11,6	4,4	1250
F152416	16	32,3	3	3,0 × 12	6	18,5	10	11,82	7	25	14,31	4 × 16	15	5,7	2500
F152422	22	48,5	4	4,0 × 16	8	25	15	17,73	10,5	37,5	21,47	6 × 25	23,5	9,1	3500
F152430	30	64,6	5	5,0 × 20	10	34	20	23,64	14	50	28,63	8 × 30	32	12,5	8000

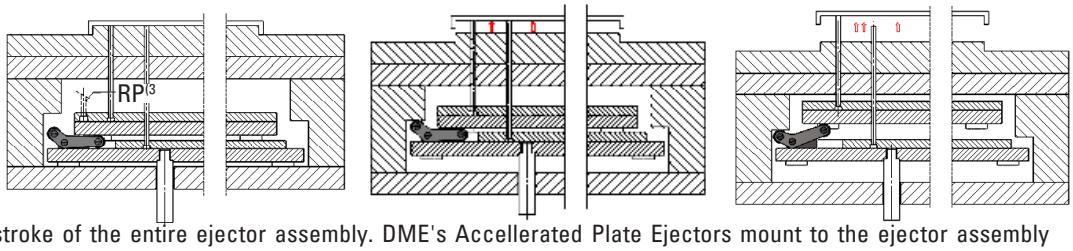

Increase the speed and stroke of the entire ejector assembly. DME's Accellerated Plate Ejectors mount to the ejector assembly providing up to 11.6-32 mm of additional ejector stroke.

EARLY EJECTOR RETURN ASSEMBLY

Early Ejector Return Assembly – Installation

Installation for Ejector Pin Travel

Beyond Stripper Plate

NOTES:

1. Care should be taken to ensure that the ejection assembly is evenly loaded. It is recommended that Guided Ejection be used.
2. Four (4) early ejector return assemblies are recommended per mold. Larger molds may require additional assemblies.
3. Timing of all units to be within ±.005 inch.

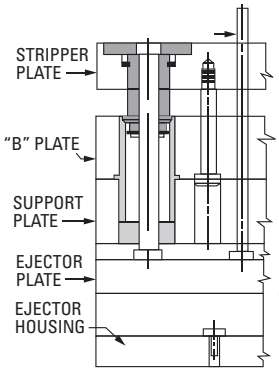

STRIPPER PLATE MOVES FORWARD UNTIL CAM FINGERS SLIP OUTWARDLY INTO C'BORE IN BUSHING AND EJECTOR PLATE CONTINUES TO TRAVEL

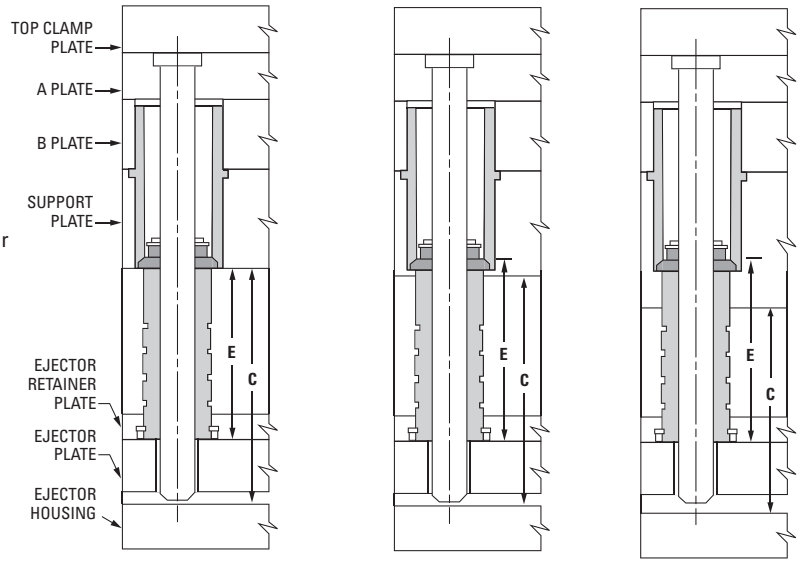

108A THRU 1123A STANDARD MOLD BASE

1212A THRU 1329A STANDARD MOLD BASE

1518A THRU 2435A STANDARD MOLD BASE

Determining Post Length

***Remove this amount of stock from bottom end of post.**

C	MOLD BASE SIZE						C
	108A THRU 1123A		1212A THRU 1329A		1518A THRU 2435A		
	*	E	*	E	*	E	
2½	2.500	1.309	—	—	—	—	2½
3	2.000	1.809	2.000	1.809	1.500	2.309	3
3½	1.500	2.309	1.500	2.309	1.000	2.809	3½
4	1.000	2.809	1.000	2.809	.500	3.309	4
4½	.500	3.309	.500	3.309	.000	3.809	4½

EARLY EJECTOR RETURN ASSEMBLY

Early Ejector Return Assembly – General Information

DME Early Ejector Return assemblies are designed to save you time and money. Unique design permits simple, low-cost internal installation. Internal installation also helps control your maintenance costs as there are no outside projections to break or bend or to interfere with water line connections or slide movements. All wear surfaces are hardened to provide long life. The drawings below illustrate the simple, positive operation.

Early Ejector Return Unit Assembly

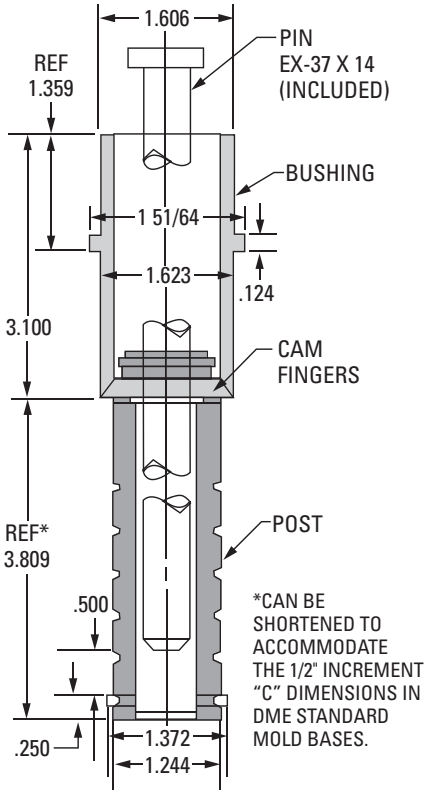

For returning ejector plate before mold is closed

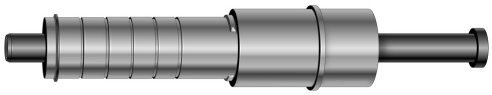

U.S. Patent No. 3,516,302

Early Ejector Return Operation Sequence

Normal Installation in Mold Base

VIEW 1

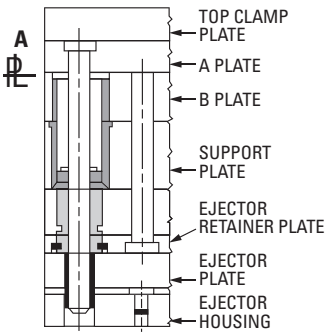

MOLD CLOSED IN MOLDING POSITION

VIEW 2

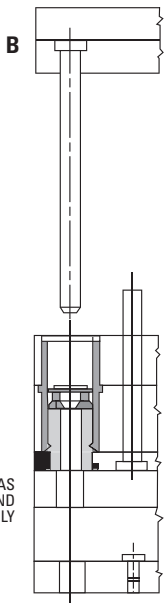

MOLD FULL OPEN – PRESS K.O. ROD HAS PUSHED EJECTOR PLATE FORWARD AND CAM FINGERS HAVE SLIPPED INWARDLY FROM C'BORE IN BUSHING ALLOWING EJECTOR PLATE TO MOVE FORWARD.

VIEW 3

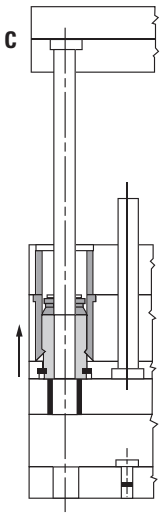

MOLD CLOSING – EARLY EJECTOR RETURN CAM FINGERS HAVE JUST CONTACTED ACTUATOR PIN.

VIEW 4

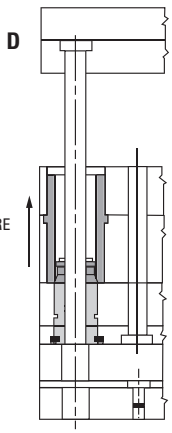

MOLD CONTINUES CLOSING – EJECTOR PLATE HAS BEEN PUSHED ALL THE WAY BACK. CAM FINGERS HAVE SLIPPED OUTWARD INTO COUNTERBORE IN BUSHING ALLOWING ACTUATOR PIN TO SLIP BY. MOLD CONTINUES CLOSING UNTIL COMPLETELY CLOSED AS IN VIEW 1.

ITEM NUMBER
ER101

Early Ejector Return Assembly

ITEM NUMBER
ER101RK

Replacement Parts Kit

Kit consists of:

1. (1) set of cam fingers
2. (1) guide washer
3. (1) snap ring (lower)
4. (1) snap ring (upper)

KNOCK OUT PUCKS

Knock Out Extension Pucks

KO Extension Pucks standardize mold ejector systems by unifying press knock out rod lengths. Wide range of thread configurations available for many different press types.

ITEM NUMBER	THREAD THRU	L DIM
BCPE1038	⅜"-16 UNC	1.052
BCPE1012	½"-13 UNC	
BCPE1058	⅝"-11 UNC	
BCPE1034	¾"-10 UNC	
BCPE10NT *	NONE	
BCPE1538	⅜"-16 UNC	1.552
BCPE1512	½"-13 UNC	
BCPE1558	⅝"-11 UNC	
BCPE1534	¾"-10 UNC	
BCPE15NT *	NONE	

(4) ¼"-20 SHCS included
* NT - No Thread, Mold Maker to Machine



Material:
Steel - 4140 or P20
Hardness - 28-32 HRc
Surface Treatment - Black Oxide

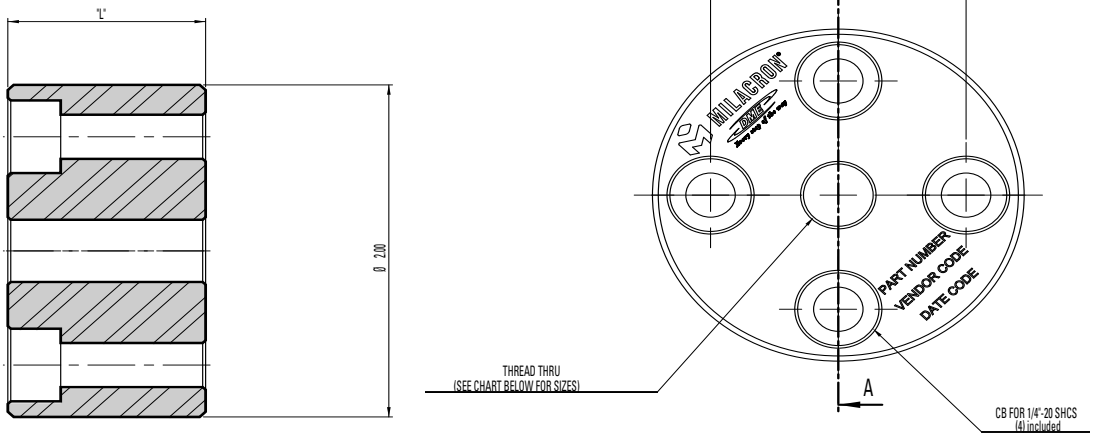

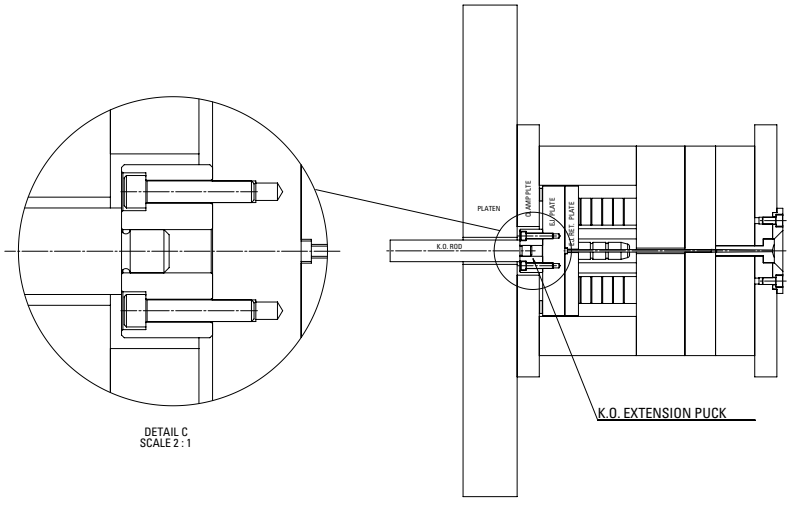

KNOCK OUT PUCKS

Knock Out Extension Pucks

Reversible K.O. Extension Puck

KO Extensions standardize mold ejector systems by unifying press knock out rod lengths. Wide range of thread configurations available for many different press types. The reversible puck can be mounted on either side to accommodate two different sizes of knock out rods.

ITEM NUMBER	THREAD 1 THRU	THREAD 2 H DEEP	H DIM	L DIM
BCPE103812	⅜"-16 UNC	½"-13 UNC	0.53	1.052
BCPE101258	½"-13 UNC	⅝"-11 UNC		
BCPE105834	⅝"-11 UNC	¾"-10 UNC		
BCPE103812	⅜"-10 UNC	½"-13 UNC	0.78	1.552
BCPE151258	½"-13 UNC	⅝"-11 UNC		
BCPE155834	⅝"-11 UNC	¾"-10 UNC		

(4) ¼"-20 SHCS included



Material:
Steel - 4140 or P20
Hardness - 28-32 HRc
Surface Treatment - Black Oxide

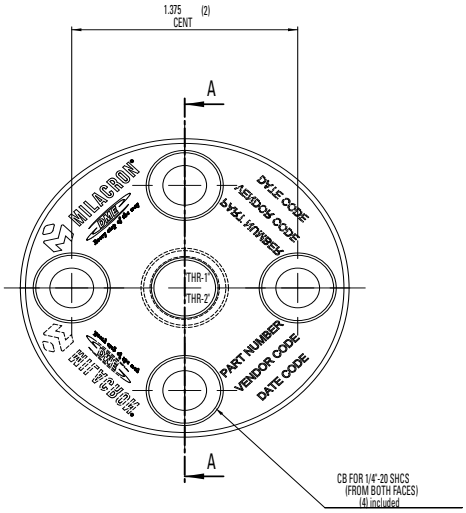

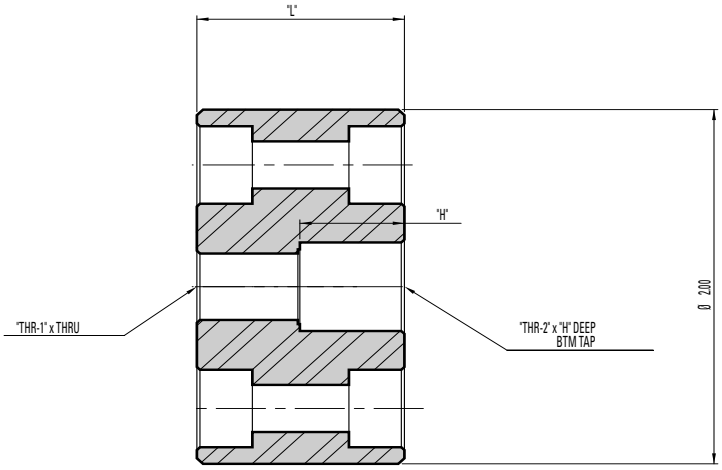

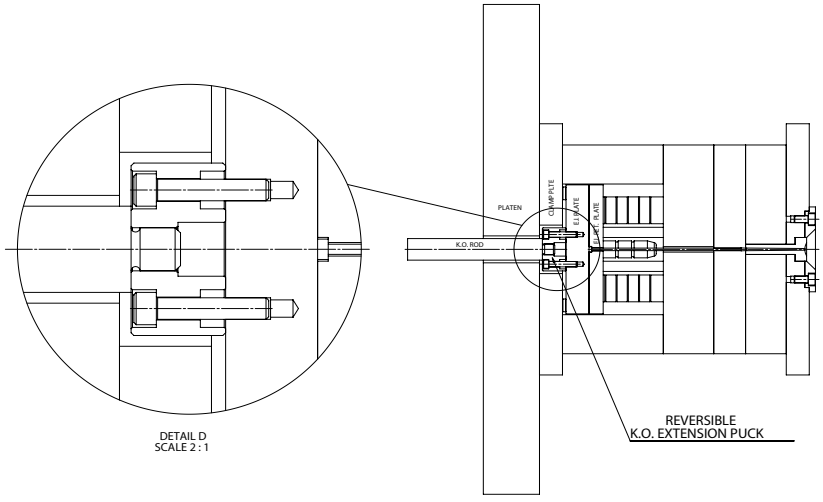

JIFFY LATCH-LOK™ ASSEMBLIES

Jiffy Latch-Lok™ Assemblies – General Information

A Simple, Easy-to-Install Device to Mechanically Float Plates

The DME Jiffy Latch-Lok™ provides new freedom in design to mechanically float plates. There is no need for electric switches, pneumatic controls or timing devices with delicate adjustments. The action of the Jiffy Latch-Lok is positive.

Once properly installed, the Latch-Lok eliminates the possibility of smashing the mold because there are no adjustments that can change, or connections that can be accidentally knocked off. The Jiffy Latch-Lok is available in sizes for regular or heavy-duty operation. It also comes in regular or 90° (right angle) designs to provide maximum installation flexibility.

A minimum of four assemblies required per mold. Large molds may require additional assemblies.

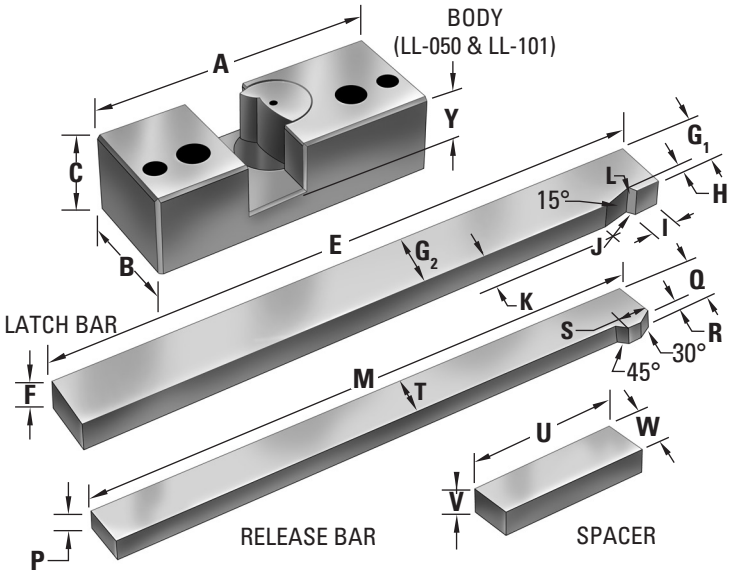

RECOMMENDED USAGE BASED ON MOLD BASE WIDTH	
≤ 10"	LL050
11" to 15"	LL101 or LL151
> 16"	LL201

U.S. Patent No. 3,706,116

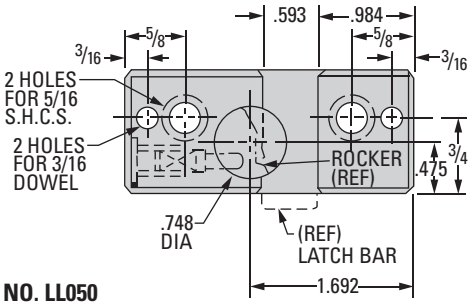

ITEM NO. LL050

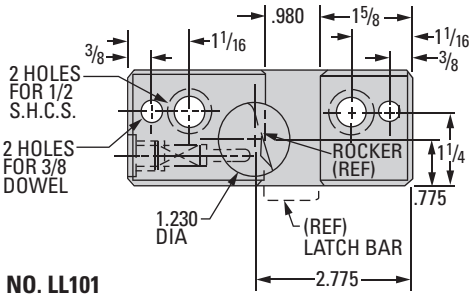

ITEM NO. LL101

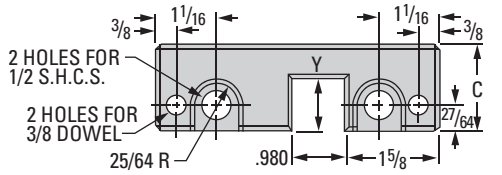

(RIGHT ANGLE-EJECTOR PLATE TYPE)
(SAME AS LL-101 EXCEPT MOUNTING HOLES ROTATED 90° AS SHOWN)

ITEM NO. LL151

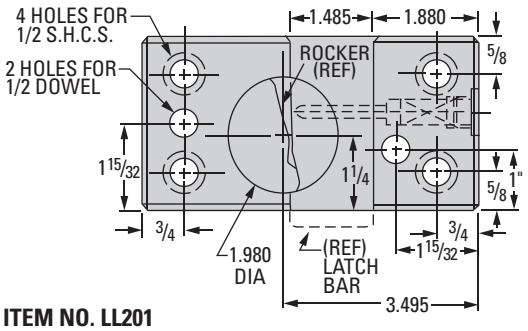

ITEM NO. LL201

Replacement parts are available.

ITEM NUMBER	BODY				LATCH BAR									RELEASE BAR						SPACER		
	A	B	C	Y	E	F	G1 NOM	G2 NOM	H	I NOM	J RAD	K	L RAD	M	P	Q	R NOM	S	T	U	V	W
LL050	3	1 3/16	15/16	.535	7	.285	.585	.590	.070	.30	.375	.103	.018	7	.230	.590	1/8	3/8	1/2	1 3/4	.295	1/2
LL101	5	1 15/16	1 7/16	7/8	10	.475	.967	.977	.115	1/2	.615	.170	.03	10	.355	.977	3/16	5/8	.825	3	.488	7/8
LL151																						
LL201	6	2 15/16	2 7/16	1 1/2	16	.975	1.465	1.475	.187	5/8	.989	.130	.04	16	.475	1.475	.275	7/8	1.255	4 1/2	.995	1 1/2

JIFFY LATCH-LOK™ ASSEMBLIES

Jiffy Latch-Lok™ Assemblies – Application Information

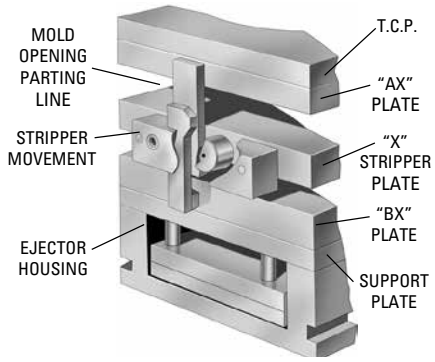

To Control Stripper Plate

Cycle time is often wasted waiting for the press knock-out bar to function. With the application of the DME Jiffy Latch-Lok, as illustrated to the left, the stripper plate is moved in a secondary action of the mold opening without the aid of the press knock-out bar.

The Jiffy Latch-Lok permits you to shorten the ejection stroke, improve cycle time and increase the number of parts per shift.

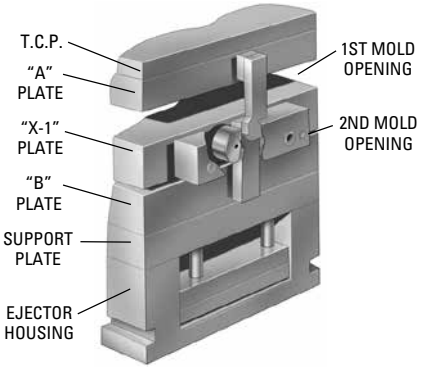

To Float "X-1" Plate Away from "A" Plate while Locking "X-1" and "B" Plates

In this application of the Jiffy Latch-Lok, the "X-1" plate is floated away from the "A" plate in the first mold opening sequence. At a predetermined opening (you determine the distance) the "X-1" plate is released from the "B" plate for the second mold opening. This application of the Jiffy Latch-Lok is particularly effective on "AX" or three-plate top runner molds.

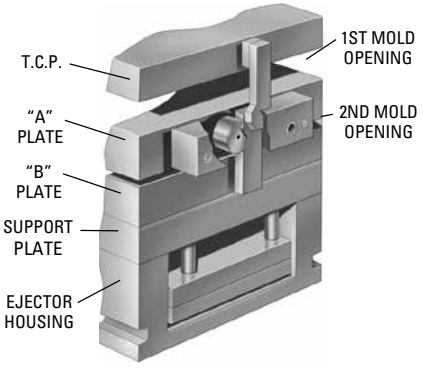

To Float "A" Plate Away from Top Clamp Plate while Locking "A" and "B" Plates

In the DME Latch-Lok application illustrated here, the "A" plate moves away from the top clamp plate in the first mold opening. During this portion of the cycle, the "A" and "B" plates are locked. As the release bar passes the rocker, the "A" and "B" plates part in the second mold opening.

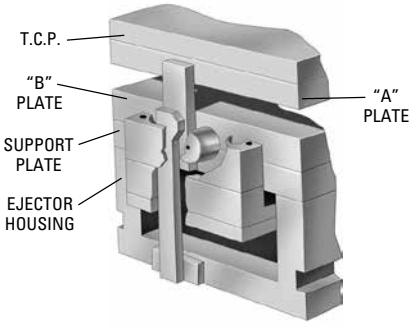

Actuation of Ejector Assembly Without Aid of Press Knock-Out Bar (LL151 only)

For those mold applications where a shorter press stroke is required, the DME Jiffy Latch-Lok is extremely effective.

You can activate the Jiffy Latch-Lok at any time after the mold begins to open, and pull the ejector assembly forward. This simple action shortens cycle time and increases part production.

Can also be used for "Reverse" Ejection from the Stationary Side of the Mold.

DME Jiffy Latch-Lok Replacement Parts

DESCRIPTION	FOR LATCH-LOK LL050 ITEM NUMBER	FOR LATCH-LOK LL101 ITEM NUMBER	FOR LATCH-LOK LL151 ITEM NUMBER	FOR LATCH-LOK LL201 ITEM NUMBER
ROCKER	LL052	LL102	LL102	LL202
LATCH BAR	LL053	LL103	LL103	LL203
RELEASE BAR	LL054	LL104	LL104	LL204

LATCH LOCKS

Latch Locks – General Information

KU: Latch Locks – Baffle Bars

KU11…

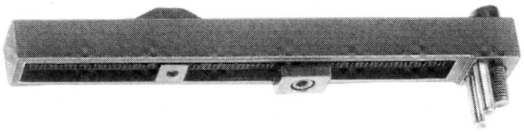

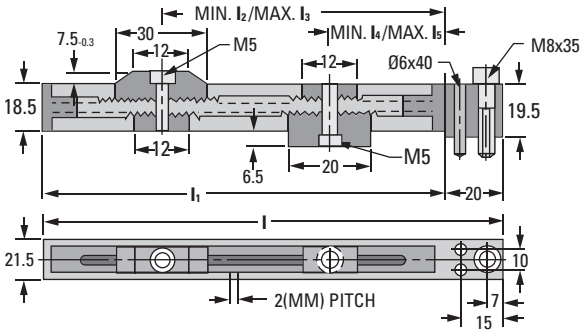

ITEM NUMBER	l_1	l_2	l_3	l_4	l_5
KU11140	120	20	100	20	104
KU11204	184	20	164	20	168
KU11254	234	20	214	20	218

KU12…
appropriate for KL11070
KL12…
KL13…

KU22…
appropriate for KL22256

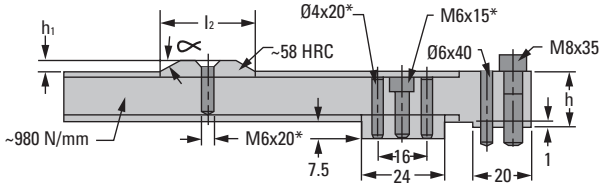

*Bore hole as per customer's requirements

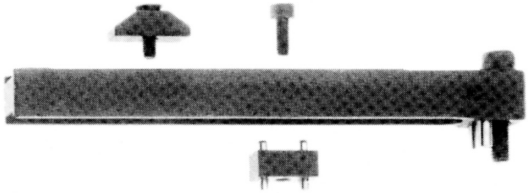

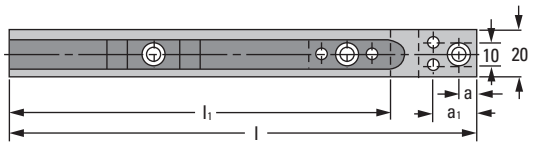

ITEM NUMBER	a	a_1	h	h_1	l_1	l_2	∝
KU12200	7	15	20	7	170	30	35
KU12250	7	15	20	7	220	30	35
KU12300	7	15	20	7	270	30	35
KU22400	10	19.5	30	8	360	50	40

SPARE PARTS FOR:	KF: SPRINGS	KK: HEADS	KV: WEARING BARS
		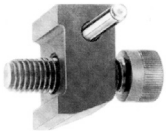	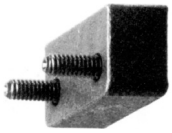
ITEM NUMBER	ITEM NUMBER	ITEM NUMBER	ITEM NUMBER
KL11070	KF12070090170	KK11012	KV11022
KL12090	KF12070090170	KK11012	KV11022
KL12170	KF12070090170	KK11012	KV11022
KL12220	KF12220270	KK11012	KV11022
KL12270	KF12220270	KK11012	KV11022
KL13110	WZ8030 M1	—	KV11022
KL13170	WZ8030 M1	—	KV11022
KL13220	WZ8030 M1	—	KV11022
KL22256	KF22256	KK22	KV11022

LATCH LOCKS

Latch Locks – Typical Application

Latch Locks – KL

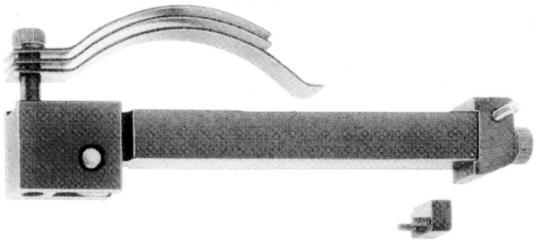

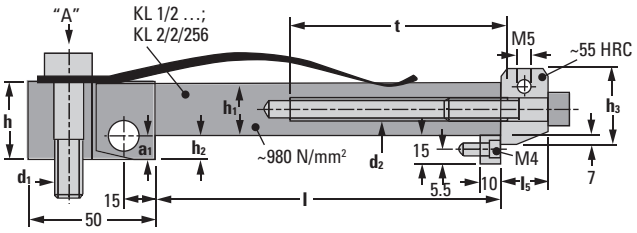

Typical Application

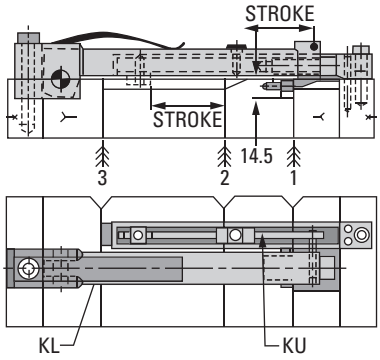

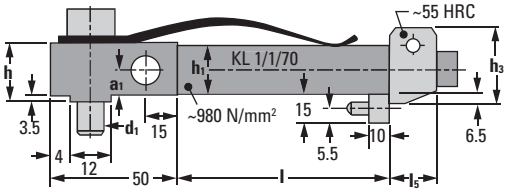

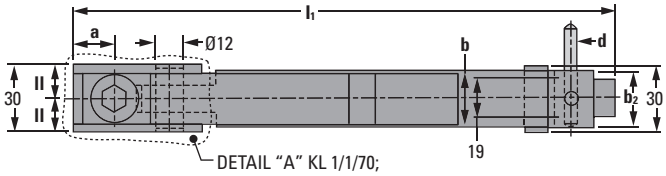

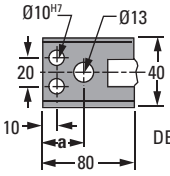

DETAIL "A" KL 1/1/70;
KL 1/2/…

DETAIL "A" KL 2/2/256

Combinations

KL/1/1 — KU/1/1
KL/1/2 — KU/1/2
KLI/1/3 — KU/1/2

KL/2/2 — KU/2/2

ITEM NUMBER	a	a_1	b	b_2	d	d_1	d_2	h	h_1	h_2	h_3	l_1	l_5	t	Fmax daN
KL11070	10	15	25	27	6	M10	M12	31.5	23.5	15	37.5	152	20	45	6000
KL12090	10	15	25	27	6	M10	M12	42.0	23.5	15	37.5	172	20	80	6000
KL12170	10	15	25	27	6	M10	M12	42.0	23.5	15	37.5	252	20	80	6000
KL12220	10	15	25	27	6	M10	M12	42.0	23.5	15	37.5	302	20	80	6000
KL12270	10	15	25	27	6	M10	M12	42.0	23.5	15	37.5	352	20	80	6000
KL22256	30	14	30	30	12	M12	M16	56.0	40.0	16	55.0	379	27	80	11000

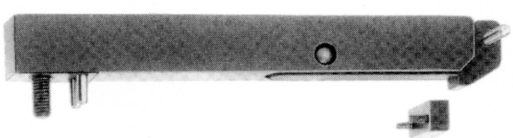

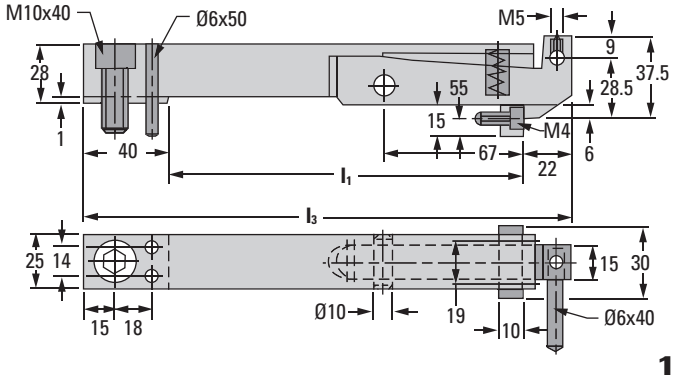

ITEM NUMBER	l_3
KL13120	182
KL13170	232
KL13220	282

DME CYCLE COUNTER

R-Series

General Description

The DME Cycle Counter R-Series accurately monitors mold operation, validates process monitoring data, and assists mold maintenance procedures. With a maximum operating temperature of 250°F (121°C), this precise unit has a non-resettable, mechanical, 7-digit counter and a glass-filled nylon housing for rugged durability.

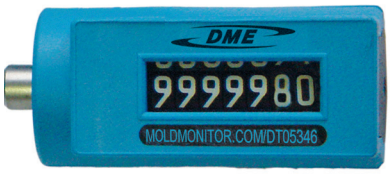

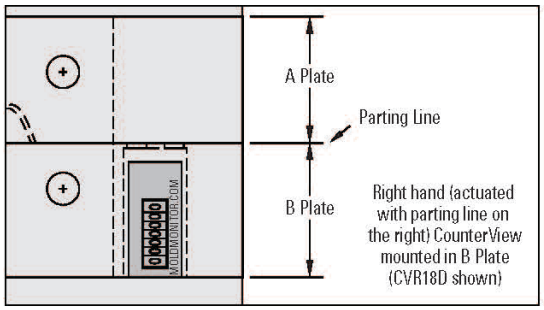

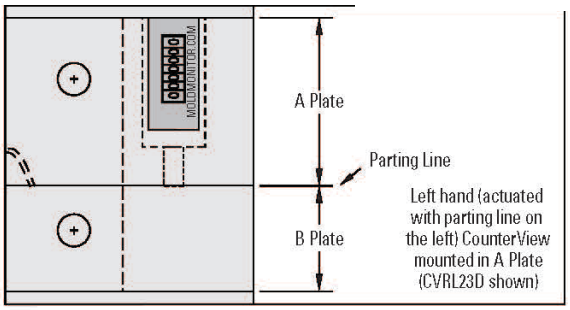

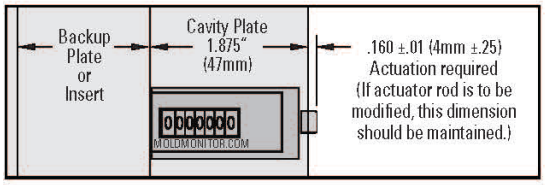

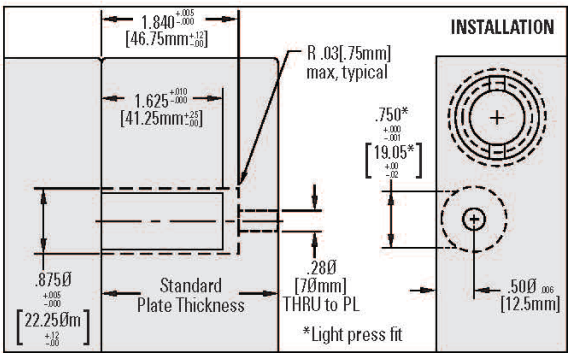

The R-Series can be installed in the A or B plates with a minimum thickness of 1.875" (47mm). Larger plates utilize a threaded rod (included with each) that is pre-machined to the appropriate length for standard plate thicknesses to provide consistent actuation.

Parting Line at Left

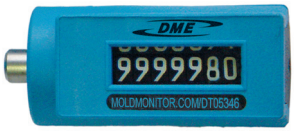

Each R-Series Counter includes the actuator. All except CVR18D and CVRL18D require attachment of the actuator rod to the threaded unit.

Parting Line at Right



INCH Standard

ITEM NUMBER	NOMINAL PLATE THICKNESS
CVRL18D	1.875
CVRL23D	2.375
CVRL28D	2.875
CVRL33D	3.375
CVRL38D	3.875
CVRL43D	4.375
CVRL83D	8.375

METRIC Standard

ITEM NUMBER	NOMINAL PLATE THICKNESS
CVRL56D	56
CVRL66D	66
CVRL76D	76
CVRL96D	96

INCH Standard

ITEM NUMBER	NOMINAL PLATE THICKNESS
CVR18D	1.875
CVR23D	2.375
CVR28D	2.875
CVR33D	3.375
CVR38D	3.875
CVR43D	4.375
CVR83D	8.375

METRIC Standard

ITEM NUMBER	NOMINAL PLATE THICKNESS
CVR56D	56
CVR66D	66
CVR76D	76
CVR96D	96

DME Cycle Counter Replacement Actuator Rods

INCH Standard

ITEM NUMBER	ROUND CV ROD LENGTH
RCV23	0.5"
RCV28	1.0"
RCV33	1.5"
RCV38	2.0"
RCV43	2.5"
RCV83	6.5"

METRIC Standard

ITEM NUMBER	ROUND CV ROD LENGTH
RCV56	8.38mm
RCV66	18.39mm
RCV76	28.37mm
RCV96	48.38mm

DME CYCLE COUNTER

CCPL300/CCEM300 Series

General Description

The DME Cycle Counter accurately monitors mold operation, validates process monitoring data, and assists mold maintenance procedures. With a maximum operating temperature of 320°F (160°C), this precise device uses a non-resettable, mechanical, 7-digit counter to record the number of times a mold closes. Easily mountable to accommodate changeovers for different mold insert heights, the unit's counting mechanism relies on a sensor that detects when the mold has closed. Each mold cycle triggers the counting mechanism to increase the count on the display.



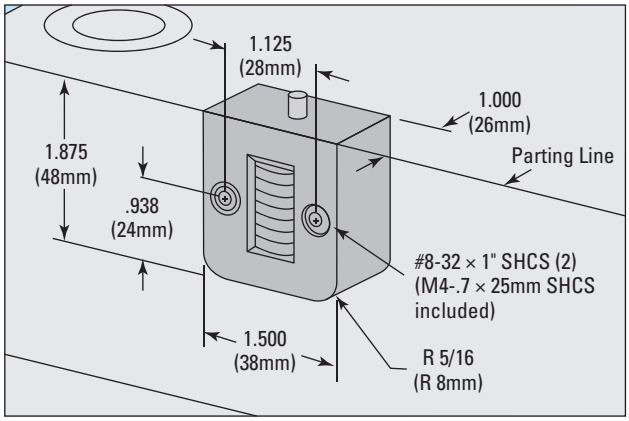

PARTING LINE MOUNT	
Parting line mount makes unit easily visible.	
CCPL300	INCH / METRIC Standard

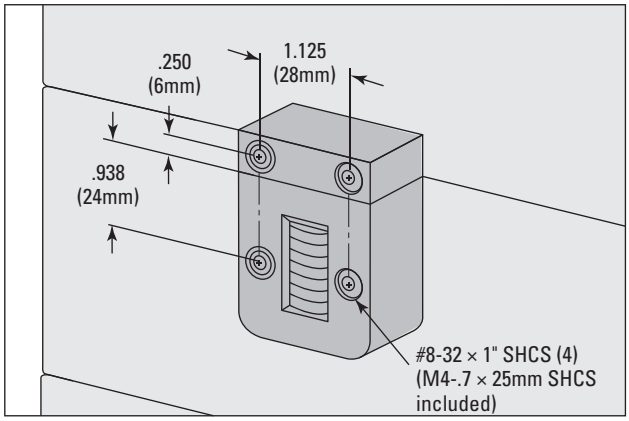

EXTERNAL MOUNT	
Pocket machining not necessary. Designed specifically for retrofit applications.	
CCEM300	INCH / METRIC Standard

Benefits

- Positively monitors mold activity
- Confirms process monitoring data
- Maximizes mold maintenance procedures
- Glass-filled nylon housing for rugged durability

COUNTERVIEW® MOLD COUNTER

CVe Monitor®

General Description

Expanding beyond the capabilities of the R-Series and 100/200 Series, the new CVe Monitor v2 tracks mold activity, allowing users to view the data on the display or from comprehensive reports using OnDemand software or the new CVe System.



Benefits

- 7-digit LCD display with a push button to move through the display modes
- 4GB flash drive for file storage and 4+ year battery life
- Water resistant with an ingress protection rating of IP52
- Maximum temperature: 190° F (90° C)
- Dimensional compatibility with mechanical Counterviews.

Mounting Options

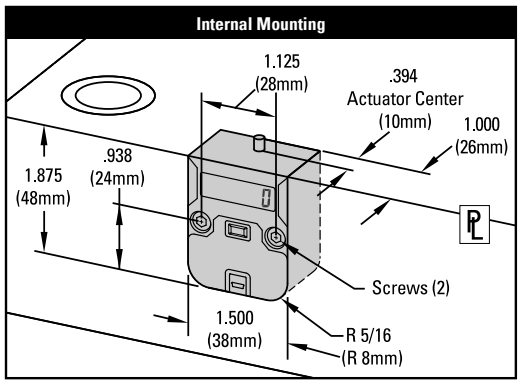

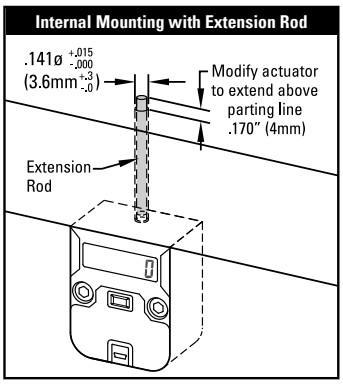

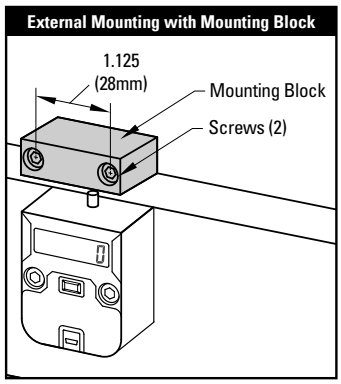

How to order:

- For installation below parting line (i.e. rails as shown in center drawing above), order (1) CVENTID or CVENTMD
- For installation outside of the mold (right drawing) order (1) CVEMBID or CVEMBMD

ITEM NUMBER	DESCRIPTION	MOUNTING STYLE	SCREWS (2)
CVEPLID	CVe Inch	Parting Line	#8-32 x 1" SHCS
CVEPLMD	CVe Metric	Parting Line	M4 x 25mm SHCS
CVENTID	CVe Inch (with 8"rod)	Extension (Includes 8" rod)	#8-32 x 1" SHCS
CVENTMD	CVe Metric (with 203mm rod)	Extension (Includes 203mm rod)	M4 x 25mm SHCS
CVEMBID	CVe Inch (with Mounting Block)	Parting Line	#8-32 x 1" SHCS
CVEMBMD	CVe Metric (with Mounting Block)	Parting Line	M4 x 25mm SHCS

REPLACEMENT PARTS	
ITEM NUMBER	DESCRIPTION
CVEINT	Internal Extension Rod (8"/203mm) including a hex key for CVe Monitor set screw removal
CVEXT	External Mounting Block including #8-32 x 1" SHCS (2)
CVEXT2	External Mounting Block including M4x25mm SHCS (2)

OEM-specific CVe Monitors are available with additional features. Contact DME for more information.

On-Mold Display Modes

Each device is provided at -25 cycles to allow for mold setup and initialization of the CVe Monitor. Once it reaches zero, all timers and data will reset on the monitor. During production, users can press the button on the front of the monitor and review the following information on the display:



Cycle Count
Total cycles for the life of the mold is presented on the main screen of the CVe Monitor.



Cycle Time
Since the first production cycle, the cycle time is shown in seconds for the life of the mold.



Cycle Time - Recent
Cycle time for the past 25,000 cycles.



Users can utilize the 4GB flash drive on the CVe Monitor by connecting the device to a PC using an industry-standard mini USB cable (see next page). Users press the button to get to the flash drive mode and then the storage area is represented on the PC by a new drive letter.



Efficiency Percentage
The percentage of time that the mold has been actively cycling vs being idle.



Efficiency Percentage - Recent
The percentage of time the mold has been active in the past 25,000 cycles.



Cycle Count Reset
A separate counter that can be reset to zero for interim monitoring of cycles when pressed and held.

CVe Monitor is a registered trademark of AST Technology. Patents granted and pending for AST Technology.

COUNTERVIEW® MOLD COUNTER

CVe Monitor®

Alert Mode

Once data is initialized using the OnDemand software, users will be alerted to different modes on the device:

Preventive Maintenance

During initialization, the initial preventive maintenance point and the PM interval is entered and saved onto the CVe Monitor. Then, when the PM is within 10% of the initial point, the display will flash "PM Due" as shown at right. Users can then 'snooze' the alert by holding for 2 seconds, returning it to Total Cycles.



When a PM is performed using OnDemand software and noted as such, the date/time will be written to the CVe Monitor and then the alert is stopped until reaching 10% of the next PM point. If no PM is performed, the CVe Monitor will continue to alert the user until snoozed or the PM is ultimately recorded.

Low Battery

The CVe Monitor has a battery life of approximately 4.5 years in typical molding environments where temperatures are controlled. When the battery is within 6 months of its expected end of life, the display will flash as shown at right. Users can then 'snooze' the alert by holding for 2 seconds, returning it to the Total Cycles. The alert will appear every 30 days as a reminder to transfer the stored data to a new CVe Monitor.



Retrofitting and Removal

Users can view additional data by double-clicking the button on the monitor:

Retrofit CVe for CounterView Tools

During initialization, users can start the cycle count with the tool's actual cycle count from an existing CounterView or known cycles from maintenance records. Once entered, the user can see the total cycles for the tool, which includes the count of the cycles from the counter and those run with the CVe Monitor. In the screen at right, the tool had 1,000,000 cycles on it originally, but ran 507,288 cycles after the CVe Monitor was installed.



Removal Monitoring

When the CVe Monitor is removed from the tool for any reason (i.e. cleaning) the pins on the back of the device will record an event of its removal. After viewing the retrofit number above, the display will move into the screen shown at right, designating the number of times the monitor was removed from the mold.





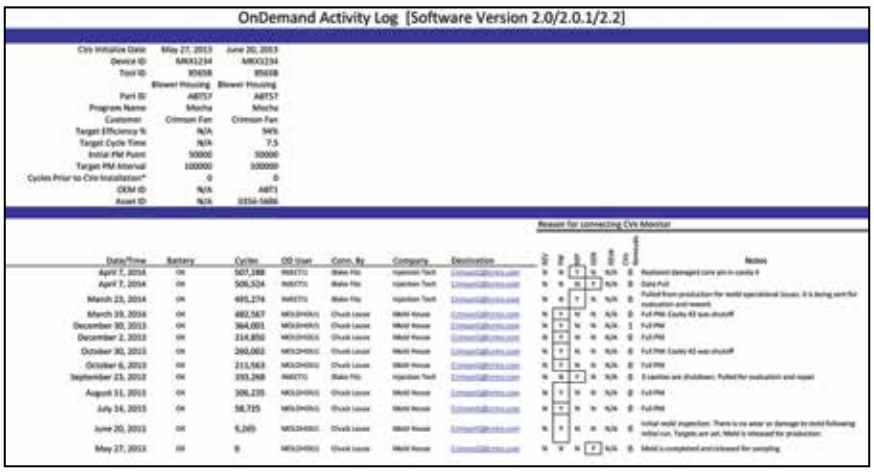

Above: OnDemand software allows users to view data and keep a record of reports run, outlining the reason for the report generation including PM, general queries, revision changes, and repairs. Notes can be included and OnDemand records the person generating the document for accurate history.

CVe Monitor is a registered trademark of AST Technology. Patents granted and pending for AST Technology.

New Sm
Product In
Coming

artMold

nformation

g Soon

FasTie®

Quick Ejector Tie-In System

Description & Use

In an injection molding press, the FasTie® system quickly "ties-in" the mold ejector plate to the press ejection system, dramatically reducing mold change time. The greatest time savings are realized in presses where space is limited and the ejector system is difficult to tie in using solid knockout bars.

The FasTie® coupler may be permanently mounted to the press ejector plate. The quick-connect locking mechanism in the coupler snaps mechanically onto the mold-mounted pull stud during mold installation.

To release the knockouts, apply shop air to the coupler. The coupler opens to release the pull stud, disconnecting the press and tooling ejector plates. The coupler remains in the open position, ready for a new mold to be set.

For multiple knockout locations, an air manifold is recommended to release all couplers simultaneously. See the following catalog pages for installation examples.

The FasTie® couplers and pull studs are available in 4 sizes to suit various press sizes: 1", 1-3⁄8" 2"and 3". Mounting accessories such as center adapters and knockout bars are available to facilitate installation without additional machining to presses or injection molds

Features & Benefits:

- FasTie® installs easily into existing tapped holes; no additional machining is required
- FasTie® reduces mold setting time by quickly uncoupling, plus there are no loose parts to stow
- FasTie® remains coupled during mold cycling for increased "tie-in" reliability and reduced wear
- SpeedBar® adjusts quickly without tools to the exact length required [±1⁄2" (12.7 mm) from nominal in .006" (.15 mm) increments]*
- SpeedBar® relieves molders from the time and trouble of machining ejector bars to fit different molds*

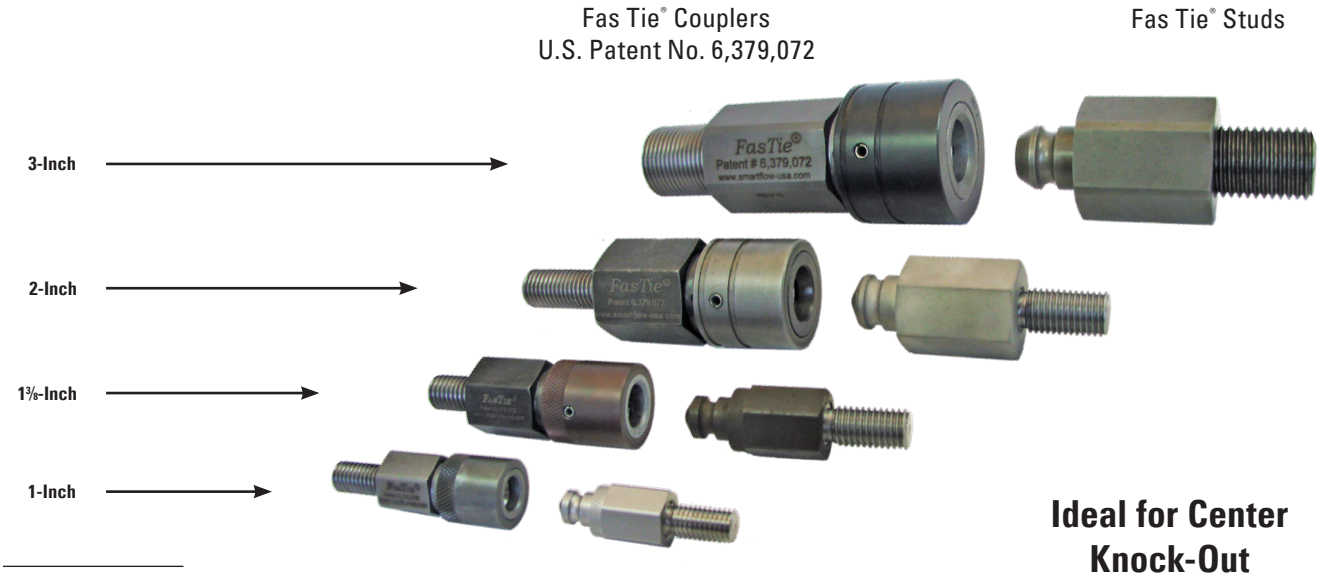

Ideal for Center Knock-Out

* 1-inch only

FasTie®

Quick Ejector Tie-In System Installation Examples

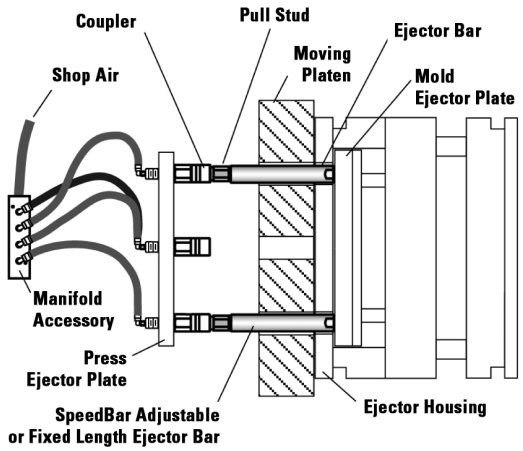

This setup is designed for custom molders who use a variety of injection molds with different knockout patterns and storkes.

Typical Application - Couplers on Press Ejector Plate

Couplers are installed on the press ejector plate. Pull studs are placed at the end of the mold-mounted knockout bars for easy removal. Molds are changed quickly without accessing the back of the press knockout plate. For example, a press with 4 ejector positions may be running molds using only the horizontal positions, but the next mold may need the 2 vertical ejector positions. Ejector housing shown is 1.062" thick. Air manifold supplies air to each coupler for simultaneous coupler release.

Parts List

Qty	Part
2 or 4	FasTie Pull Stud
2 or 4	FasTie Coupler
2 or 4	Fixed Length Ejector Bars or SpeedBar® Adjustable Length Bars
1	Air Manifold with tubing

Animated Installation Examples appear on YouTube search for "burgerandbrowneng" or scan QR code

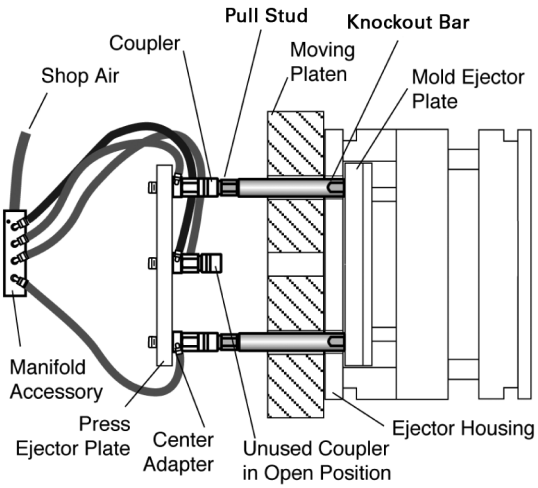

This setup is used where there is limited access to the back of the Press Ejector Plate. Custom molders using smaller presses will benefit from this application.

Alternate Application - Couplers and Center Adapters on Press Ejector Plate

Couplers are installed next to the press ejector plate. Pull studs are placed at the end of the mold-mounted knockout bars for easy removal. Molds are changed quickly without accessing the back of the press ejector plate.

For example, a press with 4 knockout positions may be running molds using only the horizontal positions, but the next mold may need the 2 vertical knockout positions. Ejector housing shown is 1.062" thick. Air manifold supplies air to the mold side of the press ejector plate with the use of adapters.

Parts List

Qty	Part
2 or 4	FasTie Pull Stud
2 or 4	FasTie Coupler
2 or 4	Center Adapters
2 or 4	Fixed Length Ejector Bars or SpeedBar® Adjustable Length Bars
1	Air Manifold with tubing

FasTie®

Quick Ejector Tie-In System Installation Examples

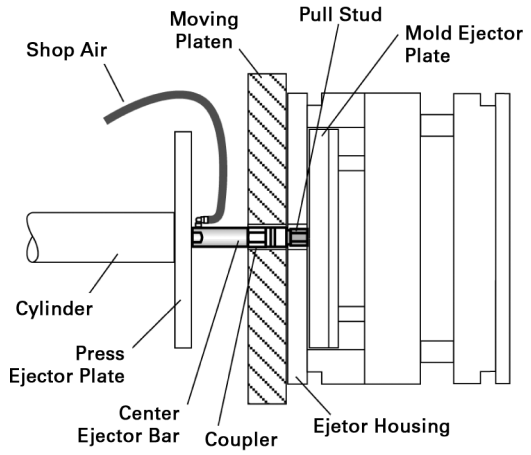

For small presses with a center knockout, replace the cylinder bolt with a Center Knockout Bar and FasTie coupler.

Center Knockout Application - Coupler in Center Ejector Position

Center Bar and Coupler are installed into the press ejector plate. The pull stud is installed in the mold ejector plate. Molds are changed quickly without accessing the back of the press ejector plate. Ejector housing shown is 1.062" thick. Shop air is supplied to the side of the center adapter. No air manifold is needed. Fully-threaded Center Bar may be shortened to proper length on-site. In many small machines, there may not be room for an ejector bar.

Parts List

Qty	Part
1	FasTie Pull Stud
1	FasTie Coupler
1	Center Adapters

High Strength Couplers and Studs are recommended for 1" applications.

Animated Installation Examples appear on YouTube search for "burgerandbrowneng" or scan QR code

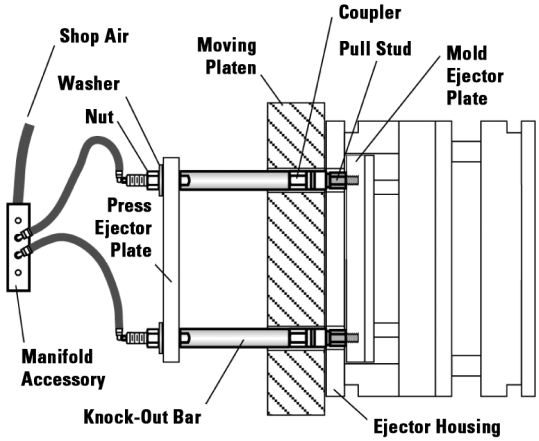

This setup is designed for captive molders, or shops with tools using a standard thickness ejector housing.

Captive Molder Applications - Couplers at the End of Ejector Bars

Couplers are located at the end of the knockout bars mounted to the press ejector plate. Pull studs are mounted to each mold in storage. Ejector connection is made without changing knockout bars. Ejector housing shown is 1.062" thick. Air manifold supplies compressed air to the end of each knockout bar for simultaneous coupler release. Fixed length bars are finished on-site, cut to length and tapped with ½-13 female thread.

Smartflow Blank Bars (fixed length) are threaded one end only to be cut to length and threaded on site.

SpeedBar Adjustable Length Bars may be manipulated without tools +/- .5" from nominal in increments of .006".

Parts List

Qty	Part
2 or 4	FasTie Pull Stud
2 or 4	FasTie Coupler
2 or 4	Fixed Length Ejector Bars or SpeedBar® Adjustable Length Bars
1	Air Manifold with tubing

FasTie®

Quick Ejector Tie-In System Installation Examples

Specifications

Maximum operating temp ..... 300°F (149°C)
Air pressure range ..... 80–100 psi
Pull stud material ..... Hardened Steel (58–62 Rc)
Knockout bar and coupler material ..... High Strength Steel
Threaded studs ..... B7 Alloy or Comparable
Air manifold material ..... Aluminum
Air tubing material ..... ⅛"OD Nylon

Press Requirements

	COUPLER SIZE			
	1-inch	1-⅜-inch	2-inch	3-inch
Platen thru hole min.	Ø1.063"	Ø1.45"	Ø2.063"	Ø3.063"
	Ø27 mm	Ø36.8 mm	Ø52.4 mm	Ø77.8mm
Ejector plate thru hole min.	Ø0.512"	Ø0.641"	Ø0.765"	Ø1.015"
	Ø14 mm	Ø16.5 mm	Ø19.4 mm	Ø25.8mm
Ejector force per coupler max.	2.5 tons	5.5 tons	7.5 tons	15 tons

Recommended FasTie Size Per Press Size & Knockout Qty

	KNOCKOUT QUANTITY		
Press Tonnage	1 (Center)	2	4
0–250	1"HS	1"HS	1"HS
250–500	1-⅜"	1"HS or 1-⅜"	1"HS or 1-⅜"
500–750	2"	1-⅜" or 2"	1-⅜" or 2"
750–1000	2"	1-⅜" or 2"	1-⅜" or 2"
1000+	Do not use	2"or 3"	2" or 3"

For best results, use the largest FasTie that will fit into the press.

SpeedBar
U.S. Patent No. 6,315,544



Fixed Length Ejector Bar



Center Ejector Bar



Center Adapter

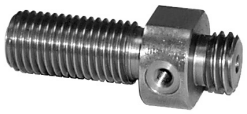

Air Manifold

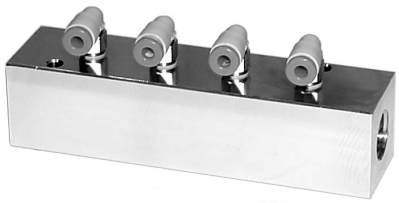

Accessories

Additional parts to aid installation and use:

- **Finished Bar Fixed Length Knockout** is a secure extension for a FasTie Pull Stud attached to the ejector plate in a Typical Application. Finished Bars are ordered to your specific length and thread size for seamless installation.
- **Blank Bar Fixed Length Knockout** provides an air passage for FasTie Coupler operation at the back of the press ejector plate in Captive Applications. Several lengths are stocked with one blank end for finishing (cut to length and thread).
- **SPEEDBAR Adjustable Length Knockout Bar*** changes length without tools ±1/2" in increments of .006". Air passes through the bar for air hook-up at the back of the press ejector plate, in Captive Applications.
- **Center Knockout Bar and Center Adapter** Provides an air passage in front of the press ejector plate for center knockout or alternate applications. Also for use with multiple knockouts.
- **Air Manifold** Splits single air supply into four circuits for simultaneous release of multiple FasTie Couplers. 1/8" diameter tubing and pneumatic connectors are included.

Contact DME for special thread sizes for Ejector Bars and Center Adapters

* 1-inch, 1/2-13 threaded only

FasTie®

Quick Ejector Tie-In System - 1-inch Couplers and Pull Studs

FasTie Coupler Design employs three locking lugs, to dramatically increase the load-bearing surface area of the components.

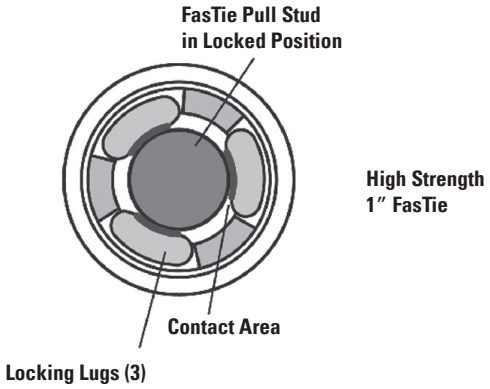

High Strength FasTie Couplers and Pull Studs

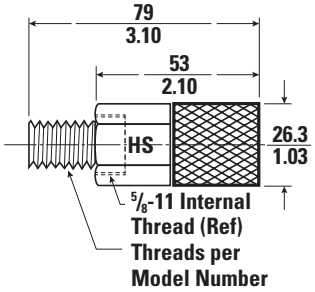

High Strength Coupler

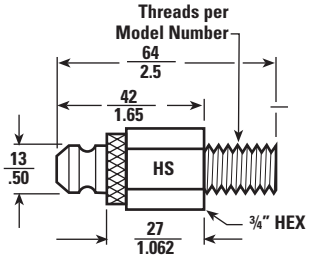

High Strength Pull Stud

ITEM NUMBER	THREAD SIZE
FTFHS50	½-13
FTFHS63X	⅝-11(F)
FTFHS63	⅝-11
FTFHSM12	M12 × 1.75
FTFHSM16	M16 × 2
FTFHSM20	M20 x 2.5

ITEM NUMBER	THREAD SIZE
FTMHS38	⅜-16
FTMHS50	½-13
FTMHS63	⅝-11
FTMHSM12	M12 × 1.75
FTMHSM16	M16 × 2
FTMHSM20	M20 × 2.5

NOTE: Do not use HS FasTie Couplers in combination with standard version (above). Damage to couplers will result. Maximum installed center line misalignment of coupler and pull stud is +/- 3.5mm/0.138"

Finished Bar Fixed Length Knockout (Typical Applications) threaded both ends, cut to length

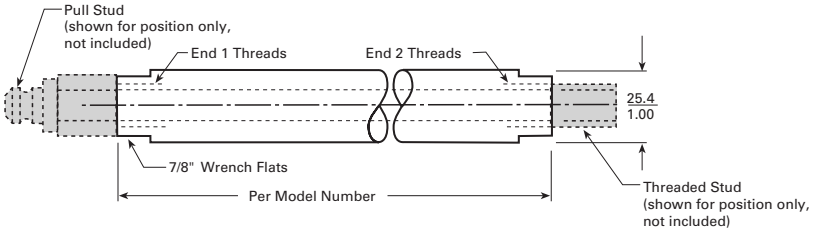

ITEM NUMBER (Special order x.xxx = length in inches)	END 1 THREAD SIZE	END 2 THREAD SIZE
FTFL-50-50-X.XXX	1/2-13	1/2-13
FTFL-50-63-X.XXX	1/2-13	5/8-11
FTFL-63-63-X.XXX	5/8-11	5/8-11
FTFL-M16-M16-X.XXX	M16 x 2	M16 x 2

FasTie®

Quick Ejector Tie-In System - 1-inch Accessories

Blank Bar Fixed Length Knockout (Alternate Applications ½-13 threads

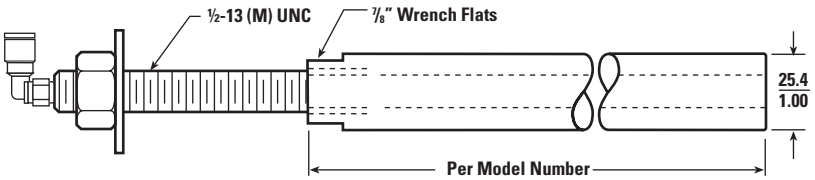

ITEM NUMBER	LENGTH
FTBB50-8	8"
FTBB50-10	10"
FTBB50-12	12"
FTBB50-14	14"

SPEEDBAR Adjustable Length Knockout ½-13 threads

Adjusts +/- 1/2" from base height

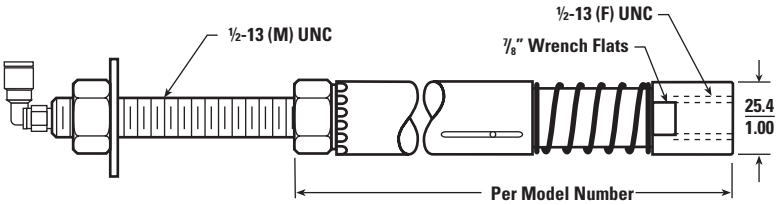

ITEM NUMBER	LENGTH
SBAB50-6	6"
SBAB50-7	7"
SBAB50-8	8"
SBAB50-9	9"
SBAB50-10	10"
SBAB50-11	11"
SBAB50-12	12"
SBAB50-13	13"
SBAB50-14	14"

Center Adapter

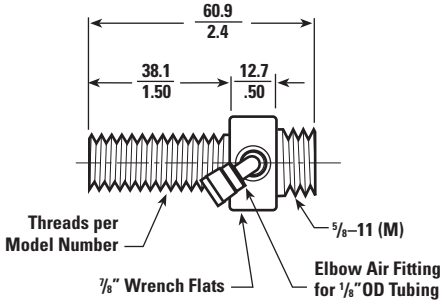

ITEM NUMBER	THREAD SIZE
FTCA50	½-13"
FTCA63	⅝-11"
FTCAM12	M12 × 1.75
FTCAM16	M16 × 2
FTCAM20	M20 × 2.5

Center Bar (use with FTFHS-63 only)

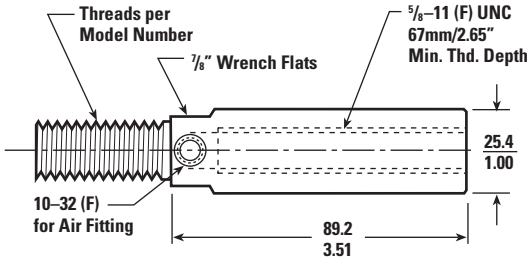

ITEM NUMBER	THREAD SIZE
FTCA63-63	⅝-11
FTCAM16-63	M16 × 2

Call DME for a quote on thread sizes not shown

Air Manifold (applies to all sizes)

FTAM100 Air Manifold Assembly includes:	
FTPF2	Pneumatic Fitting 90° Elbow, 10–32 × ⅛" OD tube
FTT125	Tubing ⅛"OD, nylon

Linear = $\frac{\text{mm}}{\text{inch}}$ (TYP)

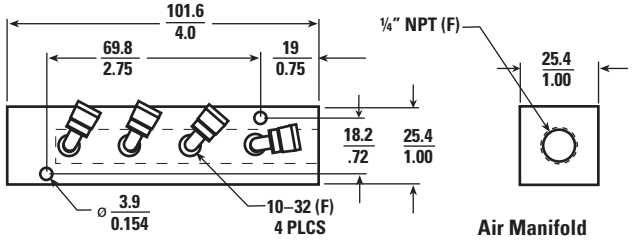

FasTie®

Quick Ejector Tie-In System - 1-3/8 & 2-inch Couplers and Pull Studs

FasTie 1-3/8-Inch Components

Couplers

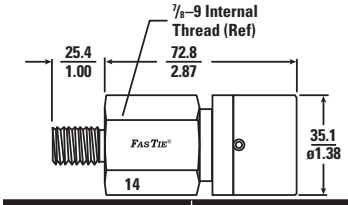

ITEM NUMBER	THREAD SIZE
FTF1.4-50	½-13
FTF1.4-63	⅝-11
FTF1.4-75	¾-10
FTF1.4-88X	7/8-9(F)
FTF1.4-M16	M16 × 2
FTF1.4-M20	M20 × 2.5

Pull Studs

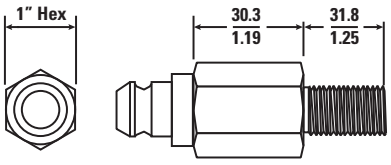

ITEM NUMBER	THREAD SIZE
FTM1.4-50	½-13
FTM1.4-63	⅝-11
FTM1.4-75	¾-10
FTM1.4-M16	M16 × 2
FTM1.4-M20	M20 × 2.5

Center Adapters

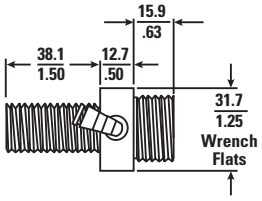

ITEM NUMBER	THREAD SIZE
FTCA1.4-75	¾-10
FTCA1.4-M16	M16 × 2
FTCA1.4-M20	M20 × 2.5

Maximun installed center line misalignment of coupler and pull stud is +/-5mm (0.197")

Finished Bar Fixed Length Knockout (Typical Applications) threaded both ends, cut to length

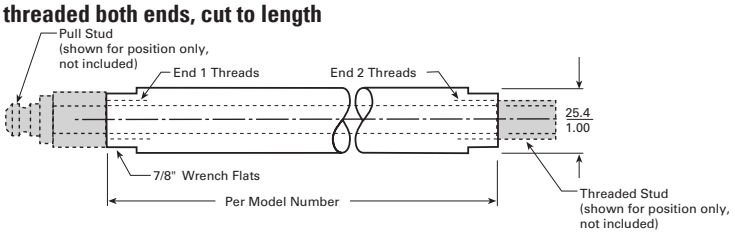

ITEM NUMBER (Special order x.xxx = length in inches)	END 1 THREAD SIZE	END 2 THREAD SIZE
FTFL-50-50-X.XXX	1/2-13	1/2-13
FTFL-50-63-X.XXX	1/2-13	5/8-11
FTFL-63-63-X.XXX	5/8-11	5/8-11
FTFL-M16-M16-X.XXX	M16 x 2	M16 x 2

FasTie 2-Inch Components

Couplers

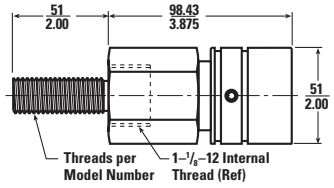

ITEM NUMBER	THREAD SIZE
FTF2-63	⅝-11
FTF2-75	¾-10
FTF2-113X	1-1/8-12 (F)
FTF2-M16	M16 × 2
FTF2-M20	M20 × 2.5

Pull Studs

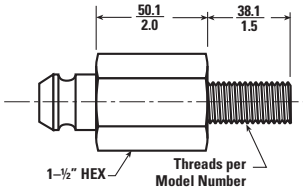

ITEM NUMBER	THREAD SIZE
FTM2-63	⅝-11
FTM2-75	¾-10
FTM2M16	M16 × 2
FTM2M20	M20 × 2.5

Center Adapters

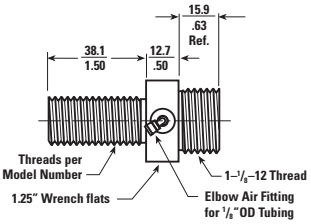

ITEM NUMBER	THREAD SIZE
FTCA2-75	¾-10
FTCA2M16	M16 × 2
FTCA2M20	M20 × 2.5

Maximum installed center line misalignment of coupler and pull stud is +/- 6mm/0.236"

Finished Bar Fixed Length Knockout (Typical Applications) threaded both ends, cut to length

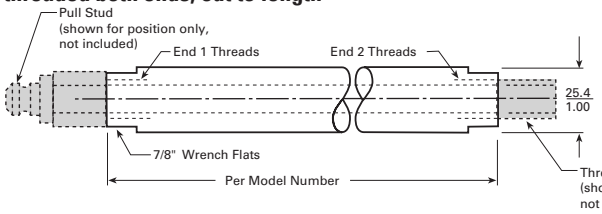

ITEM NUMBER (Spl order x.xxx = length in inches)	END 1 THRD SIZE	END 2 THD SIZE
FTFL2-63-63-X.XXX	5/8-11	5/8-11
FTFL2-63-75-X.XXX	5/8-11	3/4-10
FTFL2-75-75-X.XXX	3/4-10	3/4-10
FTFL2-M16-M16-X.XXX	M16 x 2	M16 x 2
FTFL2-M16-M20-X.XXX	M16 x 20	M20 x 2.5
FTFL2-M16-M20-X.XXX	M20 x 2.5	M20 x 2.5

Ejector Bars for 1-3/8-inch and 2-inch FasTie's are special orders. Contact DME Industrial Supplies for information.

FasTie®

Quick Ejector Tie-In System

FasTie 3 Inch Coplers & Pull Studs

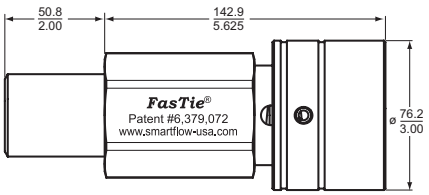

ITEM NUMBER	THREAD SIZE
FTF3-M42	M42 x3
FTF3-M42X	M42 x 3(F)

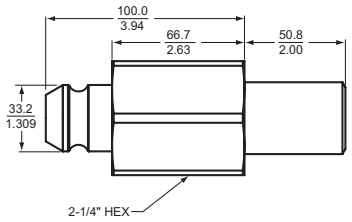

ITEM NUMBER	THREAD SIZE
FTM3-M36	M36 x 4
FTM3-M36X	M36 x 4(F)

Maximun installed center line misalignment of coupler and pull stud is +/-5mm (0.197")

Determine Knockout Bar Length

- Determine length of Solid Knockout Bar
- Select Connected FasTie length from table
- Subtract Connected FasTie length from Solid Knock Bar length
- Subtract Center Adapter length if necessary
- Result is FasTie Knockout Bar length

Connected FasTie Lengths		
DESCRIPTION	ITEM NUMBERS	"X" LENGTH
Standard 1" FasTie	FTF-xx and FTM-xx	3.062"/77.8mm
High Strength1" FasTie	FTFHS-xx and FTMHS-xx	3.162"/80.3mm
1⅜" FasTie	FTF14-xx and FTM 14-xx	4.300"/109.2mm
2" FasTie	FTF2-xx and FTM2-xx	5.875"/149.2mm
3" FasTie	FTF3-xx and FTM3-xx	8.250"/209.6mm

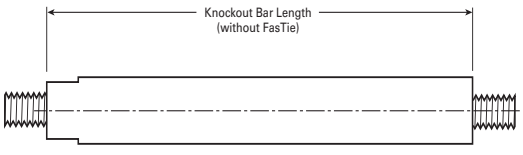

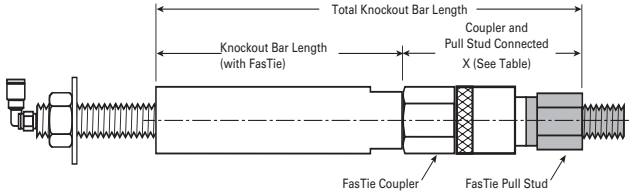

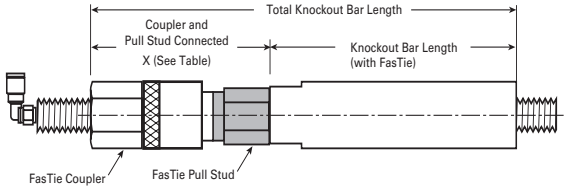

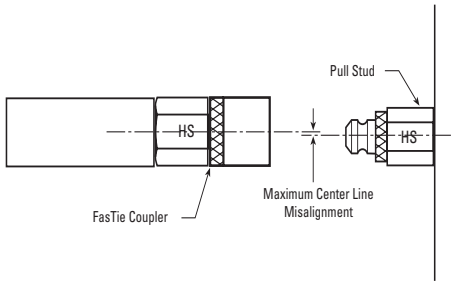

Maximum Installed Misalignment (reference)

Maximum center line misalignment per coupler size:

1" HS	+/- 3.5mm (+/- .138")
1-3/8"	+/- 5mm (+/- .197")
2"	+/- 6mm (+/- .236")
3"	+/- 5mm (+/- .197")

Minimum clearance needed to disengage coupler and pull stud

1" HS	0.59" (15mm)
1-3/8"	0.81" (21mm)
2"	1.00" (25mm)
3"	1.34" (34mm)

EJECTOR RETURN COUPLINGS

Ejector Return Couplings – General Information

Quick Action Ejector Return Couplings for Presses with Hydraulic Ejection

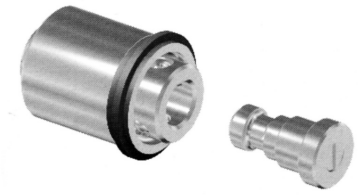

Economical

- Shortens mold changeover times
- Only one unit required per injection molding machine

Universal

- Can be put into existing molds to save time and money
- Hydraulic return by means of fixed coupling
- Pulsating ejection possible

Quick return coupling (incl. connecting

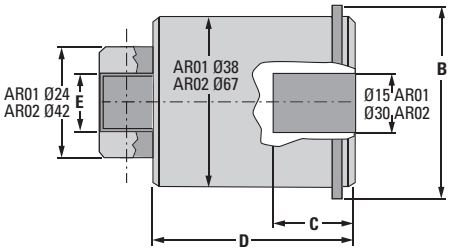

Connecting plug

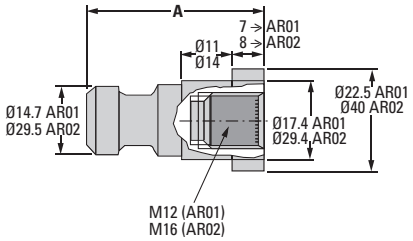

REF	TYPE
AR01 RESP. 02	QUICK RETURN COUPLING (INJECTION PRESS)
AR01 RESP. 02 P	CONNECTING PLUG (MOLD)

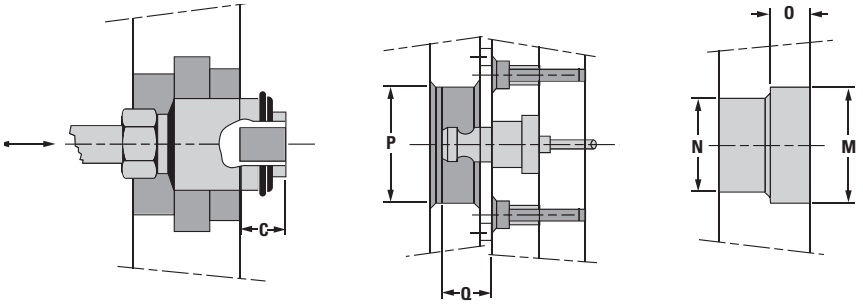

Ejector Return Couplings – AR

REF	A	B	C ±0.02	D	E	M	N	O +0.05 +0.02	P MIN.	Q MIN.	KN
AR01	38	43	18	43.5	M16	23	18	7	48	C +1	40
AR02	43	73	24	70.5	M20	42	32		80	C +1	140

Installation

1. Move the ejector plate to the molding position (mold closed).
2. Move also the ejector cylinder rod to the fully retracted position. It is important to check by hand, that the rod is fully pushed back to the fully retracted position before measuring.
3. Measure the distance between the coupling and the ejector cylinder rod.
4. Extend the ejector cylinder rod with an extra knock-out rod of the measured length + 30mm for AR01 and 50mm for AR02.
5. Move the mold ejector plates to the forward position (mold open).
6. Lock both the extra knock-out rod and at the other end the quick coupling.
7. Move the mold ejector plates back to the mold closed position and make the coupling between ejector plate and ejector cylinder rod. Make sure that the ejector plate and ejector cylinder rod are both in the mold closed position as soon as the coupling is made. If not, adjust.

Do not use with quick-change mold systems.

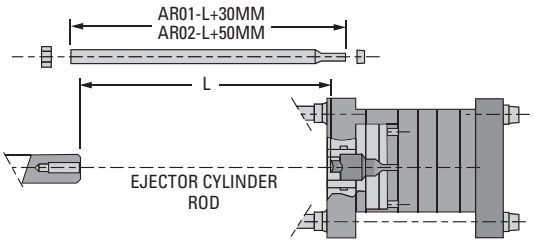

FRICTION PULLERS

Friction Pullers – Advantages and Benefits

DME Friction Pullers provide optimal parting line control. The Friction Puller controls plate movement by using friction at a specified setting to release the mold plate when the travel limit is achieved. Available in four sizes (10mm, 13mm, 16mm and 20mm), Friction Pullers may be used to consistently draw floating plates and inserts.

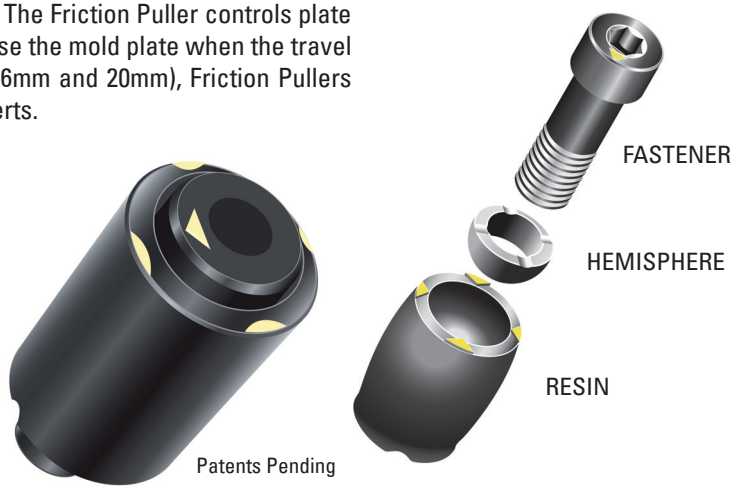

Friction Puller Advantages and Ben

- Reference arrows enable easy adjustment
- Self-locating even if plates shift due to thermal expansion or machining variances
- Internal self-venting eliminates the need for additional machining
- Fastener includes Nylok® patch for secure installation

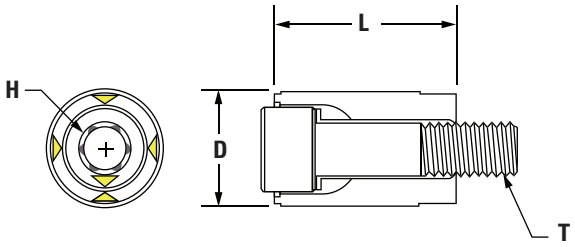

Technical Data

Material: Custom PPA Resin with 8620 fastener
Temperature: Maximum operating temperature - 300°F (150°C)
Removal: Before removing mold from the press for maintenance, rotate Friction Puller screw counter-clockwise with a ¾ turn to enable easy plate separation

ITEM NUMBER	D	L	T	H HEX	HOLE DEPTH	MAXIMUM FORCE (EACH)
FP10D	10	17	M5-.8	3	20	32.5 KG (72 LBS)
FP13D	13	20	M6-1	4	23	62.5 KG (138 LBS)
FP16D	16	25	M8-1.25	5	30	150.0 KG (330 LBS)
FP20D	20	28	M10-1.5	6	32	212.5 KG (468 LBS)

NOTE: Dimensions are in millimeters (mm).

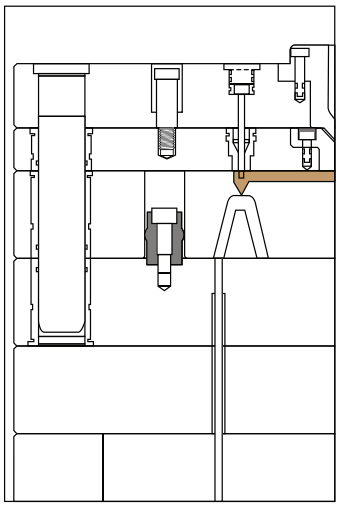

Mold Closed

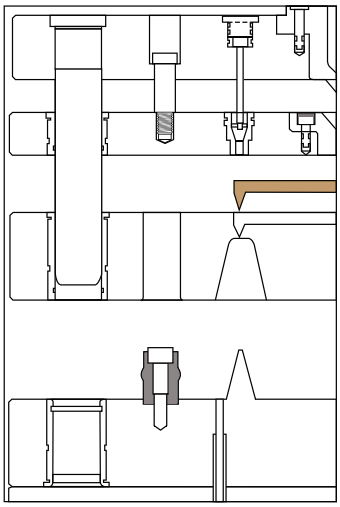

Mold Open

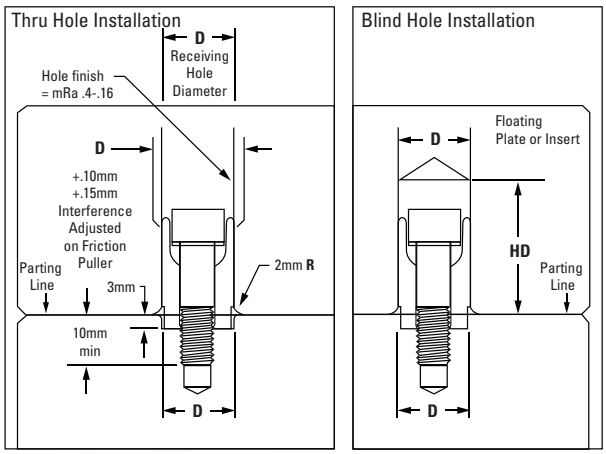

NOTE: Recommended interference fit for Friction Pullers is .1 to .15mm larger than the receiving hole. To adjust, rotate the screw clockwise and measure bulge to achieve proper fit. Adjust further if necessary with ¼ turn increments, lining up the reference arrows on the fastener to the resin.

LIMIT SWITCHES

Thinswitch® Liquid-Resistant Limit Switch

U.S. Patent
and 6,982,3

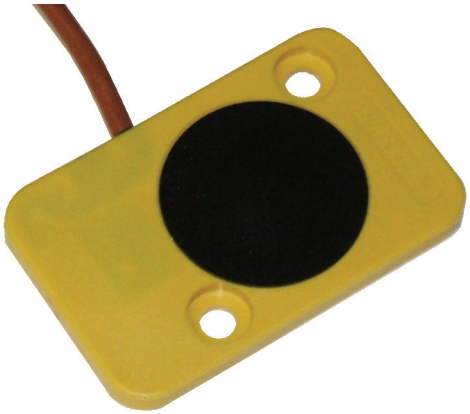

T222LR & HT291LR MODELS SPECIFICATIONS	
ELECTRICAL:	
250VAC	5 AMPS RESISTIVE
	4 AMPS INDUCTIVE (MAX)
28VDC (SEA LEVEL)	5 AMPS RESISTIVE
	4 AMPS INDUCTIVE (MAX)
OPERATING TEMPERATURE:	
T222LR STANDARD MODEL	175°F MAX (79.4°C MAX)
HT291LR HIGH TEMPERATURE MODEL	250°F MAX (121°C MAX)
SWITCHING:	SPDT
MATERIALS	
BODY:	FIBERGLASS-REINFORCED NYLON
DOME:	POLYURETHANE
BACK COVER:	POLYESTER FILM
WIRE LEADS:	22 GA STRANDED, 3-CONDUCTOR, SHIELDED CABLE, 6 FT. (1.8M) LONG, ENDS STRIPPED AND TINNED

General Description

Thinswitch® Liquid-Resistant Limit Switch is designed to verify ejector plate return in areas where occasional water or oil spray is present. The Thinswitch helps prevent accidental mold close in injection molding applications by providing a position switch that is tied to the injection molding machine control. The liquid resistant switch uses the same mounting hole locations as the original Thinswitch.

The Thinswitch has been tested for reliability over 10 million cycles without failure. Two switches can be used in series for larger molds to ensure the ejector plate return, preventing costly mold damage.

The Thinswitch® Limit Switch is designed for use in very low power mold protection control circuits. It is not intended to switch heavy loads in power applications.

RATED CURRENT (RESISTIVE) VS. OPERATING STEEL TEMPERATURE					
T222LR			HT291LR		
AMPS	°F	°C	AMPS	°F	°C
5.0	85	29.4	5.0	100	37.7
4.0	120	49.0	4.5	155	68.3
3.0	155	68.3	4.0	210	98.8
2.0	175	79.4	3.5	250	121.1

Features and Benefits

- **Over 10 million cycle life**
- 175°F (79.4°C) standard temperature rating
- 250°F (121°C) high-temperature unit for higher temperature needs
- Adjustable actuation between .187" and .250" from the mold base
- 3/16" thick design fits snugly behind the ejector plate between the rest buttons
- Stripped and tinned 6 ft. wire leads
- Mounting screws and wire clips included

NOTE: Premature spring and switch failure may result by adjusting the operating point more than .020" (.5mm) before the end of the ejector plate stroke.

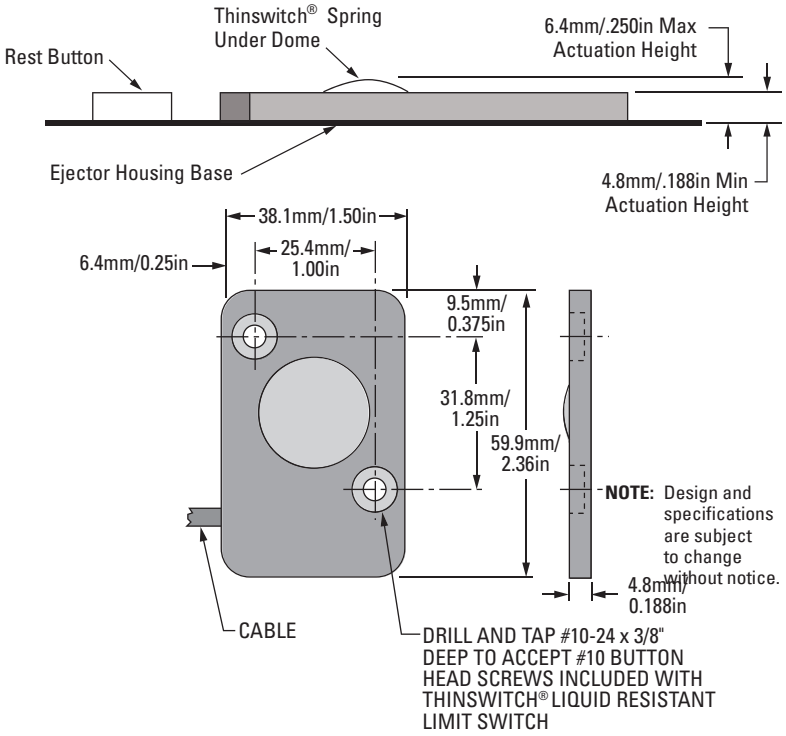

NOTE: Design and specifications are subject to change without notice.

LIMIT SWITCHES

Thinswitch® Standard & High Temperature Limit Switches



lo. 5,446,252

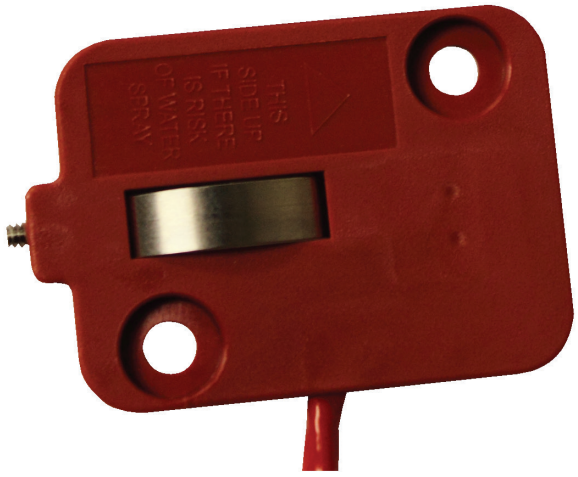

STANDARD TEMPERATURE THINSWITCH TSW2220	
SP222A	REPLACEMENT SPRING
CT222A	REPLACEMENT CABLE TAB

HIGH TEMPERATURE THINSWITCH HT291



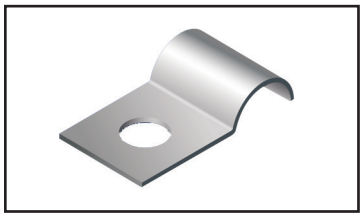

Thinswitch includes
2 cable tabs.

The Thinswitch® Limit Switch is specially designed to verify ejector plate return before permitting the mold to close in injection molding machines. Thin enough to fit inside the ejector housing, it can also be used for core slides, or any place space is limited.

The Thinswitch Limit Switch has been tested for reliability in more than 10 million cycles without failure. Two switches can be used in series for larger molds to ensure the ejector plate returns, preventing costly mold damage.

The Thinswitch Limit Switch is designed for use in very low power mold protection control circuits. It is not intended to switch heavy loads in power applications.

- Prevents costly damage by ensuring the ejector assembly is fully returned
- Adjustable operating point allows actuation between .187" and .250" from the base
- 3⁄16" thick design fits snugly behind the ejector plate in the space provided by the rest buttons
- Included mounting hardware installs the Thinswitch Limit Switch easily
- Stripped and tinned 6 ft. wire leads make the switch ready to install without modification
- 175°F (79.4°C) standard temperature rating enables use for most molding applications
- 250°F (121°C) high temperature unit is available for higher temperature needs
- **Quality tested over 10 million cycles to provide long, dependable service**
- Linear adjustment set screw can be set within .005 to .0025
- Premature spring and switch failure may result by adjusting the operating point more than .020" (.5mm) before the end of the ejector plate stroke
- In stock to provide same-day delivery

LIMIT SWITCHES

Thinswitch® Limit Switch

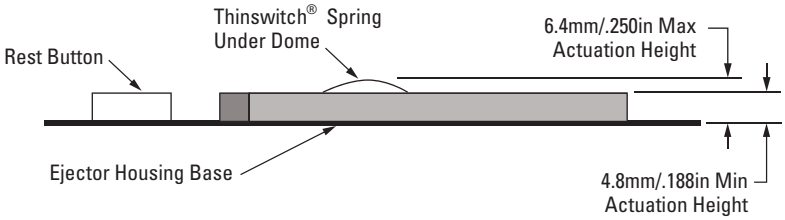

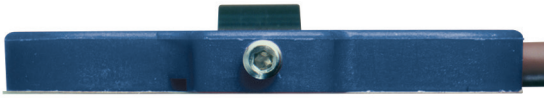

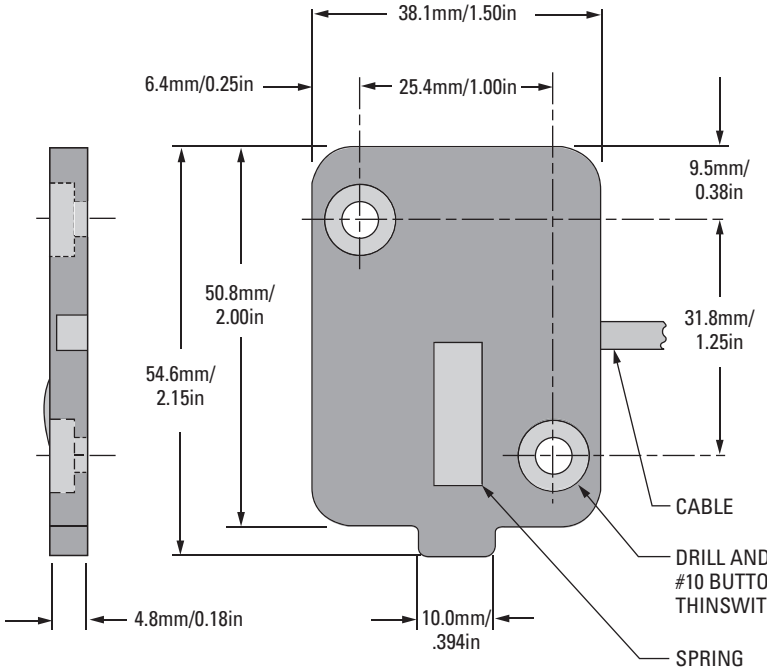

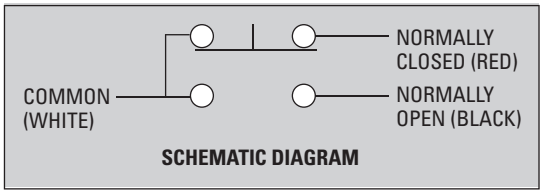

Two- and three-dimensional part files are available from the DME web site at www.dme.net

TSW2220 & HT291 MODELS	
SPECIFICATIONS	
ELECTRICAL:	
250VAC	5 AMPS RESISTIVE
	4 AMPS INDUCTIVE
28VDC (SEA LEVEL)	5 AMPS RESISTIVE
	4 AMPS INDUCTIVE
OPERATING TEMPERATURE:	
TSW2220 STANDARD TEMPERATURE MODEL	175°F MAX (79.4°C MAX)
HT291 HIGH TEMPERATURE MODEL	250°F MAX (121°C MAX)
SWITCHING:	SPDT
MATERIALS	
BODY:	FIBERGLASS-REINFORCED NYLON
SPRING:	STAINLESS STEEL
BACK COVER:	POLYESTER FILM
WIRE LEADS:	22 GA STRANDED, 3-CONDUCTOR, SHIELDED CABLE, 6 FT. (1.8M) LONG, ENDS STRIPPED AND TINNED

NOTE: Pressure required to activate the switch: 1 oz. min., 5 oz. max.

RATED CURRENT VS. STEEL TEMPERATURE					
TSW2220			HT291		
AMPS	°F	°C	AMPS	°F	°C
5.0	85	29.4	5.0	100	37.7
4.0	120	49.0	4.5	155	68.3
3.0	155	68.3	4.0	210	98.8
2.0	175	79.4	3.5	250	121.1

NOTE: Please contact DME for high-temperature applications.

THINSWITCH LIMIT SWITCH Includes:

(1) Thinswitch Limit Switch
(1) 4-40 Allen Wrench (for height adjustment)
(4) Screws (#10-24 x 1/2" button head)
(2) Wire Clamps (.5" x .82" x .5" with .213" mounting hole)
(1) Instruction Sheet

LIMIT SWITCHES

Global Thinswitch® Limit Switch



- A limit switch specially designed for use in injection molds with 3mm and 4mm rest buttons to verify that the ejector plate assembly is fully returned before allowing a mold to close after part ejection
- Switch mounting is accomplished using integral mounting holes, or by using a special bracket (included) that allows the switch to slide into place from the edge of the mold base without disassembling the mold
- A polyurethane dome and wire seal protect the internal switch mechanism from water or oil contamination, providing a longer switch life
- Reliability for over 14 million cycles without failure
- Prevents expensive mold repair and maximizes uptime
- Suitable for use in environments up to 80°C
- SPST Switching action, with gold-plated internal contacts for reliable operation
- Comes with wire leads (28 gauge stranded) and 2-conductor shielded cables, 2m long

RATED CURRENT (RESISTIVE) VS. OPERATING STEEL TEMPERATURE		
TSW2222		
AMPS	°F	°C
100	86	30
90	122	50
80	154.4	68
70	176	80
NOT INTENDED FOR INDUCTIVE LOADS		

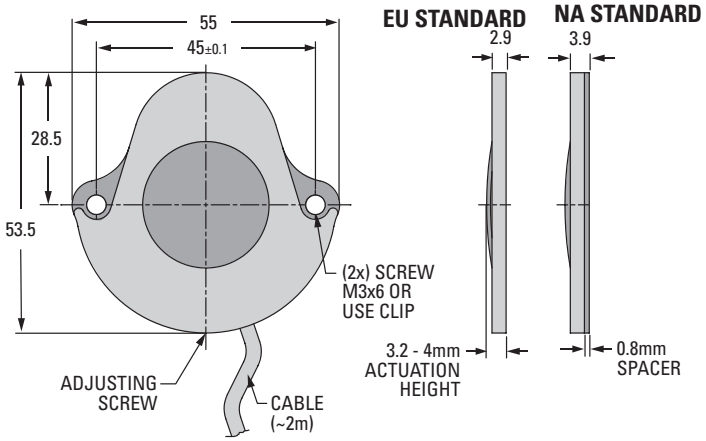

TSW2222	
SPECIFICATIONS	
ELECTRICAL:	24VDC
OPERATING TEMPERATURE:	
TSW2222 STANDARD MODEL	176°F MAX (80°C MAX)
SWITCHING:	SPST
MATERIALS	
BODY:	FIBERGLASS-REINFORCED NYLON
DOME:	POLYURETHANE
BACK COVER:	POLYESTER FILM
WIRE LEADS:	28 GA STRANDED, 2-CONDUCTOR, SHIELDED CABLE, 6 FT. (2M) LONG

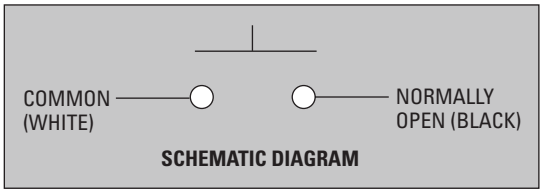

Installation instructions for bracket

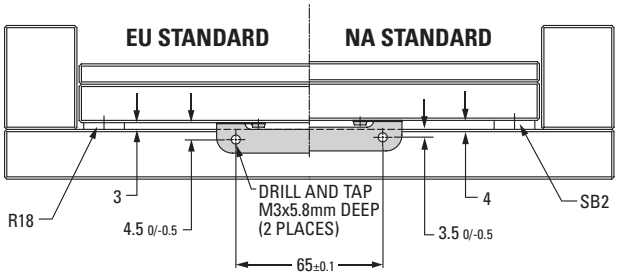

NOTE: Dimensions are in millimeters (mm).

Clip

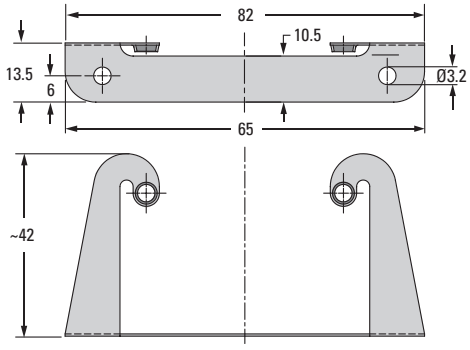



DME INNOVATIVE MOLD INTERLOCKS

COST-EFFECTIVE
INTERCHANGEABLE
WEAR SURFACES

MOLD INTERLOCKS

Table of Contents

LT-Series LifeTime Roller Locks

Benefits 186

LT-Series LifeTime Interlocks 187



IN2 Mold Interlocks

Benefits 192

IN2 Side Interlocks 193

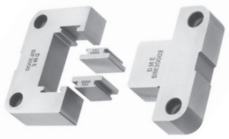

Straight-Side Interlocks

Interlock Dimensions 194



X-Style Interlocks

Interlock Dimensions 195

Machining Pockets 195



Parting Line and Tapered Interlocks

Parting Line 197

Tapered Round, INCH & Shoulder Plates 199

Tapered Round, METRIC & Shoulder Plates 201

Tapered Rectangular 202

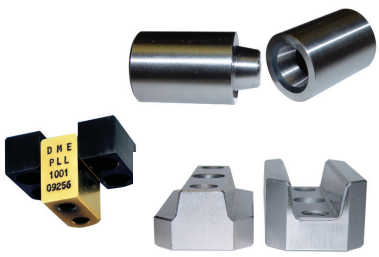

Black & Gold Mold Interlocks

INCH Side 203

INCH Top 204

METRIC Side 205

METRIC Top 206



Mold Straps 207

PROWELD 208



Visit store.dme.net for the latest pricing, product availability and online ordering.

eSTORE dme.net/estore

MOLD INTERLOCKS

LT-Series LifeTime Roller Side Mold Interlock

ALIGNING TOOLS IN DIFFERENT MOLDING APPLICATIONS

Alignment of the mold during the process is critical to the reliability and the achievement of high levels of O.E.E. (Overall Equipment Effectiveness), essential for a profitable molding process.

Tried and tested the newly designed and upgraded DME LifeTime lock addresses a gap in the Industry helping improve part quality, reduce cycle times and increase production uptime.



Designed for the best possible lifetime performance.

DME LT-Series LifeTime Roller Locks

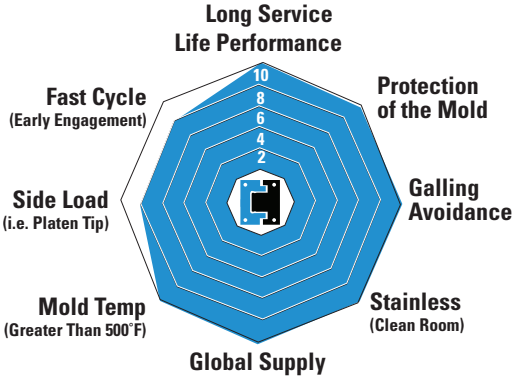

Competitor Side Locks

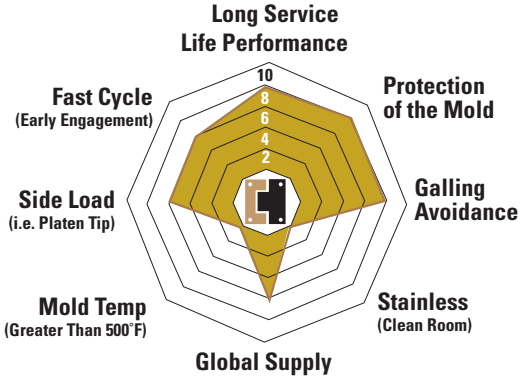

CHALLENGES OF ALIGNMENT

Several factors can challenge alignment through the life time of the tool: thermal expansion, aged equipment, worn leader pins and bushings are just some of the variables.

HEAT VARIATION

Heat variations can cause misalignment of the mold over time. Managing temperature changes in stationary and movable mold halves is critical:

1. **Mold cooling, including the temperature differential between mold halves.**

   Steel grows approximately 0.0000065 inch for every degree Fahrenheit of temperature differential. When A and B halves vary by as little as 20˚F and the mold is 30 inches long, the difference in plate lengths is about 0.004 inch… enough to start wearing of the alignment components. To extend mold life, try to keep the all of the mold plates (mold halves) at a consistent temperature.

2. **Hot runner system heating.**

   Since these systems are driven by electric heaters, they can be a major contributor to mold temperature variations if proper cooling is overlooked.

3. **Insulator plates.**

   As production begins, insulator plates (top and bottom of the mold) will create a temporarily controlled closed environment. But any heat generated within the mold will eventually migrate through the insulating materials into the press platens and affect the alignment of the mold halves.

MOLD INTERLOCKS

LT-Series LifeTime Roller Side Mold Interlock

PARTING LINE ALIGNMENT

Improper mold alignment can cause dimensional problems, flash, damaged components, or even a mold that won't run anymore.



Initial Engagement

Interlocks must be able to allow for interference/angled engagement as the movable platen tends to lean forward and sag out of alignment due to mold weight and the toggle function. Also the cavity/core alignment is influenced by the quality/condition and location of guide pins and bushings, if these components are worn or out of place the alignment of the movable and stationary halves will be off.

DME LT-Series Side Locks

Five Degrees =
0.018" Interference Fit

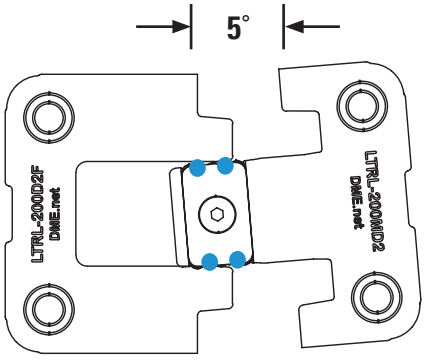

Tested to a 5° angle.

Standard Side Locks

One Tenth Degree =
0.00022" Interference Fit

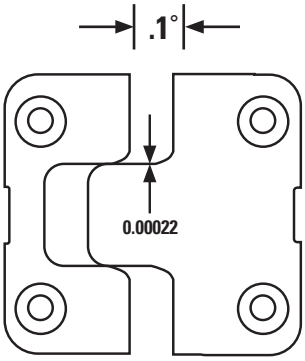

Two Degrees =
0.00724" Interference Fit

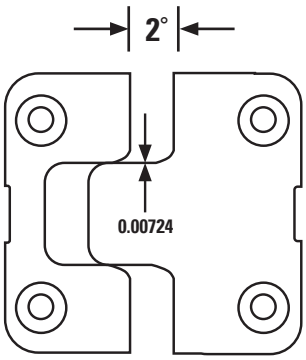

Early Alignment for Precision Shutoffs

Interlocks align mold halves to protect precision tapered shut off inserts from being damaged. This is especially true with cross over telescoping cavity and core inserts.

Final Lockup Holding Strength

Interlocks provide constrains to counter the pressure produced during injection ensuring the A and B plate do not shift which results in a constant molded part thickness and matched parting lines.

MOLD INTERLOCKS

LT-Series LifeTime Roller Side Mold Interlock

LT-Series LifeTime Locks 3"

Penta-Lock Design



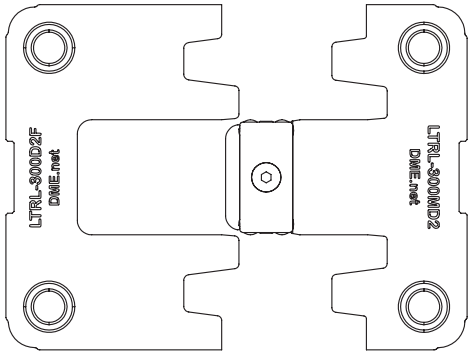

LT-Series LifeTime Locks 1-2"

Triple Lock Design

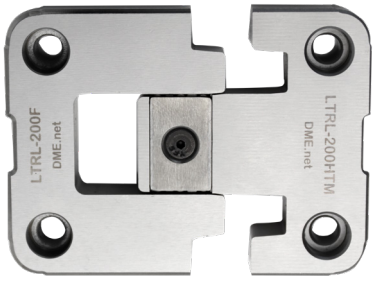

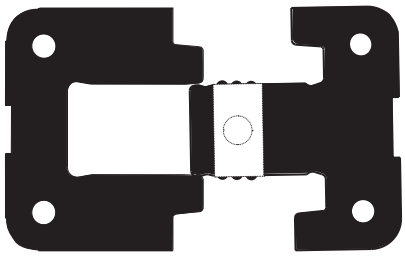

DME LT-Series
LIFETIME ROLLER LOCKS

THE BIG 3 REASONS

FOR LIFETIME LOCK SUCCESS

1. **Carbide Rollers Can Reduce Or Eliminate Galling During Initial Engagement**
   Movable platen tends to lean forward and sag out of alignment because of mold weight and the toggle function



Carbide Roller Bearings

2. **Early Alignment for Precision Shutoffs**
   Interlock aligns mold halves to protect precision tapered shut off inserts from being damaged. This is especially true with cross over telescoping inserts from one half to the other half

3. **Triple & Penta-Locking Configurations (Patented)**
   Constrains counter-pressure of the injection to ensure constant molded part thickness and matched parting lines, resulting in the most precise location and holding power on final lock-up in the industry.

Patent No. US 6,981,858 B2
Patent No. US 6,558,145 B2

MOLD INTERLOCKS

LT-Series LifeTime Roller Side Mold Interlock

3 Superior Base Materials To Fit Your Application

Standard Life Lock: made of **D2** outperforming competition

High Heat Life Lock: made from **DC53**, 2X the strength of D2, builds on the Standard Life Lock but offers the Industry's first lock designed specifically to withstand the demands of high temperatures (750°F) processing applications. Today's locks often anneal and prematurely wear due to the higher heat.

Stainless Life Lock: made of **440C stainless-steel** locks have the same long lasting performance design features as our standard lock and have been developed to meet the requirements of clean room and packaging applications.

PERFORMANCE TESTED

Lab Testing

- Millions of Cycles
- Virtually No Wear
- Grease on rollers were still evident after 200,000 cycles

Field Production Testing

- Minimal wear after a million cycles or 14 months of fast cycle production
- No locks have seized or fractured
- Locks did not need position rotation

Benefits of DME's Patented Roller Lock

Precision Alignment Combining the Technology of:

- Straight
- Tapered
- Carbide Roller Bearing
- Made in 3 materials to fit your application needs.

Advantages

- Non-binding low friction alignment
- 30% earlier aligned engagement
- Final taper lock up strength
- Full Interchangeability male and female
- Retrofittable to industry standard foot-print, no additional machining required

ALIGN YOUR PRIORITIES

WITH THE LIFETIME LOCK ADVANTAGE

3-POINT COMPARISON

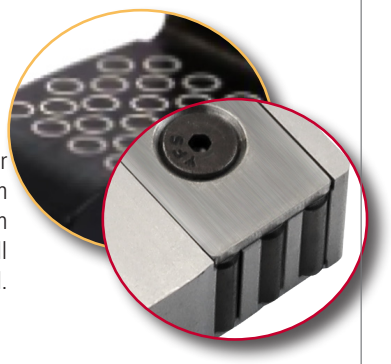

1. DME Carbide Roller Bearing glide into position vs. coated metal with debris catches that will wear and gall.

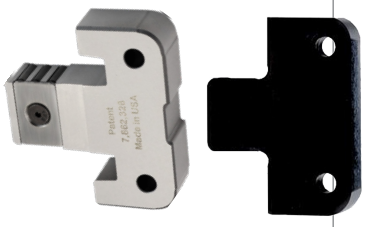

2. The LTL lock male section is elongated vs competitor locks allowing earlier engagement and larger miss-alignment angles without binding.

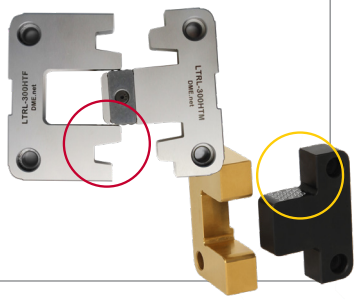

3. LTL design incorporates two additional locking features to ensure precise alignment vs. a single lock the competition offers.

MOLD INTERLOCKS

LT-Series LifeTime Roller Side Mold Interlock



PRODUCT SPECIFICATIONS

PENTA-LOCK CONFIGURATION

3 INCH LOCKS

Penta-Lock Is Ideal For Molds With Increased Closing Force & Higher Injection Pressures To Ensure A Precision Lock Up At Final Close.

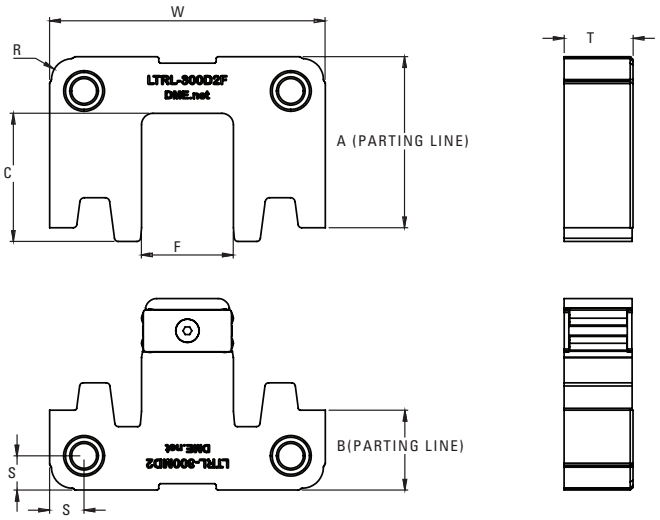

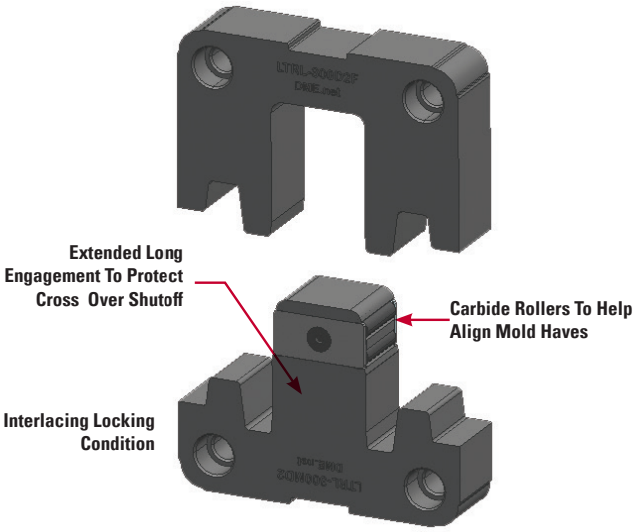

Item Number			STEEL TYPE	Dimensions given in inches.								SHCS SIZE
Standard Assembly (1 MALE, 1 FEMALE)	Shuttle Assembly (1 MALE, 2 FEMALE)	FEMALE ONLY		W	A	B	C	F	T	R	S	
LTRL-300D2	LTRL-300D2-SH	LTRL-300D2F	D2	3.00	1.875	0.875	1.405	1.000	0.750	0.240	0.375	1/4-20 x 7/8
LTRL-300HT	LTRL-300HT-SH	LTRL-300HTF	DC-53	3.00	1.875	0.875	1.405	1.000	0.750	0.240	0.375	1/4-20 x 7/8
LTRL-300SS	LTRL-300SS-SH	LTRL-300SSF	440C SS	3.00	1.875	0.875	1.405	1.000	0.750	0.240	0.375	1/4-20 x 7/8*

Locks are coated with Slide® Mold Shield Rust Preventive part number 42910P. Prior to installation wipe lock down with Slide Mold Cleaner 46910 to removal all saver. Apply Slide Super grease part number 43900 (included) to each carbide rollers to ensure high performance and long life. Super Grease Operating Temps: -45°F - +650°F/-42°C and is Ideal for mold assemblies used in the food and medical markets. Contains PTFE, no silicones.

* NOTE: SS series includes Stainless Steel SHCS

MOLD INTERLOCKS

LT-Series LifeTime Roller Side Mold Interlock

PRODUCT SPECIFICATIONS

TRIPLE LOCK CONFIGURATION

LOCK SIZE 1-2 INCHES



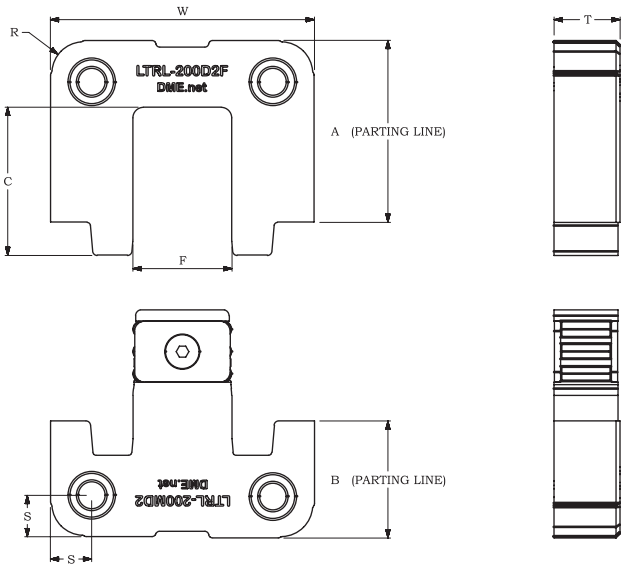

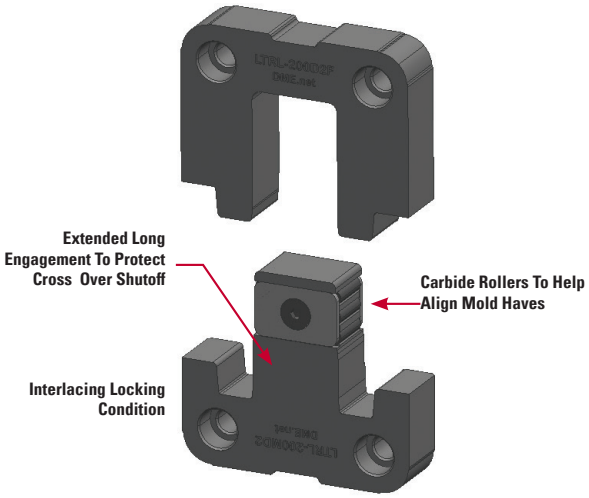

Item Number			STEEL TYPE	Dimensions given in inches.								SHCS SIZE
Standard Assembly (1 MALE, 1 FEMALE)	**Shuttle Assembly** (1 MALE, 2 FEMALE)	**FEMALE ONLY**		**W**	**A**	**B**	**C**	**F**	**T**	**R**	**S**	
LTRL-100D2	LTRL-100D2-SH	LTRL-100D2F	D2	1.00	1.125	0.875	0.735	0.400	0.375	0.177	0.250	10-32 x 1/2
LTRL-100HT	LTRL-100HT-SH	LTRL-100HTF	DC-53	1.00	1.125	0.875	0.735	0.400	0.375	0.177	0.250	10-32 x 1/2
LTRL-100SS	LTRL-100SS-SH	LTRL-100SSF	440C SS	1.00	1.125	0.875	0.735	0.400	0.375	0.177	0.250	10-32 x 1/2*
LTRL-150D2	LTRL-150D2-SH	LTRL-150D2F	D2	1.50	0.875	0.875	0.887	0.560	0.500	0.177	0.250	8-32 x 5/8
LTRL-150HT	LTRL-150HT-SH	LTRL-150HTF	DC-53	1.50	0.875	0.875	0.887	0.560	0.500	0.177	0.250	8-32 x 5/8
LTRL-150SS	LTRL-150SS-SH	LTRL-150SSF	440C SS	1.50	0.875	0.875	0.887	0.560	0.500	0.177	0.250	8-32 x 5/8*
LTRL-200D2	LTRL-200D2-SH	LTRL-200D2F	D2	2.00	1.375	0.875	0.120	0.750	0.500	0.240	0.313	10-32 x 5/8
LTRL-200HT	LTRL-200HT-SH	LTRL-200HTF	DC-53	2.00	1.375	0.875	0.120	0.750	0.500	0.240	0.313	10-32 x 5/8
LTRL-200SS	LTRL-200SS-SH	LTRL-200SSF	440C SS	2.00	1.375	0.875	0.120	0.750	0.500	0.240	0.313	10-32 x 5/8*

Locks are coated with Slide® Mold Shield Rust Preventive part number 42910P. Prior to installation wipe lock down with Slide Mold Cleaner 46910 to removal all saver. Apply Slide Super grease part number 43900 (included) to each carbide rollers to ensure high performance and long life. Super Grease Operating Temps: -45°F - +650°F/-42°C and is Ideal for mold assemblies used in the food and medical markets. Contains PTFE, no silicones.

* NOTE: SS series includes Stainless Steel SHCS

MOLD INTERLOCKS

IN2 Side Interlocks

DME Side Interlocks provide:

- Accurate alignment of mold halves
- Easy installation
- Easy and cost-effective maintenance
- Industry-compatible sizes

Installation

- Install four (4) IN2 Side Interlocks per mold (one per side)
- Install IN2 Side Interlocks on the Center Line of each side of the mold
- Replace IN2 Interchangeable Inserts as desired

Precision tolerancing, precision manufacturing means off-the-shelf interchangeability

DME IN2™ Mold Interlocks are manufactured to exacting standards. Precise dimensional and geometrical tolerances ensure interchangeability. Interchangeability that no one else in the industry matches – **no one**. Precision tolerancing and manufacturing ensures that all DME IN2 Mold Interlock components are interchangeable – off-the-shelf. Replace any DME IN2 Mold Interlock component independently – no need to replace the entire set. **No one** else offers this level of interchangeability – no one.

The DME Standard of Interchangeable Interlock Components sets DME apart from the industry.

And now …

DME offers another innovation: **IN2 Innovative Interlocks with Interchangeable Inserts**. Interchangeable Inserts offer you simple, cost-effective maintenance. No need to replace the entire set when you use **IN2 Innovative Interlocks with Interchangeable Inserts**.

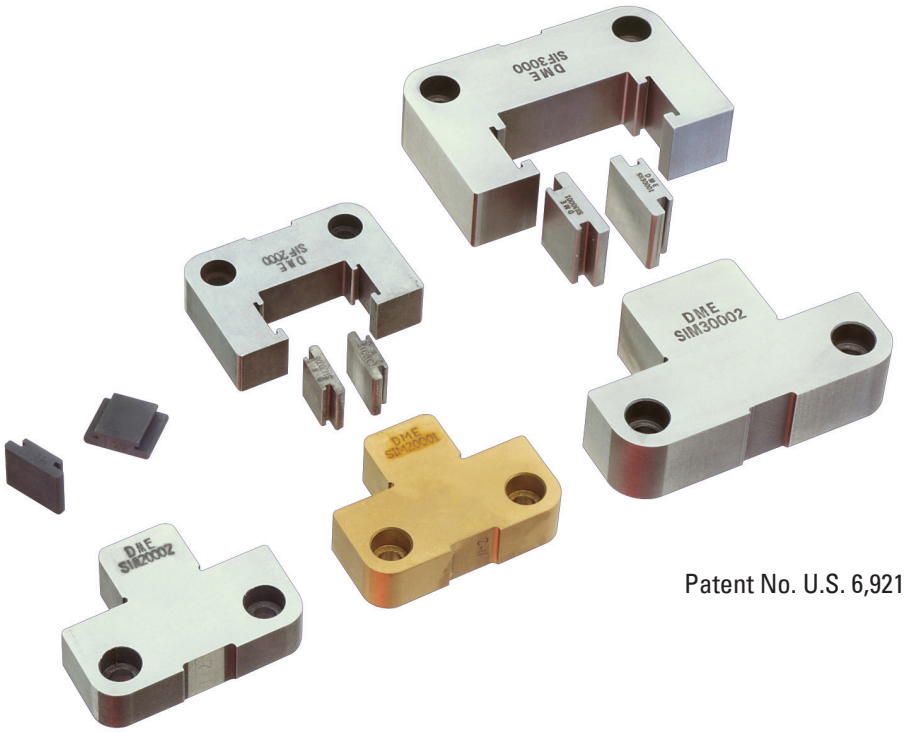

Patent No. U.S. 6,921,256 B2

MOLD INTERLOCKS

IN2 Side Interlocks

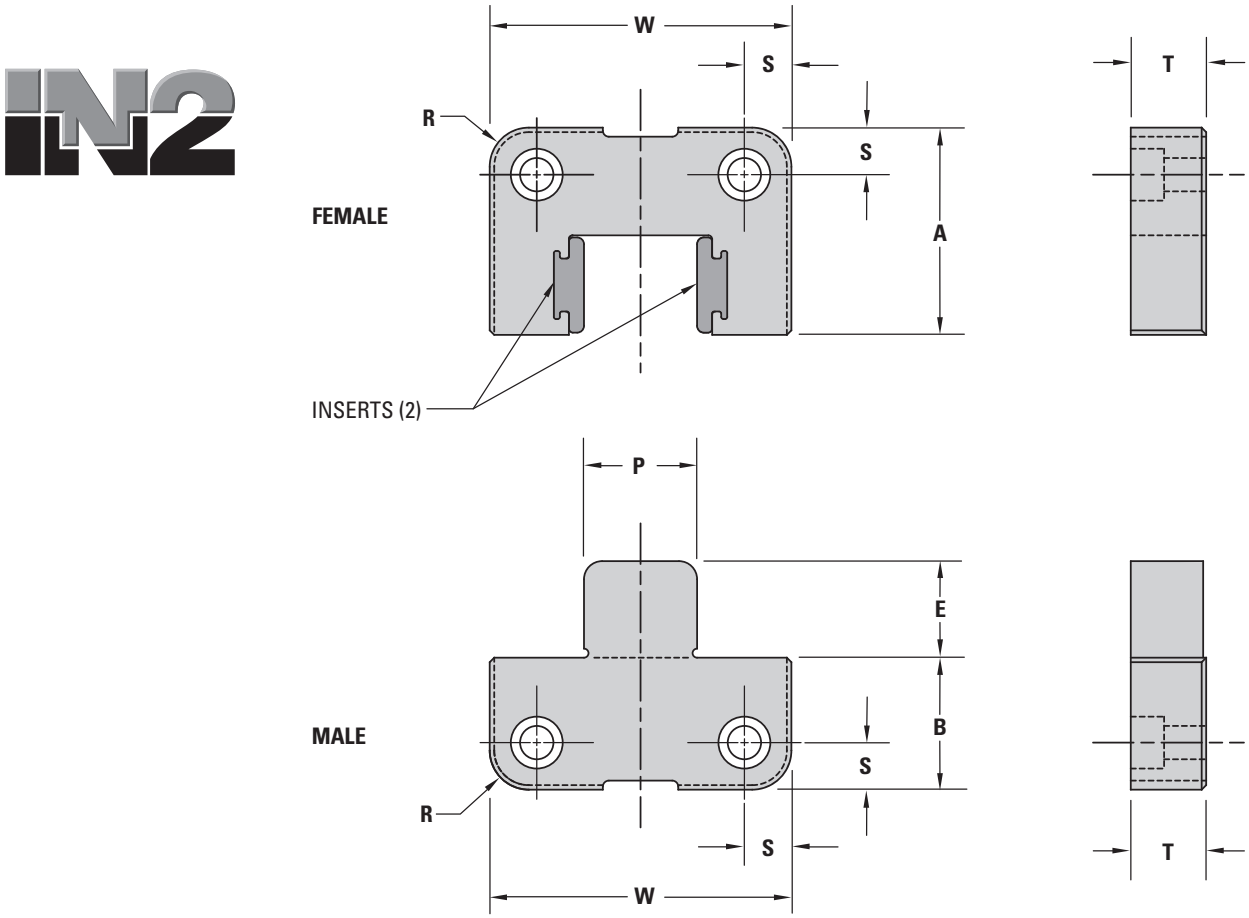

Side Interlock Dimensions

W WIDTH	A HEIGHT FEMALE	B HEIGHT MALE	E INTERLOCK HEIGHT	P INTERLOCK WIDTH	T THICKNESS	R RADII	S SCREW LOCATIONS	SHCS SIZE
1.500	.875	.875	.490	.450	.500	.26	.250	#8-32 X .62
2.000	1.375	.875	.640	.750	.500	.26	.312	#10-32 X .62
3.000	1.875	.875	.920	1.250	.750	.39	.375	1/4-20 X .88

Side Interlock Ordering Information – SIS, SII

Material – Male Interlock: High-Speed Tool Steel **Hardness:** 61-65 HRC

Material – Interlock Inserts: Graphitic Tool Steel **Hardness:** 48-52 HRC

INTERLOCK SET* ITEM NUMBER	W INTERLOCK WIDTH	REPLACEMENT INTERCHANGEABLE INSERTS** ITEM NUMBER
SIS150023	1.500	SII15003
SIS200023	2.000	SII20003
SIS300023	3.000	SII30003

*Sets include one (1) female, one (1) male, two (2) inserts, four (4) SHCS.

**Replacement Interchangeable Inserts are sold as pairs.

MOLD INTERLOCKS

Straight-Side Interlocks

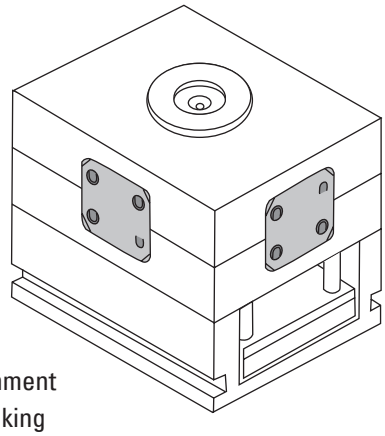



PLF

- Provides positive alignment for molds with interlocking cavities and cores

PLM

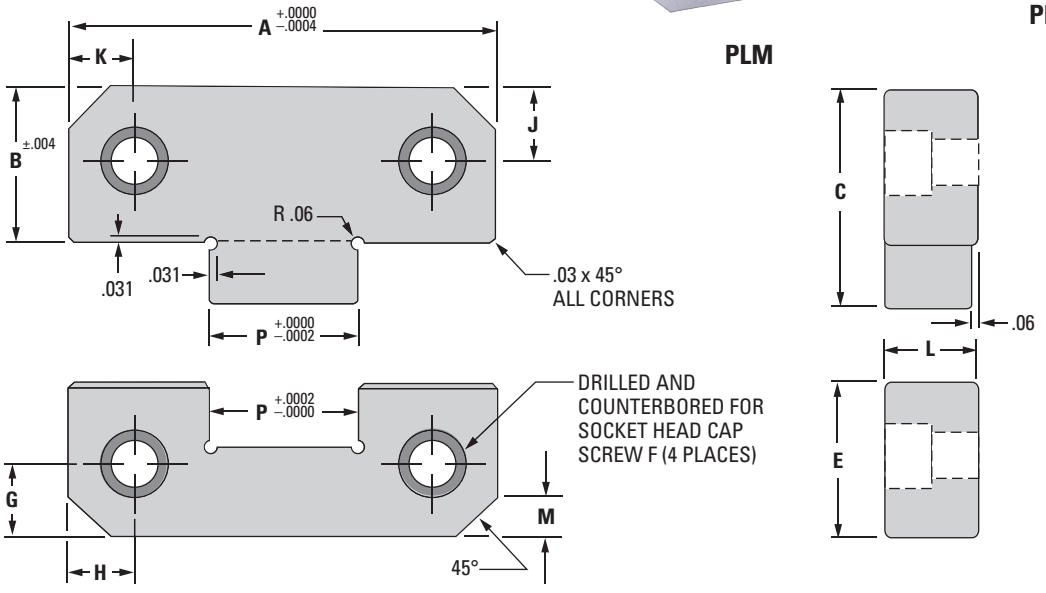

NOTES:
1. Recommend four (4) per mold.
2. Mount on centerline on all four sides to avoid problems with heat expansion.

Straight-Side Interlocks – PLM, PLF

Material: 8620 Steel-Carburized, Hardened and Ground **Hardness:** PLM: 50-55 HRC, PLF: 55-60 HRC

ITEM NUMBER	A NOMINAL	B	C	P NOMINAL	E	F*	G	H	J	K	L	M
PLM0001	1.5000	.870	1.18	.5000	.870	¼-20 X ¾	.281	.281	.437	.281	.620	.19
PLF0001												
PLM0002	2.0000	.870	1.18	.6800	.870	¼-20 X ¾	.375	.375	.437	.375	.620	.19
PLF0002												
PLM0003	3.0000	1.360	1.910	1.0000	1.370	⅜-16 X 1	.688	.375	.688	.375	.745	.19
PLF0003												
PLM0004	4.0000	1.870	2.640	1.3750	1.870	⅜-16 X 1	.875	.625	.875	.625	.745	.50
PLF0004												
PLM0005	5.0000	1.870	2.640	1.7500	1.870	½-13 X 1¼	.875	.750	.875	.750	1.120	.50
PLF0005												

*(2) F-size S.H.C.S included with each interlock.

MOLD INTERLOCKS

X-Style Straight-Side Interlocks

- Provides positive alignment between three adjacent plates when mold has two parting line openings, providing close alignment for interlock cavities and cores in stripper plate-type molds
- Used with AX-Series (floating plate) and X-Series (stripper plate) mold bases, as well as other mold bases with floating plates
- Interchangeable male PXM and female PLF details can be purchased individually



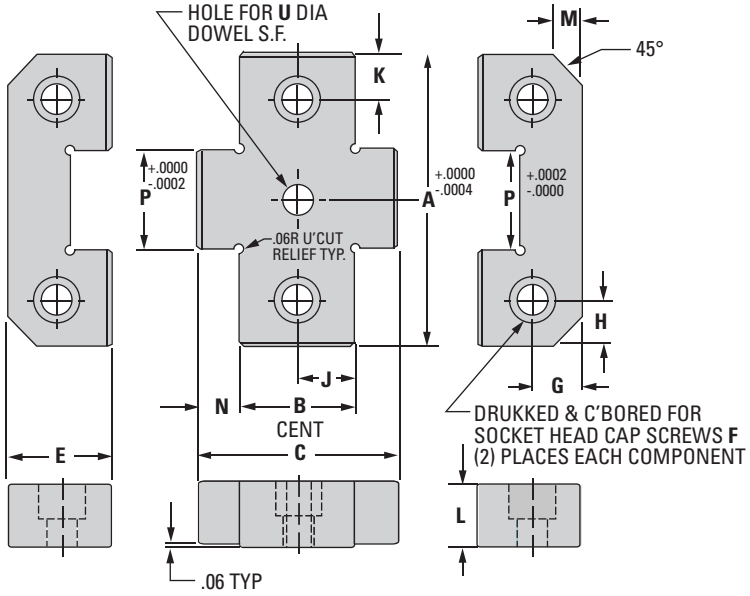

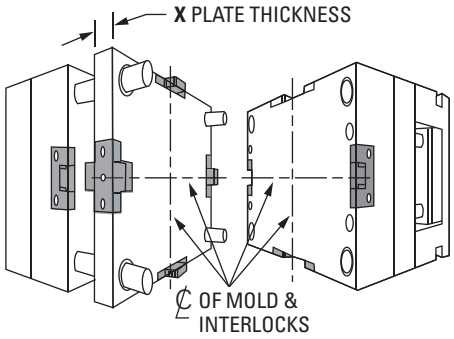

X-Style Straight-Side Interlocks – PLF, PXM

Material: AISI 8620 Steel-Carburized, Hardened and Ground **Hardness:** PXM: 50-55 HRC, PLF: 55-60 HRC

ITEM NUMBER		X PLATE	A			P										U
FEMALE	X-STYLE	THICKNESS	NOMINAL	B	C	NOMINAL	E	F	G	H	J	K	L	M	N	DIA
PLF0001 (2 REQ'D)	PXM1001	.875	1.5000	.850	1.470	.5000	.870	¼-20 X ¾	.281	.281	.425	.281	.620	.19	.310	.2500 (¼ DIA X 1" LG DWL)
	PXM2001	1.375		1.350	1.970						.675					
PLF0002 (2 REQ'D)	PXM1002	.875	2.0000	.850	1.470	.6800	.870	¼-20 X ¾	.375	.375	.425	.375	.620	.19	.310	.2500 (¼ DIA X 1" LG DWL)
	PXM2002	1.375		1.350	1.970						.675					
PLF0003 (2 REQ'D)	PXM1003	.875	3.0000	.850	1.950	1.0000	1.370	⅜-16 X 1	.688	.375	.425	.375	.745	.19	.550	.3750 (⅜ DIA X 1¼ LG DWL)
	PXM2003	1.375		1.350	2.450						.675					
PLF0004 (2 REQ'D)	PXM2004	1.375	4.0000	1.350	2.890	1.3750	1.870	⅜-16 X 1	.875	.625	.675	.625	.745	.50	.770	.3750 (⅜ DIA X 1¼ LG DWL)
	PXM3004	1.875		1.850	3.390						.925					
PLF0005 (2 REQ'D)	PXM2005	1.375	5.0000	1.350	2.890	1.7500	1.870	½-13 X 1¼	.875	.750	.675	.750	1.120	.50	.770	.5000 (½ DIA X 2" LG DWL)
	PXM3005	1.875		1.850	3.390						.925					

NOTE: (2) socket head cap screws and (1) dowel of the size and length indicated in the chart are included with each X-Style interlock. Additionally, (2) socket head cap screws of the size and length indicated in the chart are included with each female interlock.

MOLD INTERLOCKS

X-Style Straight-Side Interlocks

Basic Dimensions for Machining Pockets for X-Style and Female Interlocks on Centerlines of the Closed and Clamped Mold Assembly

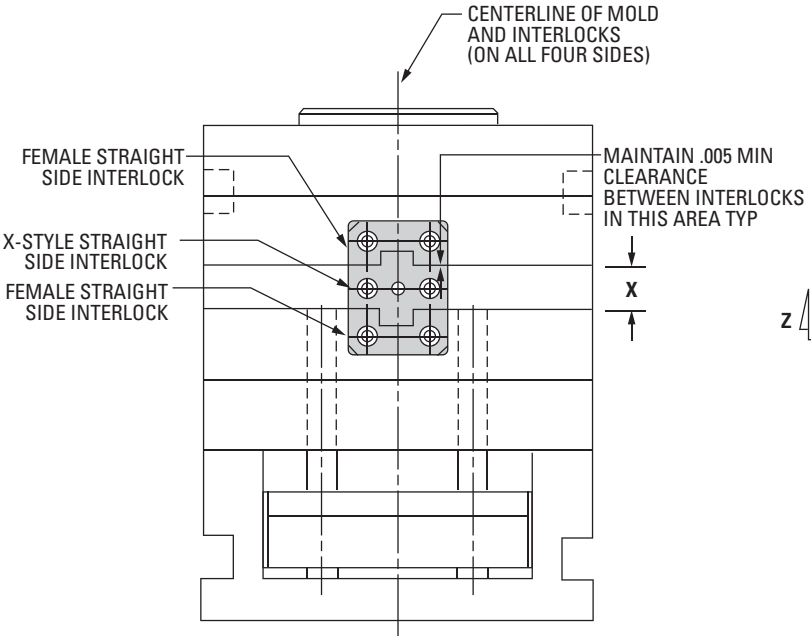

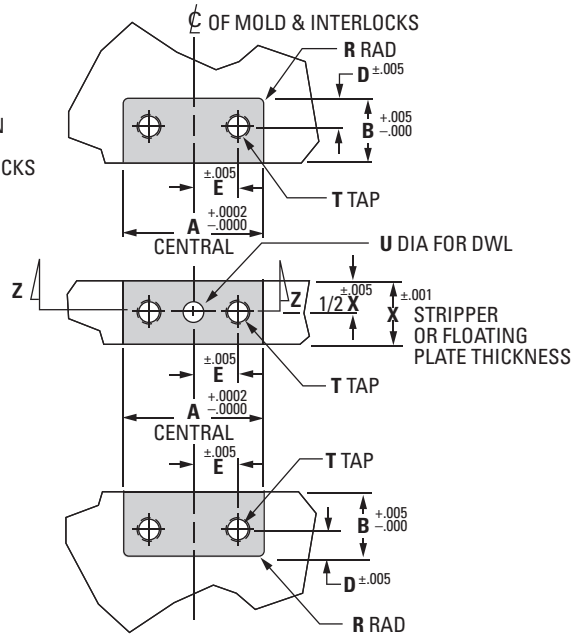

VIEW OF POCKET ON CENTERLINE OF MOLD

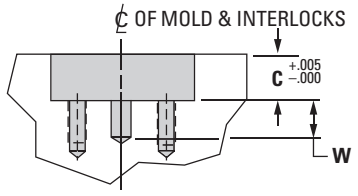

The DME X-Style straight-side interlocks are designed for use on molds with floating plates when the two parting lines must be closely aligned with each other. The X-Style straight-side interlocks are designed to be used, and to mate with two of the equivalent size DME female straight-side interlocks. The X-Style interlocks are typically used on "X" and "AX" series mold bases, as well as other mold bases with floating plates.

Typical application is for use on a mold base with a stripper or floating plate. (4) X-Style interlocks and (8) female interlocks are used per mold assembly. One set is used on centerline of each end and one set on centerline of each side.

Moldmaker to adjust fit to suit as needed for specific application. Please contact DME for complete installation instructions for the X-Style Interlocks.

ITEM NUMBER		X PLATE	A					T			R
FEMALE	X-STYLE	THICKNESS	CENT	B	C	D	E	TAP	Ø U	W	RAD
PLF0001 (2 REQ'D)	PXM1001	.875	1.5000	.875	.625	.281	.469	¼ - 20 UNC X .56 DEEP (¼-20 X ¾ LG S.H.C.S.)	.2500 (¼ DIA X 1" LG DWL)	.50	.12
	PXM2001	1.375									
PLF0002 (2 REQ'D)	PXM1002	.875	2.0000	.875	.625	.375	.625	¼-20 UNC X .56 DEEP (¼-20 X ¾ LG S.H.C.S.)	.2500 (¼ DIA X 1" LG DWL)	.50	.12
	PXM2002	1.375									
PLF0003 (2 REQ'D)	PXM1003	.875	3.0000	1.375	.750	.688	1.125	⅜-16 UNC X .88 DEEP (⅜-16 X 1" LG S.H.C.S.)	.3750 (⅜ DIA X 1¼ LG DWL)	.62	.12
	PXM2003	1.375									
PLF0004 (2 REQ'D)	PXM2004	1.375	4.0000	1.875	.750	.875	1.375	⅜-16 UNC X .88 DEEP (⅜-16 X 1" LG S.H.C.S.)	.3750 (⅜ DIA X 1¼ LG DWL)	.62	.38
	PXM3004	1.875									
PLF0005 (2 REQ'D)	PXM2005	1.375	5.0000	1.875	1.125	.875	1.750	½-13 UNC X 1.00 DEEP (½-13 X 1½ LG S.H.C.S.)	.5000 (½ DIA X 2" LG DWL)	1.00	.38
	PXM3005	1.875									

NOTE: (2) socket head cap screws and (1) dowel of the size and length indicated in the chart are included with each X-Style interlock. Additionally, (2) socket head cap screws of the size and length indicated in the chart are included with each female interlock.

MOLD INTERLOCKS

Parting Line Interlocks

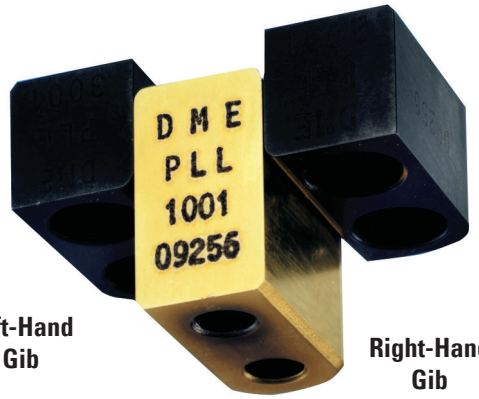

Left-Hand Gib

Right-Hand Gib

Center Male Interlock

- For accurate alignment between mold halves
- All machining can be done from the parting line … saving set-up time and machining costs
- Components can be purchased individually

Typical Application

The male interlock is typically installed in the ejector half of the mold. Left- and right-hand gibs are typically installed in the stationary half of the mold.

Mold machining and installation data are available. Contact DME.

Center Male Interlock – PLL

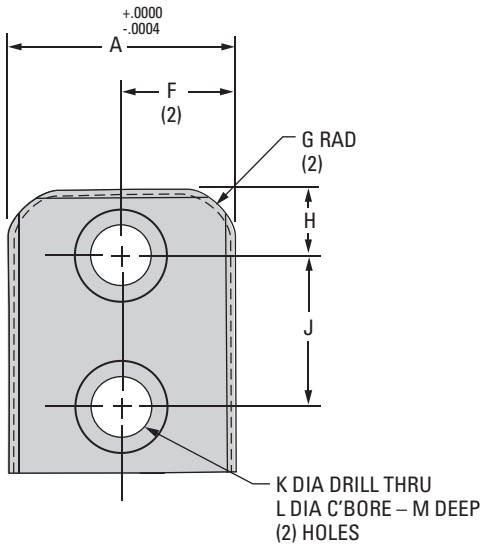

CENTER MALE INTERLOCK

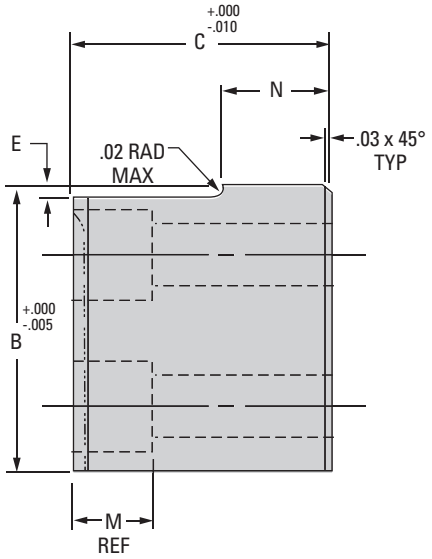

Material: S7 Steel, 52-58 HRC, Titanium Nitrided
80-85 HRC for wear and lubricity

ITEM NUMBER	A WIDTH	B LENGTH	C	E	F	G	H	J	K	L	M	N
PLL1001	.4998	1.000	.85	.030	.250	.19	.250	.500	.219	.344	.22	.36
PLL1002	.9998	1.500	1.35	.060	.500	.25	.312	.875	.281	.406	.28	.61
PLL1003	1.4998	2.000	1.72	.060	.750	.38	.438	1.125	.406	.594	.41	.73
PLL1004	1.9998	2.500	2.10	.060	1.000	.50	.562	1.375	.531	.781	.53	.86

See next page for right- and left-hand gibs for parting line interlocks.

MOLD INTERLOCKS

Parting Line Interlocks

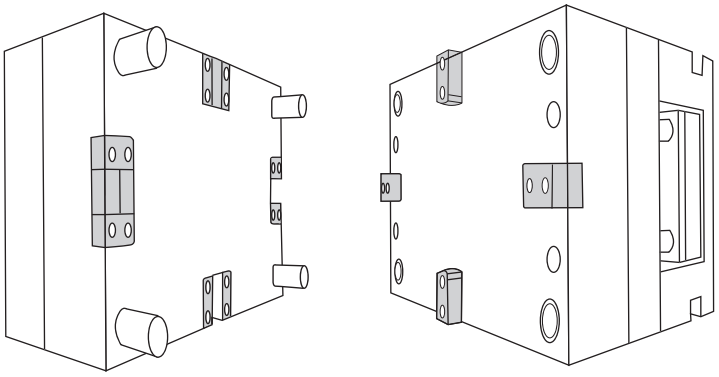

NOTES:

1. Select center, right and left interlock components that are the same length (size) to make one set (e.g., PLL-1002, PLL-2002 and PLL-3002).
2. Four sets of interlocks should be used in each application. They must be installed on the center line of each side of the mold.
3. Each component includes two socket head cap screws.

Gibs (left and right) – PLL

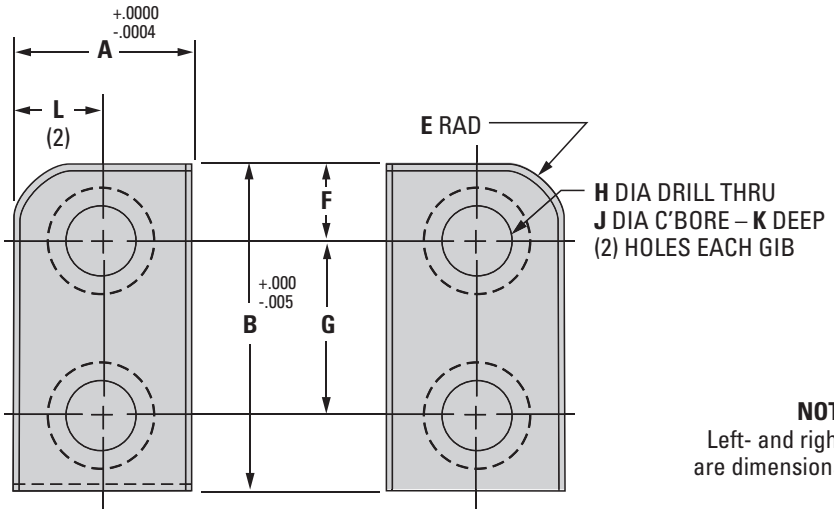

LEFT-HAND GIB INTERLOCK

RIGHT-HAND GIB INTERLOCK

NOTE:
Left- and right-hand gibs are dimensionally identical.

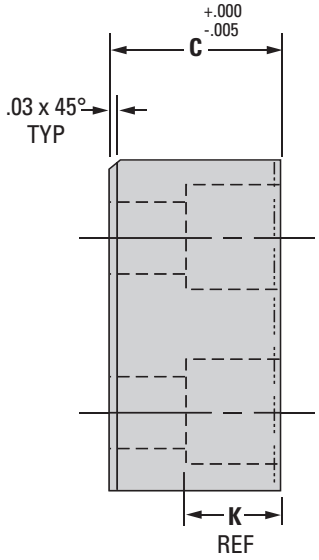

SIDE VIEW OF GIBS

Material: H-13 steel, 40-45 HRC, melanite coated for wear and lubricity

ITEM NUMBER		A	B								
LEFT-HAND GIBS	RIGHT-HAND GIBS	WIDTH	LENGTH	C	E	F	G	H	J	K	L
PLL3001	PLL2001	.5000	1.000	.500	.19	.250	.500	.219	.344	.22	.250
PLL3002	PLL2002	.7500	1.500	.750	.25	.312	.875	.281	.406	.28	.375
PLL3003	PLL2003	1.0000	2.000	1.000	.38	.438	1.125	.406	.594	.41	.500
PLL3004	PLL2004	1.2500	2.500	1.250	.50	.562	1.375	.531	.781	.53	.625

See previous page for center male parting line interlock.

MOLD INTERLOCKS

Tapered Interlocks (Round)

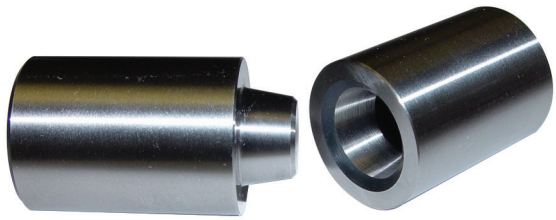

Through

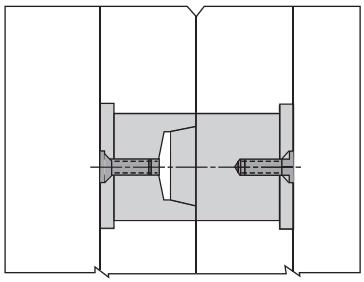

Combination

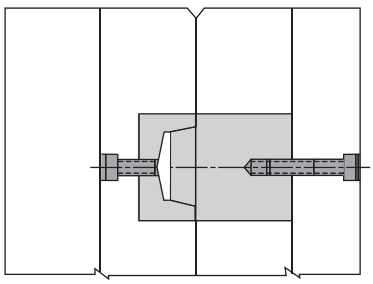

Blind

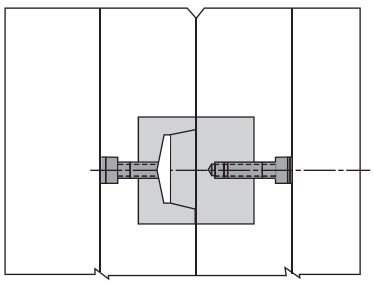

DME Tapered Interlocks provide positive metal-to-metal mold registry to align mold halves, mold plates or individual cavities and cores. The larger sizes are generally used with large molds or plates. The ½ and ¾ sizes are generally used with small molds or to align cavities and cores. At least two sets are recommended for small molds or inserts, four for medium-size molds and six or more for large molds.

To obtain accurate registry, the installation holes or pockets must be accurately aligned. For this reason, through construction is recommended because the two plates can be clamped together and line-bored. Combination construction can also be line-bored or at least partially line-bored to create a pilot for the blind pocket. Blind pocket construction in both plates is the most difficult installation. Close attention is required to make certain the two pockets line up.

The tapered interlocks are **intended to seat on the taper, NOT the face** of the interlock. This provides positive alignment without the need for the face of the male and female to touch. There could be a gap 0.005" or larger between the faces of the interlock in mold closed position.

There is stock allowance at the back of BOTH male and female details to permit fitting at assembly to match specific mold plate thicknesses and/or pocket depths.

MOLD INTERLOCKS

Tapered Interlocks (Round)

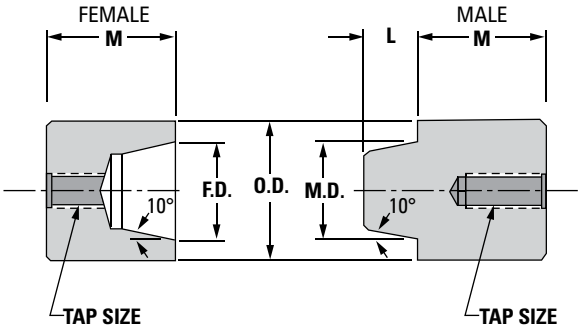

Female Tapered Interlocks – FT (Round)

O.D. +.0000 -.0005	F.D. +.000 -.001	TAP SIZE	M +.000 -.005	ITEM NUMBER
½	5/16	10-24	.707	FT0411
			.895	FT0414
			1.207	FT0419
			1.395	FT0422
¾	½	¼-20	.707	FT0611
			.895	FT0614
			1.207	FT0619
			1.395	FT0622
1"	⅝	¼-20	.707	FT0811
			.895	FT0814
			1.207	FT0819
			1.395	FT0822
1½	1"	5/16-18	1.145	FT1218
			1.395	FT1222
			1.645	FT1226
2"	1½	5/16-18	1.145	FT1618
			1.395	FT1622
			1.645	FT1626

Male Tapered Interlocks – MT (Round)

O.D. +.0000 -.0005	M.D. +.000 -.001	L	TAP SIZE	M +.000 -.005	ITEM NUMBER
½	5/16	¼	10-24	.702	MT0411
				.890	MT0414
				1.202	MT0419
				1.390	MT0422
¾	½	9/32	¼-20	.702	MT0611
				.890	MT0614
				1.202	MT0619
				1.390	MT0622
1"	⅝	11/32	¼-20	.702	MT0811
				.890	MT0814
				1.202	MT0819
				1.390	MT0822
1½	1"	½	5/16-18	1.140	MT1218
				1.390	MT1222
				1.640	MT1226
2"	1½	½	5/16-18	1.140	MT1618
				1.390	MT1622
				1.640	MT1626

Shoulder Plates – SP *(Must be ordered separately)*

MALE OR FEMALE O.D.	Ø H	K +.000 -.002	J	ITEM NUMBER
½	11/16	3/16	10-24	SP04
¾	1"	3/16	¼-20	SP06
1"	1 3/16	3/16	¼-20	SP08
1½	1 11/16	¼	5/16-18	SP12
2"	2 3/16	¼	5/16-18	SP16

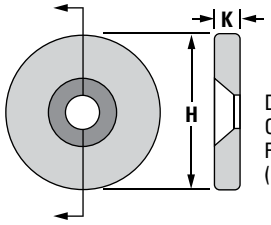

DRILLED & COUNTERSUNK FOR FLAT HEAD SCREW .50 LONG (INCLUDED)

MOLD INTERLOCKS

Tapered Interlocks (Round) – METRIC

Tapered Interlocks – FT

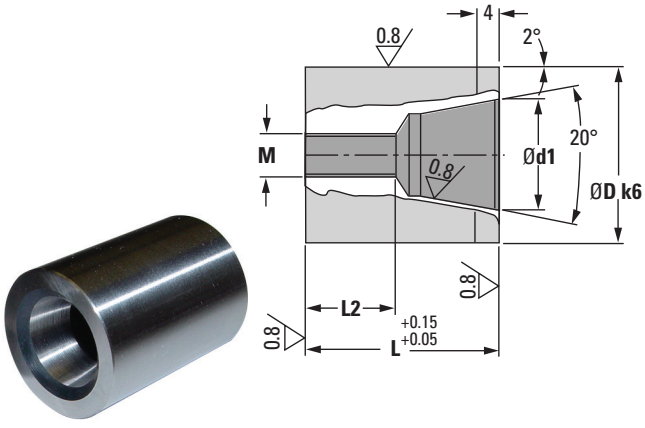

Material: DIN 1.7131 58-62 HRC

REF	L	M	D1	D	D2
FT1215	15	M5	7	12	7
FT2021	21	M6	13	20	9
FT2031	31				19
FT2521	21	M6	16	25	8
FT2531	31				18
FT2541	41				28
FT3230	30	M8	20	32	14
FT3250	50				34
FT4230	30	M8	30	42	12
FT4250	50				32

Tapered Interlocks – MT

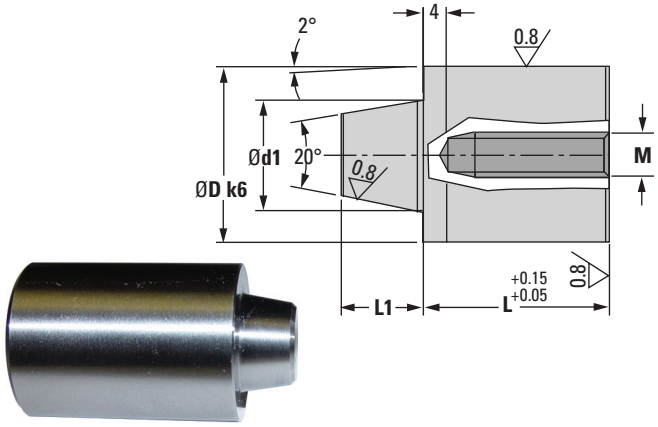

Material: DIN 1.7131 58-62 HRC

REF	L	L1	M	D1	D
MT1215	15	7	M5	7	12
MT2021	21	11	M6	13	20
MT2031	31				
MT2521	21	12	M6	16	25
MT2531	31				
MT2541	41				
MT3230	30	15	M8	20	32
MT3250	50				
MT4230	30	17	M8	30	42
MT4250	50				

Shoulder Plates for Tapered Interlocks – AGS

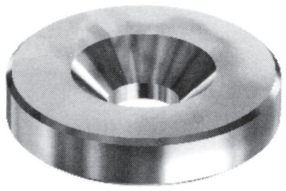

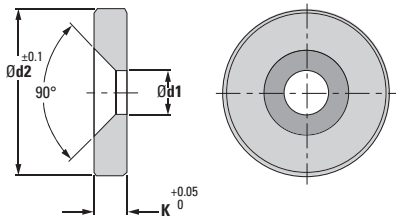

Material: DIN 1.7131 58-62 HRC

REF	D1	D2	+0.05 K 0	FOR
AGS12	5.5	16	5	FT12 MT12
AGS20	6.6	25		FT20 MT20
AGS25	6.6	30		FT25 MT25
AGS32	9	37	6	FT32 MT32
AGS42	9	47		FT42 MT42

AGS: Typical Application

***Measure actual height of assembled pair FT + MT and mill counterbore accordingly.**

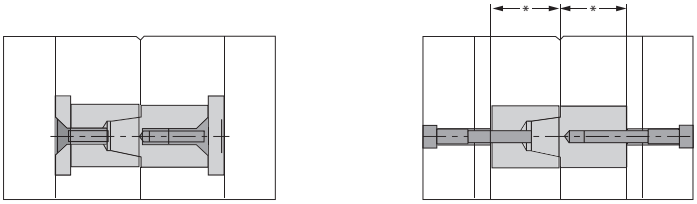

MOLD INTERLOCKS

Tapered Interlocks (Rectangular)

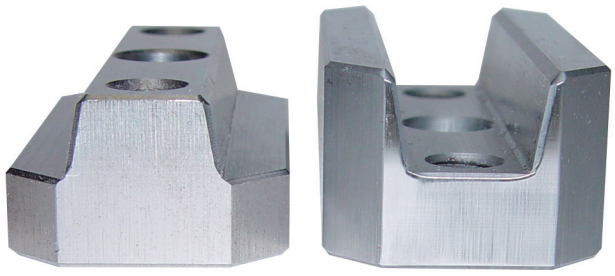

DME Standard Rectangular Tapered Interlocks provide positive, metal-to-metal alignment between mold or die halves, between plates or between individual cavities and cores. These Tapered Interlocks will maintain proper alignment while permitting thermal expansion between the mold or die halves. Mating sets are mounted in-line and/or perpendicular to one another (never parallel).

DME Rectangular Tapered Interlocks are made of shock-resisting S-7 tool steel, and are hardened and ground to precision tolerances, which permit interchangeability.

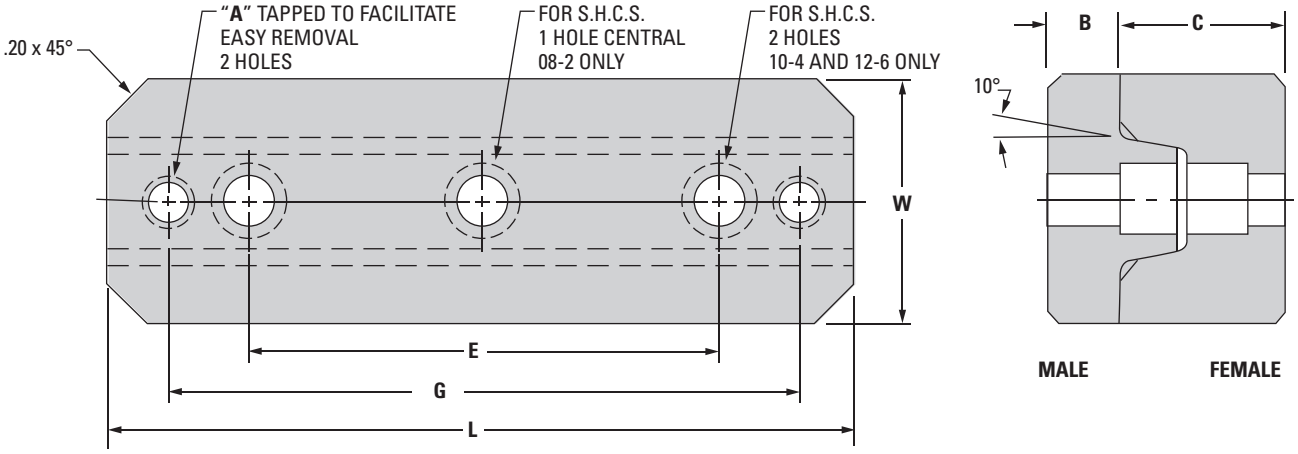

Male Tapered Interlocks – MTR (Rectangular)

E ±.005	L ±.010	W +.000 -.001	B ±.005	A	G	USES S.H.C.S.	ITEM NUMBER
—	1.980	.999	.312	¼-20	1.50	NO. 10-24	MTR082
2.500	3.980	1.249	.375	¼-20	3.38	¼-20	MTR104
4.000	5.980	1.499	.500	⅝-18	5.25	⅝-18	MTR126

Female Tapered Interlocks – FTR (Rectangular)

E ±.005	L ±.010	W +.000 -.001	C ±.005	A	G	USES S.H.C.S.	ITEM NUMBER
—	1.980	.999	.69	¼-20	1.50	NO. 10-24	FTR082
2.500	3.980	1.249	.87	¼-20	3.38	¼-20	FTR104
4.000	5.980	1.499	1.00	⅝-18	5.25	⅝-18	FTR126

NOTE: Male and female lengths must match.

Installation Guidelines

Each mounting pocket must be accurately aligned with the pocket for the mating interlock in the other half of the mold or die. The width of each pocket serves as a precision keyway to maintain the steadfast position of each interlock.

Each pocket must be flat and parallel to the parting line. The mating interlocks should be fitted with a slight preload to ensure metal-to-metal engagement.

The pocket lengths should be long enough to provide clearance.

MOLD INTERLOCKS

Black and Gold Side Interlocks

Industry-Leading Interchangeability

Thanks to precision manufacturing and precision tolerancing, every DME mold interlock component can be replaced independently, eliminating the need to swap out an entire set.



DME Side Interlocks provide:

- Accurate alignment of mold halves
- Easy installation
- Industry-compatible sizes

Installation

- Install four (4) Side Interlocks per mold (one per side)
- Install Side Interlocks on the Center Line of each side of the mold

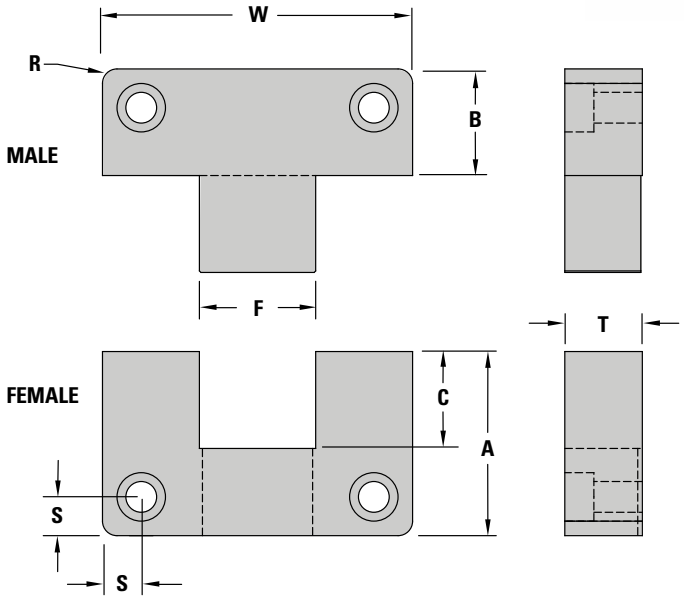

MOLD BASE WIDTH X LENGTH	RECOMMENDED SIDE INTERLOCK
8X8 TO 8X12	BGS1000
8X12 TO 11X14	BGS1250 TO BGS2000
11X14 TO 14X18	BGS3000
14X18 TO 16X26	BGS4000
16X26 TO 18X36	BGS5000
18X36 TO 24X36	BGS6000

Black and Gold Side Interlocks – BGS

Female Interlock – **Material**: A2 Steel **Heat Treat:** Core Hardened to 58-62 HRC **Surface Treatment:** TiN – Titanium Nitride Coated
Male Interlock – **Material**: AISI H-13 Steel **Heat Treat:** 40-44 HRC **Surface Treatment:** Melonited (SBN)

ASSEMBLY ITEM NUMBER	W +.0000 -.0004	A +.000 -.002	B +.000 -.002	C	F .0001 / .0002 CLEARANCE PER SIDE	T +.0000 -.0004	R RADIUS	S ±.01	SHCS SIZE
BGS1000	1.000	1.125	.875	.530	.5000	.375	.187	.250	#10-32 X ½"
BGS1250	1.250	1.125	.875	.660	.5000	.500	.187	.250	#8-32 X ⅝"
BGS1500	1.500	.875	.875	.560	.5630	.500	.219	.250	#8-32 X ⅝"
BGS2000	2.000	1.375	.875	.660	.7500	.500	.219	.312	#10-32 X ⅝"
BGS3000	3.000	1.875	.875	1.130	1.2500	.750	.281	.375	¼-20 X ⅞"
BGS4000	4.000	2.375	1.375	1.250	1.5000	1.000	.531	.500	⅜-16 X 1"
BGS5000	5.000	2.875	1.375	1.630	2.0000	1.250	.531	.625	½-13 X 1¼"
BGS6000	6.000	2.875	1.375	1.750	2.5000	1.500	.500	.625	½-13 X 1¾"

MOLD INTERLOCKS

Black and Gold Top Interlocks

DME Top Interlocks provide:

- Accurate alignment of mold halves
- Easy installation
- Industry-compatible sizes

Installation

- Install four (4) Top Interlocks per mold (one per side)
- Install Top Interlocks on the Center Line of each side of the mold

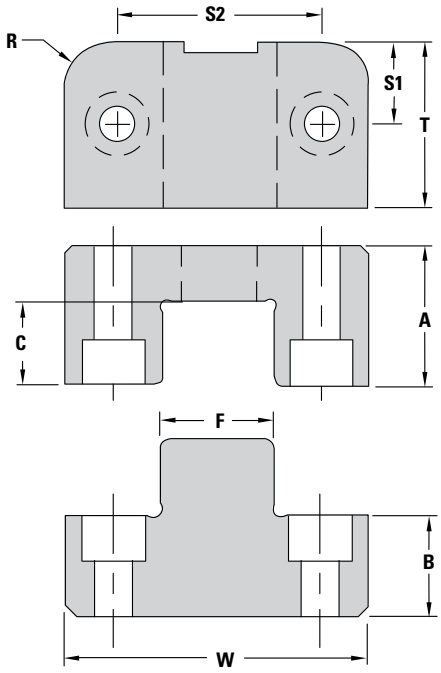

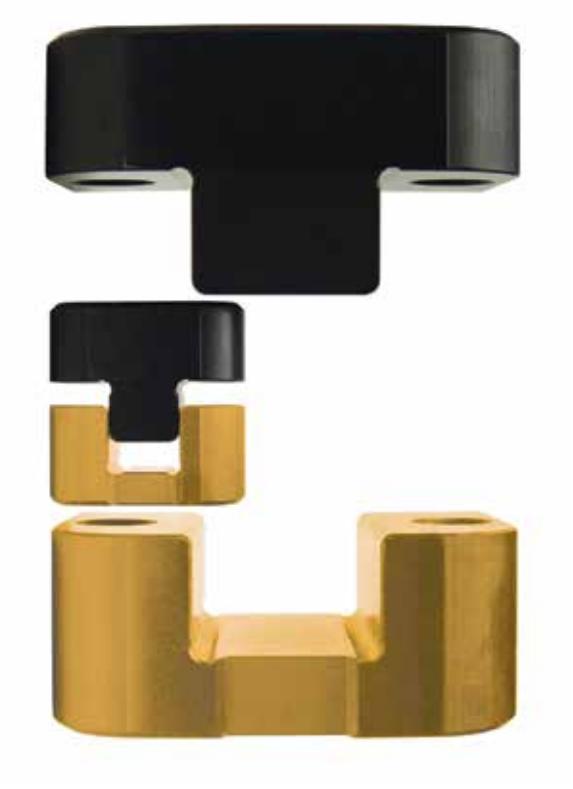

MOLD BASE WIDTH X LENGTH	RECOMMENDED TOP INTERLOCK
8X8 TO 8X12	BGT1000
8X12 TO 11X14	BGT1250 TO BGT2500
11X14 TO 14X18	BGT3000 TO BGT3500

Black and Gold Top Interlocks – BGT

Female Interlock – **Material:** A2 Steel **Heat Treat:** Core Hardened to 58-62 HRC **Surface Treatment:** TiN – Titanium Nitride Coated
Male Interlock – **Material:** AISI H-13 Steel **Heat Treat:** 40-44 HRC **Surface Treatment:** Melonited (SBN)

ASSEMBLY ITEM NUMBER	W +.0000 -.0004	A +.000 -.002	B +.000 -.002	C	F .0001 / .0002 CLEARANCE PER SIDE	T +.000 -.002	R RADIUS	S1 ±.01	S2 ±.01	SHCS SIZE MALE	SHCS SIZE FEMALE
BGT1000	1.000	.500	.375	.280	.3750	.500	.192	.250	.688	#6-32 x ½"	#6-32 x ⅝"
BGT1250	1.250	.625	.500	.410	.4380	.625	.255	.312	.875	#6-32 x ⅝"	#6-32 x ¾"
BGT12501	1.250	.625	.500	.385	.4380	.750	.255	.375	.875	#8-32 x ⅝"	#8-32 x ¾"
BGT1500	1.500	.875	.750	.530	.5000	.875	.255	.437	1.000	#8-32 x ⅞"	#8-32 x 1"
BGT15001	1.500	.875	.375	.505	.5000	1.000	.255	.500	1.000	#10-32 x ½"	#10-32 x 1"
BGT2000	2.000	1.125	.750	.660	.7500	1.000	.380	.500	1.375	#10-32 x 1"	#10-32 x 1¼"
BGT20001	2.000	.875	.625	.505	.7500	1.125	.380	.562	1.375	¼ -20 x ¾"	¼-20 x 1"
BGT2500	2.500	1.375	.625	.755	1.000	1.500	.380	.750	1.750	¼-20 x ¾"	¼-20 x 1½"
BGT3000	3.000	1.500	.750	.780	1.1250	1.125	.505	.562	2.250	¼-20 x 1"	¼-20 x 1¾"
BGT3000S	3.000	1.250	.875	.750	1.1250	1.750	.505	.875	2.250	5/16-18 x 1⅛"	5/16-18 x 1⅝"
BGT3500	3.500	1.750	.750	1.000	1.5000	2.000	.505	1.000	2.500	⅜-16 x 1"	⅜-16 x 2"

MOLD INTERLOCKS

Black and Gold Side Interlocks – Metric

Industry-Leading Interchangeability

Thanks to precision manufacturing and precision tolerancing, every DME mold interlock component can be replaced independently, eliminating the need to swap out an entire set.

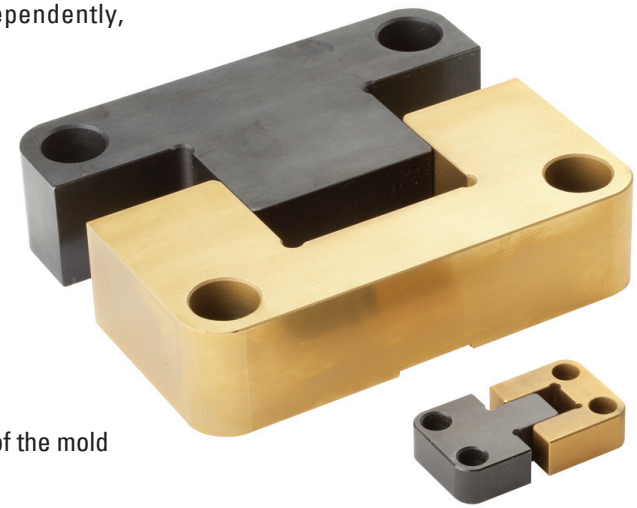

DME Side Interlocks provide:

- Accurate alignment of mold halves
- Easy installation
- Industry-compatible sizes

Installation

- Install four (4) Side Interlocks per mold (one per side)
- Install Side Interlocks on the Center Line of each side of the mold

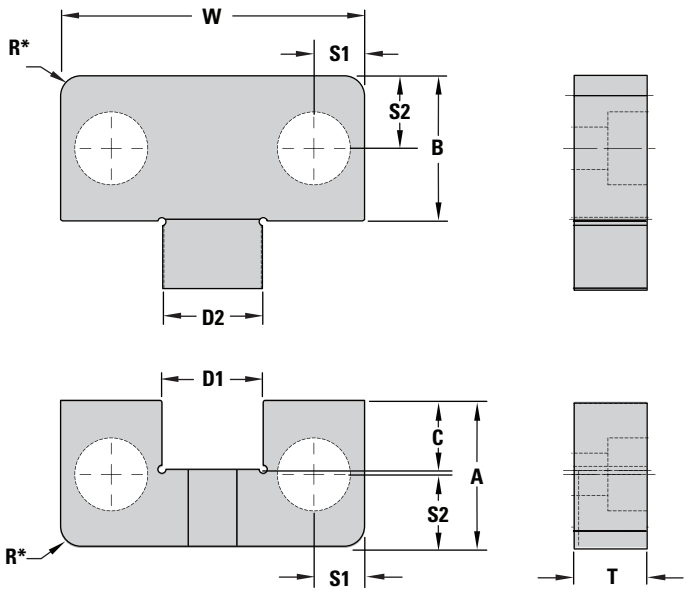

* Part radius "R" is 1.00mm larger than recommended pocket radius.

Black and Gold Side Interlocks – BGS

Female Interlock – **Material:** D2 Steel **Heat Treat:** Core Hardened to 57-61 HRC **Surface Treatment:** TiN – Titanium Nitride Coated
Male Interlock – **Material:** AISI H-13 Steel **Heat Treat:** 40-44 HRC **Surface Treatment:** Melonite (SBN)

ITEM NUMBER	T +.00 -.05	W +.00 -.01	A +.00 -.05	B +.00 -.05	C +0.5 +0.2	D1 +0.005 +0.002	D2 -0.005 -0.002	R POCKET RADIUS +0/-0.5	S1 ±.02	S2 ±.02	SHCS
BGS05016	16.00	50.00	21.50	21.50	12.0	17.000	17.000	5.0	8.0	11.0	M6-1.0 × 20 LG
BGS07519	19.00	75.00	36.00	36.00	17.0	25.000	25.000	5.0	12.5	18.0	M10-1.5 × 25 LG
BGS10019	19.00	100.00	45.00	45.00	23.0	35.000	35.000	5.0	15.0	22.0	M10-1.5 × 25 LG
BGS12525	25.00	125.00	45.00	45.00	23.0	35.000	35.000	5.0	20.5	22.0	M10-1.5 × 30 LG

NOTE: To order an individual Male interlock, add the suffix "M" to the item number.
To order an individual Female interlock, add the suffix "F" to the item number.

MOLD INTERLOCKS

Black and Gold Top Interlocks – METRIC

Industry-Leading Interchangeability

Thanks to precision manufacturing and precision tolerancing, every DME mold interlock component can be replaced independently, eliminating the need to swap out an entire set.

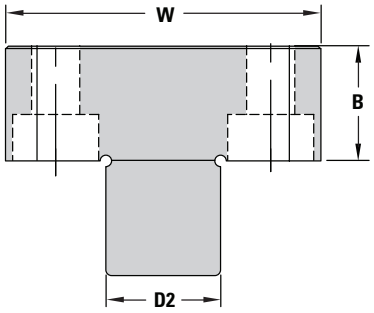

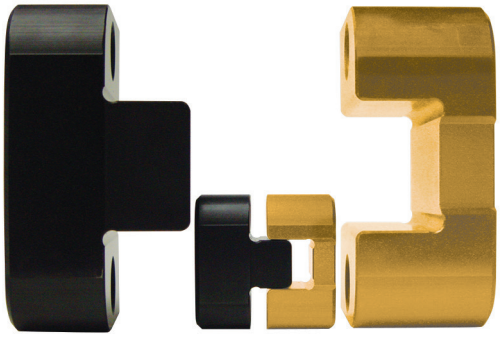

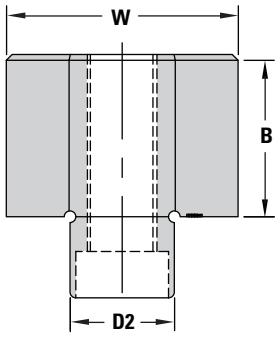

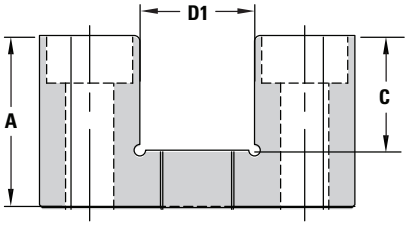

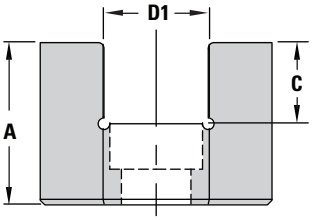



BGT02020

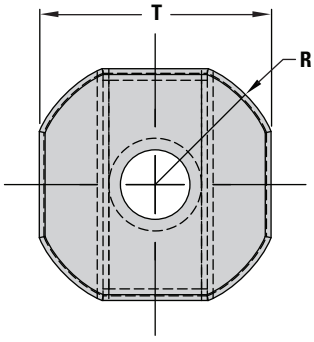

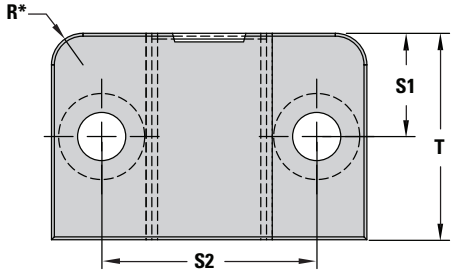

Installation

- Install four (4) Top Interlocks per mold (one per side)
- Install Top Interlocks on the Center Line of each side of the mold

DME Top Interlocks provide:

- Accurate alignment of mold halves
- Easy installation
- Industry-compatible sizes

Black and Gold Top Interlocks – BGT

Female Interlock – Material: D2 Steel **Heat Treat:** Core Hardened to 57-61 HRC **Surface Treatment:** TiN – Titanium Nitride Coated
Male Interlock – Material: AISI H-13 Steel **Heat Treat:** 40-44 HRC **Surface Treatment:** Melonite (SBN)

ITEM NUMBER	T +.00 -.05	W +.00 -.01	A +.00 -.05	B +.00 -.05	C +0.5 +0.2	D1 +0.005 +0.002	D2 -0.005 -0.002	R POCKET RADIUS +0/-0.5	S1 ±0.2	S2 ±0.2	SHCS (F)	SHCS (M)
BGT02020	20.00	20.00	14.00	14.00	7.0	9.000	9.000	5.0	–	–	M4 × 12 LG	M4 × 25 LG
BGT03526	26.00	35.00	25.00	15.00	16.0	11.000	11.000	8.0	13.0	23.0	M5 × 30 LG	M5 × 20 LG
BGT04530	30.00	45.00	25.00	15.00	16.0	15.000	15.000	8.0	15.0	30.0	M6 × 30 LG	M6 × 18 LG
BGT05536	36.00	55.00	30.00	20.00	20.0	20.000	20.000	8.0	18.0	37.5	M8 × 35 LG	M8 × 25 LG
BGT07536	36.00	75.00	35.00	20.00	26.0	30.000	30.000	8.0	18.0	52.0	M10 × 40 LG	M10 × 25 LG
BGT10045	45.00	100.00	60.00	20.00	41.0	40.000	40.000	8.0	22.5	70.0	M10 × 65 LG	M10 × 25 LG

NOTE: To order an individual Male interlock, add the suffix "M" to the item number.
To order an individual Female interlock, add the suffix "F" to the item number.
* Part radius "R" is 1.00mm larger than recommended pocket radius.

MOLD STRAPS

Mold Straps – Features and Benefits

DME Mold Straps – Features and Benefits

- Ideal for securing mold assembly stack-ups during transport or storage
- Offered as pairs in three sizes
- Constructed of cast metal for strength and durability
- Yellow-powder coating provides corrosion resistance and high visibility

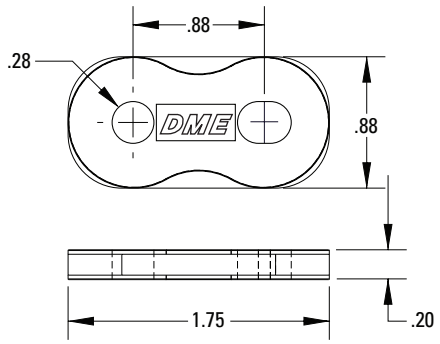



ITEM NO	SHCS	CAPACITY	TORQUE
MLDST088	¼" - 20 UNC x ⅝" LONG	930 LBS	13 FT LBS

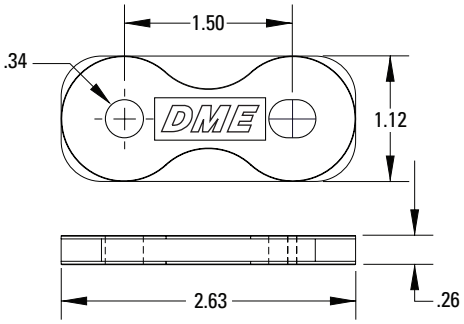



ITEM NO	SHCS	CAPACITY	TORQUE
MLDST150	5/16" -18 UNC x ¾" LONG	1220 LBS	27 FT LBS

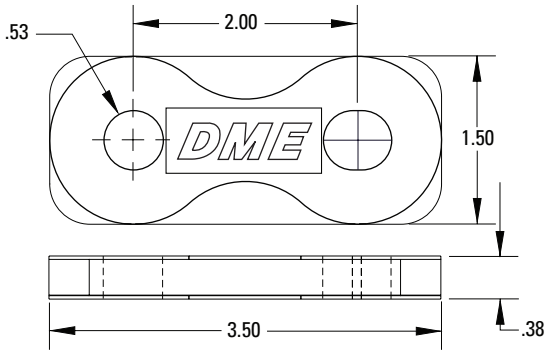



ITEM NO	SHCS	CAPACITY	TORQUE
MLDST200	½"-13 UNC x 1" LONG	1740 LBS	130 FT LBS

PROWELD

ROHS/WEEE COMPLIANT MICRO-WELDING SYSTEM FOR PRECISION MOLD REPAIR



ProWeld Micro-Welding System

As an essential resource to thousands of customers around the globe, DME is diligent in making certain its products are compatible in every region of the world. That's why every component within the ProWeld system satisfies all international compliances. This included RoHS (Restriction of Hazardous Substances) that prohibits or restricts the use of six potentially harmful materials in electronic equipment, and WEEE (Waste Electrical and Electronic Equipment) that requires equipment made after August 2005 to be returned to the manufacturer and recycled, rather than just "thrown away."



SPECIFICATIONS	
Consumable Power	600 VA
Output Voltage	0 – 9V
Control System	SCR Switching System
Dimensions (inches)	W6.5 x D17.75 x H16

Standard Equipment

Complete ProWeld system includes:

ITEM NUMBER	DESCRIPTION
UMW0001	Power pack with welding cord, grounding cord and plate,power cord, foot switch and all accessories listed below
P-501	Weld Cord
P-502	Ground Cord
UMW0002	N51–Standard SKH-51 steel powder (40 grams) (63 Rc; for D-2/M-2/S-7 steels)
UMW0003	N80–Standard NAK80 steel powder (40 grams) (38-40 Rc; for P-20/P-21 steels)
UMW0004	NAK80–Standard steel sheet 10 sheets, 0.1T x 5W x 100L) (38-40 Rc; for P-20/P-21 steels)
UMW0005	NTA1–Ni Alloy sheet (10 sheets, 0.1T x 30W x 70L) (135HV; for all steels)
UMW0006	NTA2–Ni Alloy sheet (10 sheets, 0.2T x 30W x 70L) (135HV; for all steels)
UMW0009	Magnet electrode (2 dia. x 50L)
UMW0010	Magnet electrode (3 dia. x 50L)
UMW0011	Magnet electrode (4 dia. x 60L)
UMW0012	Magnet electrode (4 dia. x 50L)

ITEM NUMBER	DESCRIPTION
UMW0013	Standard electrode (2 dia. x 50L)
UMW0014	Standard electrode (3 dia. x 50L)
UMW0015	Standard electrode (4 dia. x 50L)
UMW0016	Standard electrode (1.2T x 5W x 35L)
UMW0017	Standard electrode holder (black) (used with UMW0015)
UMW0018	Magnet electrode holder (brown) (used with UMW0011 and UMW0012)
UMW0019	Standard electrode holder (black) (used with UMW0016)
UMW0020	Standard electrode holder (black) (used with UMW0013)
UMW0021	Standard electrode holder (black) (used with UMW0014)
UMW0022	Magnet electrode holder (brown) (used with UMW0009 and UMW0010)

NOTE: Contact DME for replacement parts and additional welding materials.

CAVITY AND CORE COMPONENTS

Table of Contents

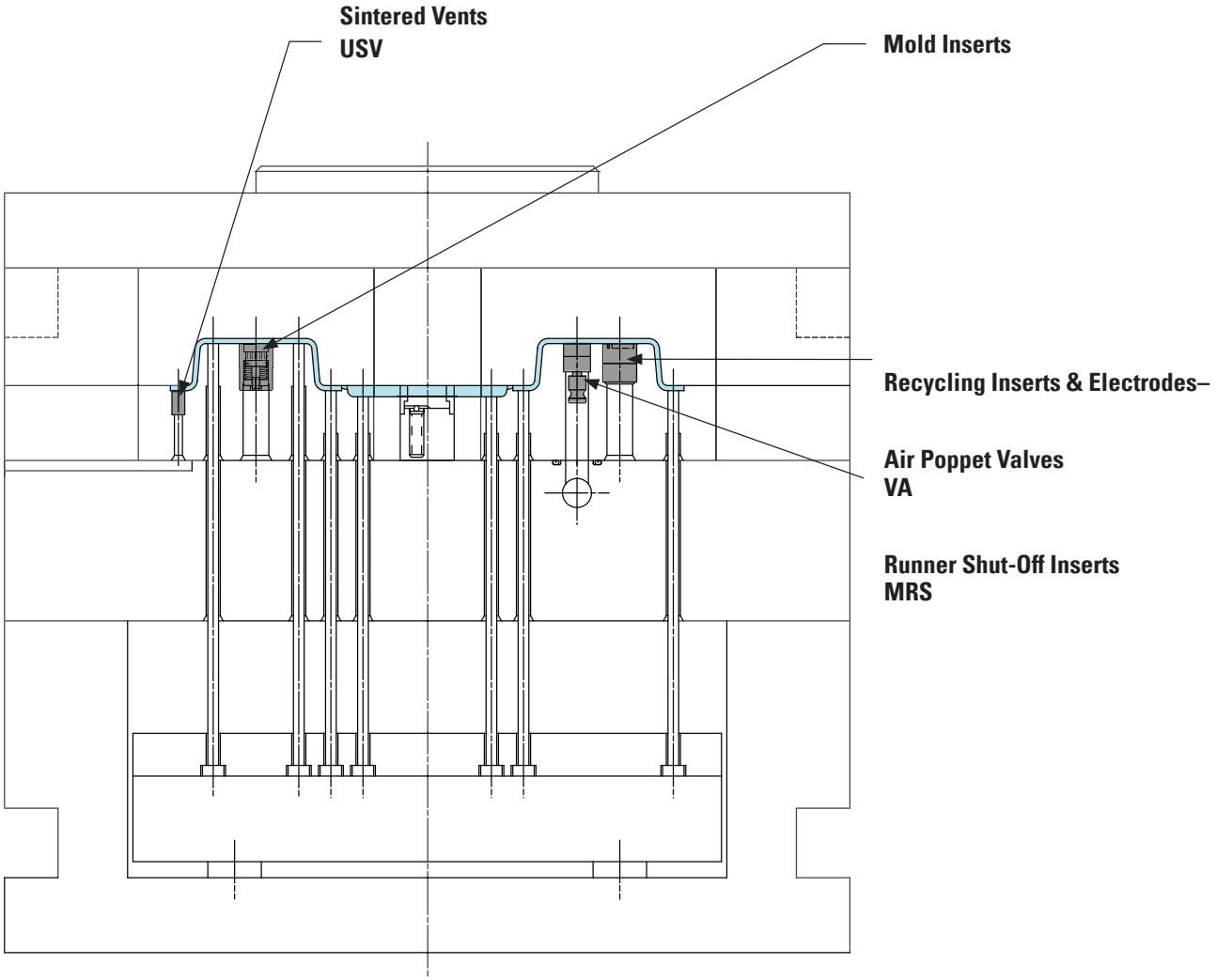

MOLD INSERTS

INDEXABLE & FRONT REMOVABLE DIMENSIONS, TOLERANCES AND REPLACEMENT SPRINGS 206-207
HI-TEMPERATURE INSERTS 208-209
DUAL-RING INSERTS 210
BLIND-HOLE APP INSERTS 211
CUMSA LONG STYLE INSERTS 212
QR CODE INSERTS 216
RESIN IDENTIFIERS 218
FOOD & CONTAINER IDENTIFIERS 219
INSERT SPACERS 219
RECYCLING INSERTS 221
RECYCLING ELECTRODES 215
REMOTE INSERTS 214

SINTERED VENTS

FOR PLASTICS INJECTION MOLDING 222
FOR GRAVITY AND LOW-PRESSURE DIE CASTING 223
VORTEX CORE PINS & PLUGS 224

AIR POPPET VALVES

APPLICATION INFORMATION 225
INSTALLATION AND OPERATING INFORMATION 226

RUNNER SHUT-OFF INSERTS

INSERT AND APPLICATION INFORMATION 227
INSTALLATION, MACHINING AND OPERATING INFORMATION 227
TUNNEL GATE INSERTS 229

CAVITY AND CORE COMPONENTS

Indexable and Front Removable Mold Dating Inserts

Indexable Inserts

U.S. Patent No. 5,788,872

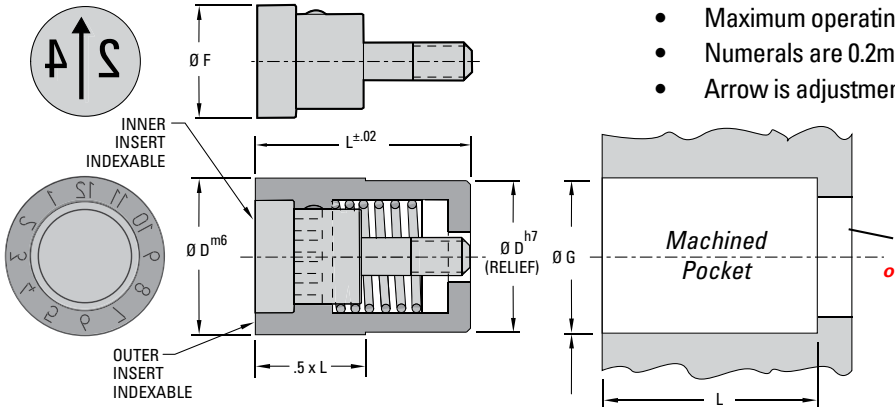

NOTE: Indexable springs are built in.

Features of Indexable and Front Removable Inserts

- Designed for plastics injection molds
- Maximum operating temperature is 150°C (300°F)
- Numerals are 0.2mm deep and arrow is 0.4mm deep
- Arrow is adjustment slot
- Relief on bottom of insert will align insert into hole.
- An aluminum rod should be placed against the face of the insert with the rod larger in diameter than the Outer Insert. The aluminum rod should be tapped with a hammer to move the insert to its flush position.
- Inner insert must be flush or below flush during installation.

Front Removable Inserts

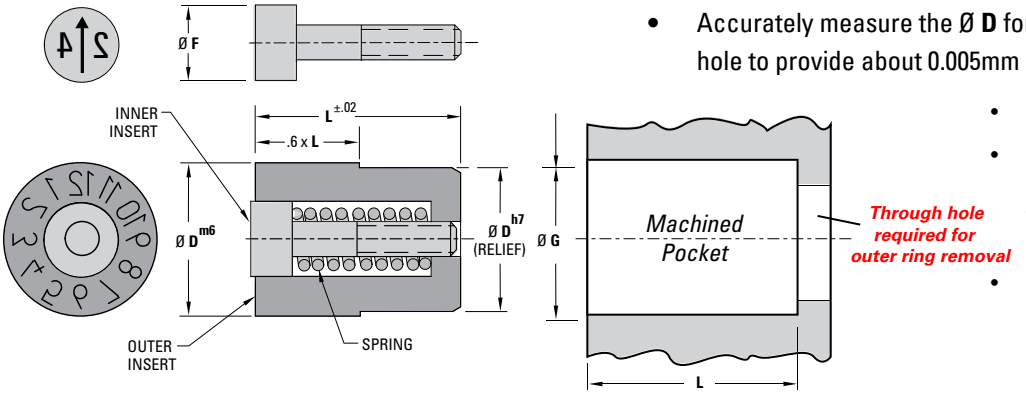

Installation and Machining for Both Insert Styles

- Press-fit installation required
- Maintain a close tolerance press fit. Too loose a fit could allow the insert to move out of position, while too tight a press fit might prevent the inner insert from rotating when required
- Accurately measure the Ø **D** for each part and machine Ø **G** hole to provide about 0.005mm (.0002") press fit
- Relief on bottom of insert will align insert into hole.
- An aluminum rod should be placed against the face of the insert with the rod larger in diameter than the Outer Insert. The aluminum rod should be tapped with a hammer to move the insert to its flush position.
- Inner insert must be flush or below flush during installation.

INFORMATION KEY:

D = Outside Diameter of Outer Insert
F = Outside Diameter of Inner Insert
G = Hole Diameter
L = Length
Material: Stainless Steel
Hardness: 50-55 HRC
Max. Temp: 150°C (300°F)
Dimensions: All dimensions are in mm, except as noted

Dimensions and Tolerances of Indexable and Front Removable Inserts

Ø D	TOLERANCE		L	Ø F INDEXABLE INDEX	Ø F FRONT REMOVABLE
	m6	h7			
4	+0.012 TO +0.004	0 TO -0.012	8	2.4	—
6	+0.012 TO +0.004	0 TO -0.012	8	3.7	3.1
8	+0.015 TO +0.006	0 TO -0.015	10	5.0	4.4
10	+0.015 TO +0.006	0 TO -0.015	12	6.3	5.2
12	+0.018 TO +0.007	0 TO -0.018	14	7.5	6.2
16	+0.018 TO +0.007	0 TO -0.018	14	11.0	8.2
20	+0.021 TO +0.008	0 TO -0.021	16	13.2	11

All dimensions and tolerances are in millimeters (mm).



Front Removable Springs

ITEM NUMBER (PACKAGE OF 5)	Ø D
DFQ9006	6
DFQ9008	8
DFQ9010	10
DFQ9012	12
DFQ9016	16
DFQ9020	20

NOTE: Springs are for Front Removable Inserts only.

CAVITY AND CORE COMPONENTS

Mold Dating Inserts – Ordering Information

Complete Assemblies

DESCRIPTION	Ø D (mm)	ITEM NUMBER INDEXABLE	ITEM NUMBER FRONT REMOVABLE
 Month (outer), Year and Arrow (inner)	4	UYM_*_04	—
	6	UYM_*_06	FYM_*_06
	8	UYM_*_08	FYM_*_08
	10	UYM_*_10	FYM_*_10
	12	UYM_*_12	FYM_*_12
	16	UYM_*_16	FYM_*_16
	20	UYM_*_20	FYM_*_20
 Month (outer), Arrow (inner)	4	UOM0004	—
	6	UOM0006	FOM0006
	8	UOM0008	FOM0008
	10	UOM0010	FOM0010
	12	UOM0012	FOM0012
	16	UOM0016	FOM0016
	20	UOM0020	FOM0020
Indexable Front Removable 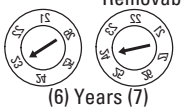 (6) Years (7) Years (outer), Arrows (inner)	4	UOY_*_04	—
	6	UOY_*_06	FOY_*_06
	8	UOY_*_08	FOY_*_08
	10	UOY_*_10	FOY_*_10
	12	UOY_*_12	FOY_*_12
	16	UOY_*_16	FOY_*_16
	20	UOY_*_20	FOY_*_20
 Day (outer), Arrow (inner)	12	—	FOD0012
	16	UOD0016	FOD0016
	20	UOD0020	FOD0020
 "Numerals" 0 thru 9 (outer) Arrow (inner)	4	UOR0004	—
	6	UOR0006	FOR0006
	8	UOR0008	FOR0008
	10	UOR0010	FOR0010
	12	UOR0012	FOR0012
	16	UOR0016	FOR0016
	20	UOR0020	FOR0020
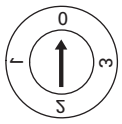 "Shift" (outer), Arrow (inner)	4	UOS0004	—
	6	UOS0006	FOS0006
	8	UOS0008	FOS0008
	10	UOS0010	FOS0010
	12	UOS0012	FOS0012
	16	UOS0016	FOS0016
	20	UOS0020	FOS0020
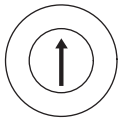 Blank (outer), Arrow (inner)	4	UOB0004	—
	6	UOB0006	FOB0006
	8	UOB0008	FOB0008
	10	UOB0010	FOB0010
	12	UOB0012	FOB0012
	16	UOB0016	FOB0016
	20	UOB0020	FOB0020

NOTES:

1. When ordering date-sensitive assemblies, add digits of engraved year requested where asterisks (*) are shown in item number (e.g., UUY2216).
2. Availability of year-sensitive items will vary during last quarter of each calendar year. Order next year's Mold Dating Inserts during October to beat the rush.

Inner Inserts

DESCRIPTION	OUTER RING Ø D (MM)	ITEM NUMBER INDEXABLE	ITEM NUMBER FRONT REMOVABLE
 Year and Arrow	4	YUU_*_04	—
	6	YUU_*_06	YON_*_06
	8	YUU_*_08	YON_*_08
	10	YUU_*_10	YON_*_10
	12	YUU_*_12	YON_*_12
	16	YUU_*_16	YON_*_16
	20	YUU_*_20	YON_*_20
 Arrow	4	OUU0004	—
	6	OUU0006	OON0006
	8	OUU0008	OON0008
	10	OUU0010	OON0010
	12	OUU0012	OON0012
	16	OUU0016	OON0016
	20	OUU0020	OON0020

Outer Inserts

DESCRIPTION	Ø D (mm)	ITEM NUMBER INDEXABLE	ITEM NUMBER FRONT REMOVABLE
 Month (1 thru 12)	4	UUM0004	—
	6	UUM0006	OOM0006
	8	UUM0008	OOM0008
	10	UUM0010	OOM0010
	12	UUM0012	OOM0012
	16	UUM0016	OOM0016
	20	UUM0020	OOM0020
Indexable Front Removable  (6) Years (7)	4	UUY_*_04	—
	6	UUY_*_06	OOY_*_06
	8	UUY_*_08	OOY_*_08
	10	UUY_*_10	OOY_*_10
	12	UUY_*_12	OOY_*_12
	16	UUY_*_16	OOY_*_16
	20	UUY_*_20	OOY_*_20
 Day (1 thru 31)	12	—	OOD0012
	16	UUD0016	OOD0016
	20	UUD0020	OOD0020
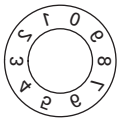 "Numerals" (0 thru 9)	4	UUR0004	—
	6	UUR0006	OOR0006
	8	UUR0008	OOR0008
	10	UUR0010	OOR0010
	12	UUR0012	OOR0012
	16	UUR0016	OOR0016
	20	UUR0020	OOR0020
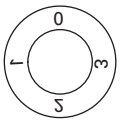 "Shift" (0 thru 3)	4	UUS0004	—
	6	UUS0006	OOS0006
	8	UUS0008	OOS0008
	10	UUS0010	OOS0010
	12	UUS0012	OOS0012
	16	UUS0016	OOS0016
	20	UUS0020	OOS0020
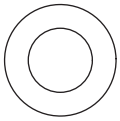 Blank	4	UUB0004	—
	6	UUB0006	OOB0006
	8	UUB0008	OOB0008
	10	UUB0010	OOB0010
	12	UUB0012	OOB0012
	16	UUB0016	OOB0016
	20	UUB0020	OOB0020

CAVITY AND CORE COMPONENTS

Mold Dating Inserts Hi-Temperature/Blind Hole

Features of Hi-Temperature Mold Date Inserts

- Withstands temperatures up to 644°F (340°C)
- Designed to be easily removed from cavity plate with a metric screw, no need for a thru-hole
- Newly engineered inner insert is removed with less rotations due to shorter threads
- Inner inserts use ball detents to click into position



Dimensions and Tolerances of High-Temperature Inserts

OUTER INSERT

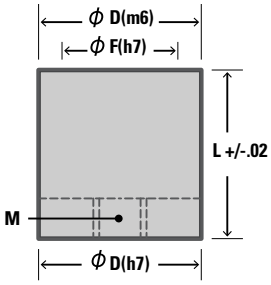

INNER INSERT

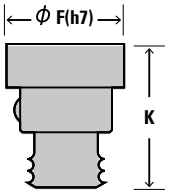

Material: Stainless Steel
Hardness: 50-55 HRC
Max. Temp: 340°C (644°F)
Dimensions: All dimensions are in mm, except as noted

Hi-Temp Blind Hole Inserts

OUTER INSERT				INNER INSERT		TOLERANCES	
Ø D (m6)	Ø F (h7)	L	M	Ø F (h7)	K	m6	h7
4	2.6	8	M1.8	2.6	5.5	+0.012 TO +0.004	0 TO -0.012
6	4	8	M2.5	4	5.5	+0.012 TO +0.004	0 TO -0.012
8	5.0	10	M3	5.0	7.1	+0.015 TO +0.006	0 TO -0.015
10	6.3	12	M3	6.3	8.8	+0.015 TO +0.006	0 TO -0.015
12	7.5	14	M4	7.5	9.8	+0.018 TO +0.007	0 TO -0.018
16	11.0	14	M5	11.0	9.8	+0.018 TO +0.007	0 TO -0.018
20	13.2	16	M5	13.2	11.8	+0.021 TO +0.008	0 TO -0.021

Removing Hi-Temperature Inserts

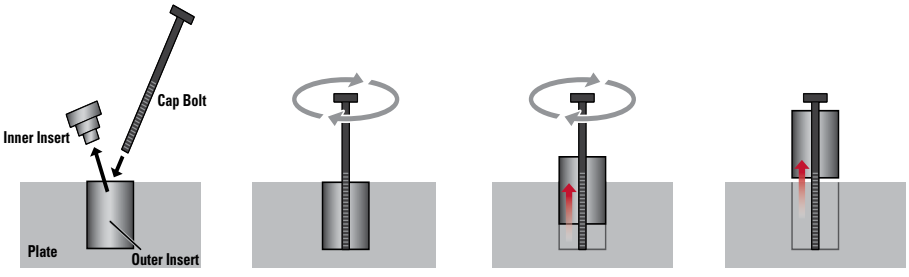

Remove the inside insert. Insert cap bolt into outer insert hole.

Turn the cap bolt clockwise into the outer inserts under threads.

Continue turning the cap bolt clockwise raising the outer insert up from the plate.

Remove the outer insert from the plate when it has cleared the hole.

CAVITY AND CORE COMPONENTS

Mold Dating Inserts Hi-Temperature Hole/Blind Hole

Complete Assemblies

DESCRIPTION	Ø D (mm)	ITEM NUMBER
 Month (outer), Year and Arrow (inner)	4	HTYM_*_04
	6	HTYM_*_06
	8	HTYM_*_08
	10	HTYM_*_10
	12	HTYM_*_12
	16	HTYM_*_16
	20	HTYM_*_20
 Month (outer), Arrow (inner)	4	HTOM0004
	6	HTOM0006
	8	HTOM0008
	10	HTOM0010
	12	HTOM0012
	16	HTOM0016
	20	HTOM0020
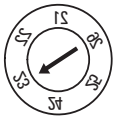 (6) Years (outer), Arrows (inner)	4	HTOY_*_04
	6	HTOY_*_06
	8	HTOY_*_08
	10	HTOY_*_10
	12	HTOY_*_12
	16	HTOY_*_16
	20	HTOY_*_20
 Day (outer), Arrow (inner)	12	—
	16	HTOD0016
	20	HTOD0020
 "Numerals"0 thru 9 (outer) Arrow (inner)	4	HTOR0004
	6	HTOR0006
	8	HTOR0008
	10	HTOR0010
	12	HTOR0012
	16	HTOR0016
	20	HTOR0020
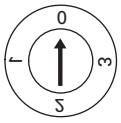 "Shift" (outer), Arrow (inner)	4	HTOS0004
	6	HTOS0006
	8	HTOS0008
	10	HTOS0010
	12	HTOS0012
	16	HTOS0016
	20	HTOS0020
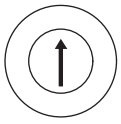 Blank (outer), Arrow (inner)	4	HTOB0004
	6	HTOB0006
	8	HTOB0008
	10	HTOB0010
	12	HTOB0012
	16	HTOB0016
	20	HTOB0020

NOTES:

1. When ordering date-sensitive assemblies, add digits of engraved year requested where asterisks (*) are shown in item number (e.g., UUY2216).
2. Availability of year-sensitive items will vary during last quarter of each calendar year. Order next year's Mold Dating Inserts during October to beat the rush.

Inner Inserts

DESCRIPTION	OUTER RING Ø D (MM)	ITEM NUMBER
 Year and Arrow	4	HTYA_*_04
	6	HTYA_*_06
	8	HTYA_*_08
	10	HTYA_*_10
	12	HTYA_*_12
	16	HTYA_*_16
	20	HTYA_*_20
 Arrow	4	HTIA0004
	6	HTIA0006
	8	HTIA0008
	10	HTIA0010
	12	HTIA0012
	16	HTIA0016
	20	HTIA0020

Outer Inserts

DESCRIPTION	Ø D (mm)	ITEM NUMBER
 Month (1 thru 12)	4	HTUM0004
	6	HTUM0006
	8	HTUM0008
	10	HTUM0010
	12	HTUM0012
	16	HTUM0016
	20	HTMU0020
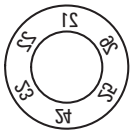 (6) Years	4	HTUY_*_04
	6	HTUY_*_06
	8	HTUY_*_08
	10	HTUY_*_10
	12	HTUY_*_12
	16	HTUY_*_16
	20	HTUY_*_20
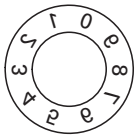 "Numerals" (0 thru 9)	4	HTUR0004
	6	HTUR0006
	8	HTUR0008
	10	HTUR0010
	12	HTUR0012
	16	HTUR0016
	20	HTUR0020
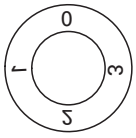 "Shift" (0 thru 3)	4	HTUS0004
	6	HTUS0006
	8	HTUS0008
	10	HTUS0010
	12	HTUS0012
	16	HTUS0016
	20	HTUS0020
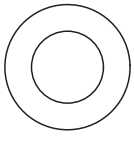 Blank	4	HTUB0004
	6	HTUB0006
	8	HTUB0008
	10	HTUB0010
	12	HTUB0012
	16	HTUB0016
	20	HTUB0020
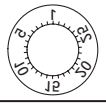 Day	16	HTUD0016
	20	HTUD0020

CAVITY AND CORE COMPONENTS

Dual-Ring Mold Dating Insert

Dual-Ring Mold Dating Insert Offers the Ultimate in Date Insert Flexibility

Patented Indexable Mold Date Insert Technology

The Dual-Ring Mold Dating Insert from DME features a date insert valid for six years and is based on Indexable Mold Date Insert technology.

The Dual-Ring Insert eliminates the need to install two date inserts or change the inner insert each year. This easy-to-use indexable insert provides the flexibility you need to keep your mold dating current, especially as the lifetime of molds becomes shorter.

- Outer ring: 12 months, months 1 through 12
- Inner ring: 6 years + arrow (arrow points to month)
- Center insert: arrow (points to year & adjusts position of both arrows)

Features and Benefits

- Double indexable: both arrows independently "click into position"
- Change positions easily with only a screwdriver using arrow in inner insert
  - Turn clockwise to change "year" arrow (6 years)
  - Turn counter-clockwise to change "month" arrow (12 months)
- All inserts remain flush when rotated
- Dual-Ring Inserts may be interchanged for the 20mm, 16mm, 10mm, 8mm to 6mm diameter Indexable and Front Removable inserts



Patent Pending

Installation and Machining

- Press-fit installation required
- Maintain a close tolerance press fit. Too loose a fit could allow the insert to move out of position, while too tight a press fit might prevent the inner insert and inner ring from rotating when required
- Accurately measure the Ø **D** for each part and machine hole to provide about 0.005mm (.0002") press fit

Pocket for installation
(hold pocket depth as required by the application)

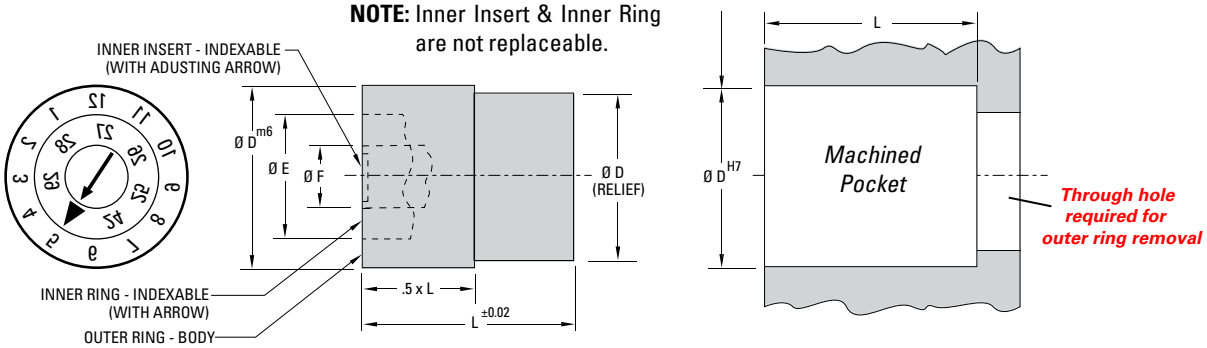

NOTE: Inner Insert & Inner Ring are not replaceable.

Ø D	TOLERANCE	
	m6	h7
6	+0.004 TO +0.012	0.000 TO -0.012
8	+0.006 TO +0.015	0.000 TO -0.015
10	+0.006 TO +0.015	0.000 TO -0.015
16	+0.007 TO +0.018	0.000 TO -0.018
20	+0.008 TO +0.021	0.000 TO -0.021

INFORMATION KEY:

D = Outside Diameter
E = Outside Diameter of Inner Ring
F = Outside Diameter of Inner Insert
G = Hole Diameter
L = Length
Material: Corrosion-resistant Stainless Steel
Hardness: 53 ± 3 HRC
Max. Temp: 150°C (300°F)
Dimensions: All dimensions are in mm, except as noted

Dual-Ring Mold Dating Insert – MD Dimensions and Assembly

ITEM NUMBER	Ø D	Ø E	Ø F	L LENGTH
MD 20 20_*_	20	12.8	6.2	16
MD 16 20_*_	16	10.6	5	14
MD 10 20_*_	10	6.4	3.2	12
MD 08 20_*_	8	5.3	2.5	10
MD 06 20_*_	6	3.8	1.8	10

* When ordering, add digits of engraved year required where asterisks (_*_) are shown in item number (e.g., MD 06 20_*_: MD 06 2022; MD 10 20_*_: MD 10 2022).

CAVITY AND CORE COMPONENTS

Mold Dating Inserts Blind-Hole Applications

- Patented mold date insert design
- Installs with insert's captured screw in to the mold plate
- Thru hole not necessary for removal
- Changes and maintenance done with mold in the press
- Available in 6mm, 10mm and 16mm diameters (others via special order)
- Compatible with standard Indexable DME inner inserts

Complete Assemblies

DESCRIPTION	Ø D (mm)	ITEM NUMBER
Month / Year / Arrow	6	UYM_*_06S
	10	UYM_*_10S
	16	UYM_*_16S
Month / Arrow	6	UOM0006S
	10	UOM0010S
	16	UOM0016S
(6) Years	6	UOY_*_06S
	10	UOY_*_10S
	16	UOY_*_16S
0 thru 9 / Arrow	6	UOR0006S
	10	UOR0010S
	16	UOR0016S
"Shift" / Arrow	6	UOS0006S
	10	UOS0010S
	16	UOS0016S
Blank / Arrow	6	UOB0006S
	10	UOB0010S
	16	UOB0016S
Day / Arrow	16	UOD0016S

Indexable Inner Inserts

DESCRIPTION	Ø D (mm)	ITEM NUMBER
Year and Arrow	6	YUU_*_06
	10	YUU_*_10
	16	YUU_*_16
Arrow	6	OUU0006
	10	OUU0010
	16	OUU1106

Outer Inserts

DESCRIPTION	Ø D (mm)	ITEM NUMBER
Month (1 thru 12)	6	UUM0006S
	10	UUM0010S
	16	UUM0016S
(6) Years	6	UUY_*_06S
	10	UUY_*_10S
	16	UUY_*_16S
"Numerals" (0 thru 9)	6	UUR0006S
	10	UUR0010S
	16	UUR0016S
"Shift" (0 thru 3)	6	UUS0006S
	10	UUS0010S
	16	UUS0016S
Blank	6	UUB0006S
	10	UUB0010S
	16	UUB0016S
Day	16	UUD0016S

NOTES:

1. When ordering date-sensitive assemblies, add digits of engraved year requested where asterisks (*) are shown in item number (e.g., UUY2216).
2. Availability of year-sensitive items will vary during last quarter of each calendar year. Order next year's Mold Dating Inserts during October to beat the rush.

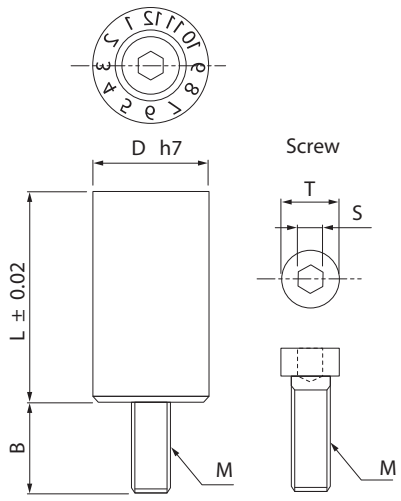

Indexable Date Insert with Screw Type Fastener

Date Inserts – Material: SUS420 Hardness: 50-53 HRC
Screw Part – Material: SCM435 Hardness: 32-39 HRC
Maximum operating temperature 150°C (300°F)

		Dia (mm)		
D h7	Date insert diameter	6mm	10mm	16mm
	Dia tolerance	0,-0.012mm	0,-0.015mm	0,-0.018mm
L	Length	11mm	15mm	18mm
B	Bolt length (screw L)	4.7mm	4.5mm	5.8mm
T	Bolt diameter	3mm	5mm	7.5mm
S	Hexagon wrench size	1.27mm	1.5mm	3mm
M	screw pitch size	M2 X P 0.4	M3 X P 0.5	M5 X P 0.8

CAVITY AND CORE COMPONENTS

Cumsa Long Style Mold Dating Insert

Fetaures & Benefits

- Inner insert always stays level with the outer ring
- Wide range of diameters available
- Requires only an H7 pocket to install
- Insert change requires no down time
- Internal mechanism ensures secure replacement of inserts



Complete Assemblies

	DESCRIPTION	Ø D (mm)	LENGTH (mm)	STANDARD ITEM NUMBER	BLIND HOLE ITEM NUMBER
	MONTH OUTER YEAR & ARROW INNER	4	12	FA042212_ _	FP042212_ _
		5	12	FA053012_ _	FP053012_ _
		6	20	FA063212_ _	FP063212_ _
		8	20	FA084712_ _	FP084712_ _
		10	20	FA105712_ _	FP105712_ _
		12	20	FA126712_ _	FP126712_ _
		16	20	FA168712_ _	FP168712_ _
		20	20	FA200712_ _	FP200712_ _
	MONTH OUTER ARROW INNER	4	12	FA0422SF	FP0422SF
		5	12	FA0530SF	FP0530SF
		6	20	FA0632SF	FP0632SF
		8	20	FA0847SF	FP0847SF
		10	20	FA1057SF	FP1057SF
		12	20	FA1267SF	FP1267SF
		16	20	FA1687SF	FP1687SF
		20	20	FA2007SF	FP2007SF
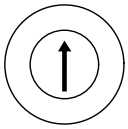	BLANK OUTER ARROW INNER	4	12	FA042200	FP042200
		5	12	FA053000	FP053000
		6	20	FA063200	FP063200
		8	20	FA084700	FP084700
		10	20	FA105700	FP105700
		12	20	FA126700	FP126700
		16	20	FA168700	FP168700
		20	20	FA200700	FP200700
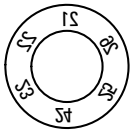 *6 Years Shown*	4 YEARS OUTER ARROW INNER	4	12	FA042204_ _	FP042204_ _
		5	12	FA053004_ _	FP053004_ _
	5 YEARS OUTER ARROW INNER	6	20	FA063205_ _	FP063205_ _
		8	20	FA084705_ _	FP084705_ _
	6 YEARS OUTER ARROW INNER	10	20	FA105706_ _	FP105706_ _
	8 YEARS OUTER ARROW INNER	12	20	FA126708_ _	FP126708_ _
	10 YEARS OUTER ARROW INNER	16	20	FA168710_ _	FP168710_ _
		20	20	FA200710_ _	FP200710_ _

NOTES:

1. When ordering date-sensitive assemblies, add digits of engraved year requested where the lines (_) are shown in item number (e.g., FA04221221).
2. Availability of year-sensitive items will vary during last quarter of each calendar year. Order next year's Mold Dating Inserts during October to beat the rush.

CUMSA Inserts

	DESCRIPTION	Ø D (mm)	LENGTH (mm)	ITEM NUMBERS
	INNER ONLY YEAR & ARROW	2.2	7.7	IA2275_ _
		3		IA3075_ _
		3.2	17	IA3217_ _
		4.7		IA4717_ _
		5.7		IA5717_ _
		6.7		IA6717_ _
		8.7		IA8717_ _
		10.7		IA1007_ _
	INNER ONLY ARROW	2.2	7.7	IA2275SF
		3		IA3075SF
		3.2	17	IA3217SF
		4.7		IA4717SF
		5.7		IA5717SF
		6.7		IA6717SF
		8.7		IA8717SF
		10.7		IA1007SF

Material: SAE 420 series/INOX 1.4034
Hardness: 51 +/- 3 HRC
Maximum working Temp 150°C (302°F)



ITEM NUMBER	DESCRIPTION
EF322405SET	Insert Removal Kit - Kit contains 1 handle and 8 tips

CAVITY AND CORE COMPONENTS

Cumsa Long Style Mold Dating Insert

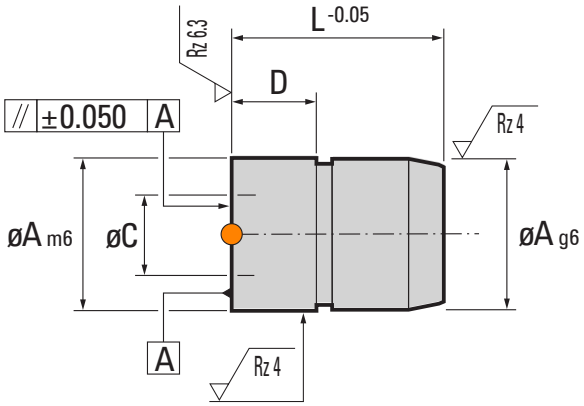

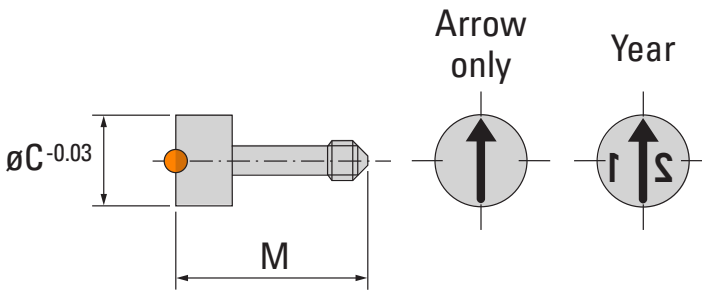

A	C	D	E	L	M
4	2.2	6	3.5	12	7.7
5	3	6	3.5	12	7.7
6	3.2	12	4	20	17
8	4.7	12	6	20	
10	5.7	12	8	20	
12	8.7	12	10	20	
16	8.7	12	12	20	
20	10.7	12	14	20	



Installation & Removal of FA Style Inserts

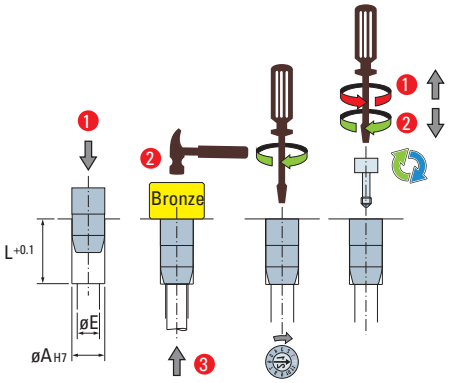

Installation & Removal of FP Style Inserts

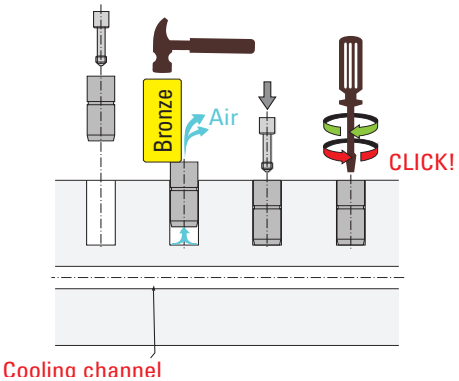

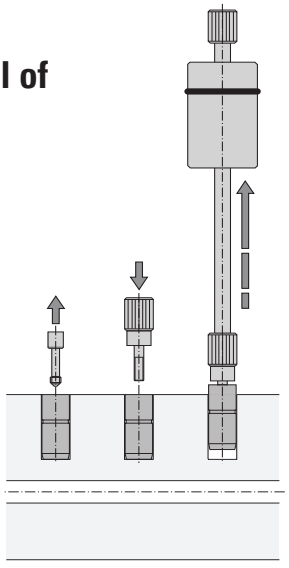

CUMSA

CAVITY AND CORE COMPONENTS

Remote Inserts



Avoid lost production time with DME's external traceability system. This system allows the operator to change the data points from the outside of the mold saving valuable production time. Our traceability system consists of a control box for each insert that is mounted on the outside of the mold allowing for on the fly changes to insert. These control boxes drive a cable directly to the insert providing a reliable and consistently method to change the data points in the quickest possible manor.

Features & Benefits

- External visibility of date stamp setting
- Eliminates possible scratches to the cavity during stamp updating
- Included nut allows easy height adjustment to get the perfect visual appearance on the part

Max Temp 150°C

	DESC	DIA.	LENGTH	ITEM NUMBER	LETTERING TYPE
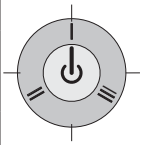	3 Shifts	8	16 (+0.2)	FR08HR03	Raised
		12		FR12HR03	Raised
		16		FR16HR03	Raised
		8		FR08LR03	Recessed
		12		FR12LR03	Recessed
		16		FR16LR03	Recessed
	31 Days	8		FR08HR31	Raised
		12		FR12HR31	Raised
		16		FR16HR31	Raised
		8		FR08LR31	Recessed
		12		FR12LR31	Recessed
		16		FR16LR31	Recessed
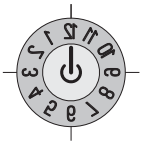	12 Months	8		FR08HR12	Raised
		12		FR12HR12	Raised
		16		FR16HR12	Raised
		8		FR08LR12	Recessed
		12		FR12LR12	Recessed
		16		FR16LR12	Recessed
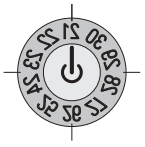	10 Years	8		FR08HR10_ _	Raised
		12		FR12HR10_ _	Raised
		16		FR16HR10_ _	Raised
		8		FR08LR10_ _	Recessed
		12		FR12LR10_ _	Recessed
		16		FR16LR10_ _	Recessed

Insert current year (_ _)

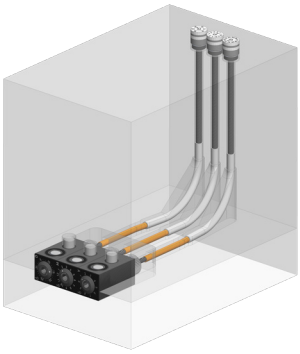

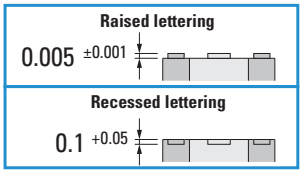

CAVITY AND CORE COMPONENTS

Remote Inserts

Remote Date Insert Shaft Set

ITEM NO.	L	M	R	S	T	U	W
CF060600	600	500	25	30	40	45	40
CF060600	1200	1100	40	50	60	60	60

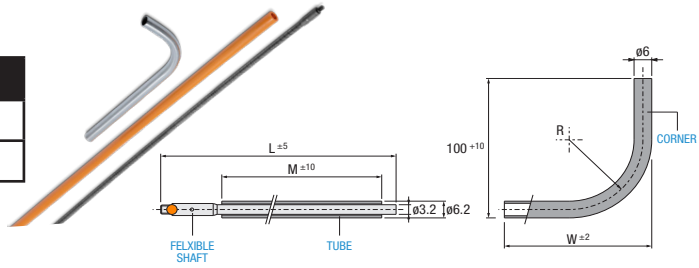

Remote Command

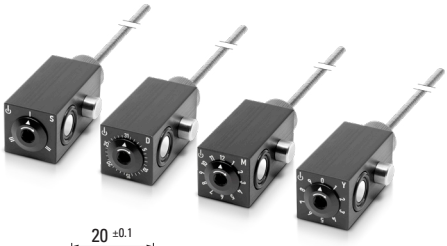

ITEM NO.	# OF POSITIONS
MN202003	3 (Shifts)
MN202010	10 (Years)
MN202012	12 (Months)
MN202031	31 (Days)

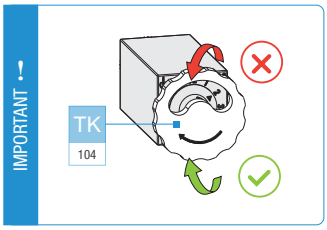

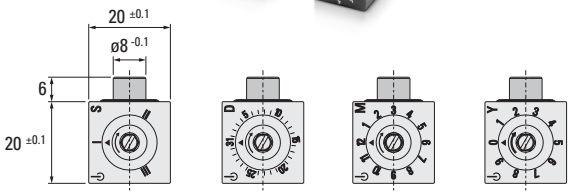

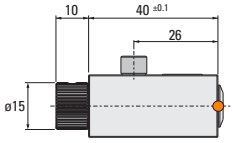

Turning Key



ITEM NO.	DESCRIPTION
TK412903	Turning Key & Support

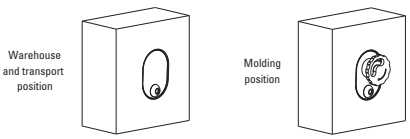

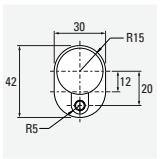

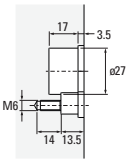

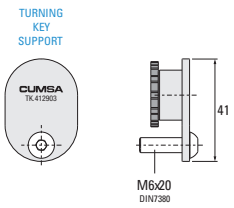

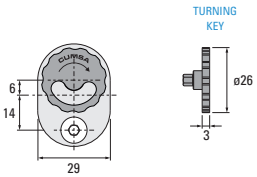

Shaft Cutting Jig

ITEM NO.	DESCRIPTION
CT601212	Shaft Cutting Jig

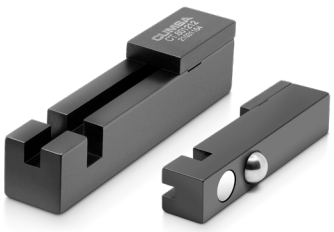

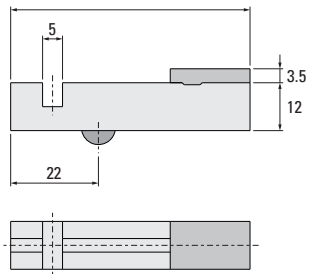

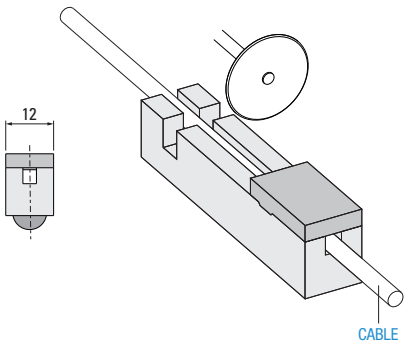

CAVITY AND CORE COMPONENTS

QR Code Insert



INJECTION PROCESS

QR CODE Insert



CONNECT

ADD DIGITAL CONNECTIVITY DIRECTLY TO YOUR PRODUCT

DME's NEW QR Code Insert is a game changer.
The two-dimensional QR code is customized to your unique code, allowing your customer access to your very latest product information via smart phone or other smart devices.

For the first time, QR codes can be added to the product during the molding process without making it part of the mold. Advantages of the new DME QR Code Insert:

1. Discrete, Permanently Affixed, Won't Wear Off
2. Easy To Use Marking/Tracking Option
3. Cost-Effective; Requiring No Secondary Operations
4. Inserts Can Be Easily Replaced And Updated

CUSTOM MADE TO ORDER		
20mm	16mm	10mm



20 (m6) **16 (m6)** **10 (m6)**

QR Code Insert Size Options
(to scale)

Quote Requirements: (1) Desired Insert Dia (2) URL or Data to be engraved (3) Quantity of inserts

	10mm	16mm	20mm
Max. numeric capacity	36	63	202
Max. alphanumeric capacity	25	38	122
Max. binary capacity	16	26	84

INSTALL QR INSERT IN THE MOLD & THE 2D CODE IS FORMED DURING INJECTION

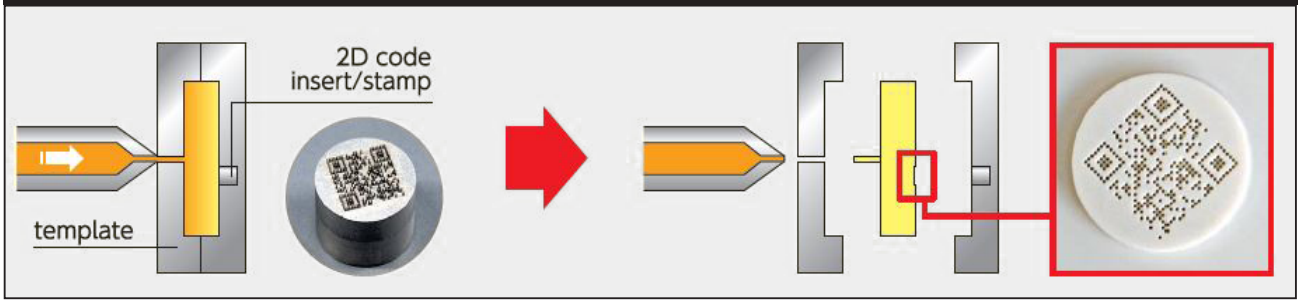

Available support from test marking to test scanning.

CAVITY AND CORE COMPONENTS

QR Code Insert

A MARKETING & OPERATIONS DREAM TOOL

The new DME QR Code Insert allows OEM's to reap all the benefits of traceability and consumer connectivity. Adding a QR code to a product isn't a new concept, but up until now it could only be printed on the product or disposable item such as support material. Today there is a new and better solution. With the NEW DME QR Insert you can now add a QR code directly to a product itself, in a way that won't be removable or wear off. The NEW DME QR Insert has unlimited possibilities to provide your customer more information about your product, options for re-order, documentation, and optional accessories. QR codes can be used for many things, but often are set as online destinations or content. You can tailor a video, custom marketing or informational message to your customers by sending them to online information that you control. Unlike printed materials, online content can be edited and updated as needed to maximize the effectiveness of the content. Build your email list by routing your customers to a sign-up page or potentially reduce liability by giving them instructional information and/or warnings. The possibilities are endless - all from one little insert!

Advantages of Connecting:

- Quick, error-free link to your online content.
- Engage the customer with videos and other updated information.
- Provide a link to promotions and interactive sites to obtain Voice of the Customer (VOC) information.
- Smart phones and tablets have easy access to QR reading apps across all platforms.



CAVITY AND CORE COMPONENTS

Resin Identifiers

Features of Resin Identifiers

- Solid triangle Resin Identifiers
- Designed to conform with ASTM International Designation D7611/D7611M-13
- Maximum operating temperature is 150°C (300°F)
- Easily interchangeable

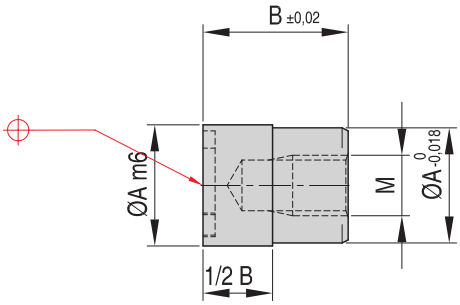



Material: Stainless Steel
Hardness: 48-52 HRC
Max. Temp: 150°C (300°F)

Resin Identifiers

RESIN	A	B	M	ITEM NUMBER	RESIN IDENTIFICATION CODE - OPTION A	ITEM NUMBER	RESIN IDENTIFICATION CODE - OPTION B
POLY (ETHYLENE TEREPHTHALATE)	10	12	5	RIC0101A	1 PETE	RIC0101B	01 PET
	16	14	6	RIC0201A		RIC0201B	
	20	16	6	RIC0301A		RIC0301B	
HIGH DENSITY POLYETHYLENE	10	12	5	RIC0102A	2 HDPE	RIC0102B	02 PE-HD
	16	14	6	RIC0202A		RIC0202B	
	20	16	6	RIC0302A		RIC0302B	
POLY (VINYL CHLORIDE)	10	12	5	RIC0103A	3 V	RIC0103B	03 PVC
	16	14	6	RIC0203A		RIC0203B	
	20	16	6	RIC0303A		RIC0303B	
LOW DENSITY POLYETHYLENE	10	12	5	RIC0104A	4 LDPE	RIC0104B	04 PE-LD
	16	14	6	RIC0204A		RIC0204B	
	20	16	6	RIC0304A		RIC0304B	
POLYPROPYLENE	10	12	5	RIC0105A	5 PP	RIC0105B	05 PP
	16	14	6	RIC0205A		RIC0205B	
	20	16	6	RIC0305A		RIC0305B	
POLYSTYRENE	10	12	5	RIC0106A	6 PS	RIC0106B	06 PS
	16	14	6	RIC0206A		RIC0206B	
	20	16	6	RIC0306A		RIC0306B	
OTHER RESINS	10	12	5	RIC0107A	7 OTHER	RIC0107B	07 O
	16	14	6	RIC0207A		RIC0207B	
	20	16	6	RIC0307A		RIC0307B	

CAVITY AND CORE COMPONENTS

Food and Container Identifiers

Features

- Save on outsourcing and engraving costs
- Easily installed and interchangeable
- Specials quoted upon request

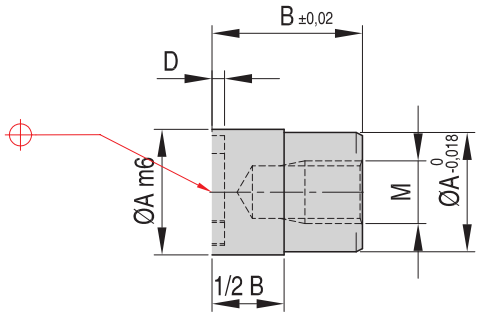



Food & Container

	REF	A	B	D	M	Identification
	MRI1010	10	12	0.3	M5	Food
	MRI1016	16	14		M6	
	MRI1020	20	16		M6	
	MRI1210	10	12	0.3	M5	Top Rack Dishwasher
	MRI1216	16	14		M6	
	MRI1220	20	16		M6	
	MRI1310	10	12	0.3	M5	Dishwasher Safe
	MRI1316	16	14		M6	
	MRI1320	20	16		M6	
	MRI1410	10	12	0.3	M5	Microwave Safe
	MRI1416	16	14		M6	
	MRI1420	20	16		M6	
	MRI1510	10	12	0.3	M5	Freezer Safe
	MRI1516	16	14		M6	
	MRI1520	20	16		M6	

Material: Stainless Steel
Hardness: 48-52 HRC
Max. Temp: 150°C (300°F)

Insert Spacers

Insert spacers from DME allow you to change to a shorter insert quickly and easily. Simply install the spacer in the existing hole and then install your insert right on top. The spacer is made to the exact specifications to make it just that easy.

Insert Spacers

ITEM NUMBER	Ø D (MM)	L
DSF0404	4	4
DSF0612	6	12
DSF0810	8	10
DSF1008	10	8
DSF1206	12	6
DSF1606	16	6
DSF2004	20	4

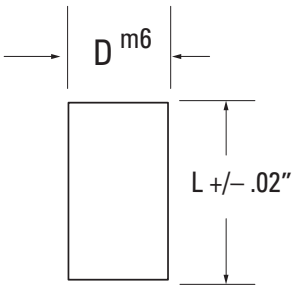



Material: Stainless Steel
Hardness: 50-55 HRC
Max. Temp: 150°C (300°F)

CAVITY AND CORE COMPONENTS

Recycling Inserts

Features

- Saves outsourcing and engraving costs
- Easily installed and interchangable
- Complies with SPI standards



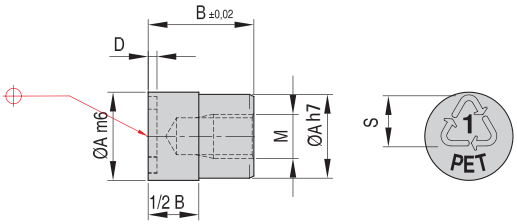

Recycling Inserts (METRIC) – MRI

	REF	A	B	D	M	S	Identification	
	MRI0100	10	12		M5	6		
	MRI0200	16	14	0.3	M6	10	Arrows Only	
	MRI0300	20	16		M6	12		
	MRI1101 not hardened	10	12		M5	6		
	MRI2202 not hardened	16	14	0.3	M6	10	Blank	
	MRI3303 not hardened	20	16		M6	12		
1 PET	MRI0101GE	10	12		M5	6		
	MRI0201GE	16	14	0.3	M6	10	PolyethyleneTerephthalate	PET
	MRI0301GE	20	16		M6	12		
1 PETE	MRI0101	10	12		M5	6		
	MRI0201	16	14	0.3	M6	10	PolyethyleneTerephthalate	PETE
	MRI0301	20	16		M6	12		
2 HDPE	MRI0102	10	12		M5	6		
	MRI0202	16	14	0.3	M6	10	High density Polyethylene	HDPE
	MRI0302	20	16		M6	12		
2 PE-HD	MRI0102GE	10	12		M5	6		
	MRI0202GE	16	14	0.3	M6	10	High density Polyethylene	PE-HD
	MRI0302GE	20	16		M6	12		
3 PVC	MRI0103GE	10	12		M5	6		
	MRI0203GE	16	14	0.3	M6	10	Polyvinyl Chloride	PVC
	MRI0303GE	20	16		M6	12		
3 V	MRI0103	10	12		M5	6		
	MRI0203	16	14	0.3	M6	10	Vinyl	V
	MRI0303	20	16		M6	12		
4 LDPE	MRI0104	10	12		M5	6		
	MRI0204	16	14	0.3	M6	10	Low Density Polyethylene	LDPE
	MRI0304	20	16		M6	12		
4 PE-LD	MRI0104GE	10	12		M5	6		
	MRI0204GE	16	14	0.3	M6	10	Low Density Polyethylene	PE-LD
	MRI0304GE	20	16		M6	12		
4 PE-BD	MRI0104FR	10	12		M5	6		
	MRI0204FR	16	14	0.3	M6	10	Low Density Polyethylene	PE-BD
	MRI0304FR	20	16		M6	12		
5 PP	MRI0105	10	12		M5	6		
	MRI0205	16	14	0.3	M6	10	Polypropylene	PP
	MRI0305	20	16		M6	12		
6 PS	MRI0106	10	12		M5	6		
	MRI0206	16	14	0.3	M6	10	Polystyrene	PS
	MRI0306	20	16		M6	12		
7 OTHER	MRI0107	10	12		M5	6		
	MRI0207	16	14	0.3	M6	10	All other resins	Other
	MRI0307	20	16		M6	12		
7 0	MRI0107GE	10	12		M5	6		
	MRI0207GE	16	14	0.3	M6	10	All Other Resins	O
	MRI0307GE	20	16		M6	12		

Material: Stainless Steel
Hardness: 48-52 HRC
Max. Temp: 150°C (300°F)

CAVITY AND CORE COMPONENTS

Recycling Electrodes

Features

- Saves outsourcing and engraving costs
- No drilling required for installation
- Complies with SPI standards
- Material - Electrolitic Copper E-Cu



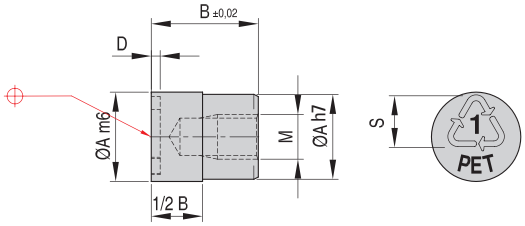

Recycling Electrodes (METRIC) – MRE

	REF	A	B	D	M	S	Identification	
	MRE0100	10	12	0.3	M5	6	Arrows Only	
	MRE0200	16	14		M6	10		
	MRE0300	20	16		M6	12		
	MRE1101 not hardened	10	12	0.3	M5	6	Blank	
	MRE2202 not hardened	16	14		M6	10		
	MRE3303 not hardened	20	16		M6	12		
1 PET	MRE0101GE	10	12	0.3	M5	6	Polyethylene Terephthalate	PET
	MRE0201GE	16	14		M6	10		
	MRE0301GE	20	16		M6	12		
1 PETE	MRE0101	10	12	0.3	M5	6	Polyethylene Terephthalate	PETE
	MRE0201	16	14		M6	10		
	MRE0301	20	16		M6	12		
2 HDPE	MRE0102	10	12	0.3	M5	6	High Density Polyethylene	HDPE
	MRE0202	16	14		M6	10		
	MRE0302	20	16		M6	12		
2 PE-HD	MRE0102GE	10	12	0.3	M5	6	High Density Polyethylene	PE-HD
	MRE0202GE	16	14		M6	10		
	MRE0302GE	20	16		M6	12		
3 PVC	MRE0103GE	10	12	0.3	M5	6	Polyvinyl Chloride	PVC
	MRE0203GE	16	14		M6	10		
	MRE0303GE	20	16		M6	12		
3 V	MRE0103	10	12	0.3	M5	6	Vinyl	V
	MRE0203	16	14		M6	10		
	MRE0303	20	16		M6	12		
4 LDPE	MRE0104	10	12	0.3	M5	6	Low Density Polyethylene	LDPE
	MRE0204	16	14		M6	10		
	MRE0304	20	16		M6	12		
4 PE-LD	MRE0104GE	10	12	0.3	M5	6	Low Density Polyethylene	PE-LD
	MRE0204GE	16	14		M6	10		
	MRE0304GE	20	16		M6	12		
4 PE-BD	MRE0104FR	10	12	0.3	M5	6	Low Density Polyethylene	PE-BD
	MRE0204FR	16	14		M6	10		
	MRE0304FR	20	16		M6	12		
5 PP	MRE0105	10	12	0.3	M5	6	Polypropylene	PP
	MRE0205	16	14		M6	10		
	MRE0305	20	16		M6	12		
6 PS	MRE0106	10	12	0.3	M5	6	Polystyrene	PS
	MRE0206	16	14		M6	10		
	MRE0306	20	16		M6	12		
7 OTHER	MRE0107	10	12	0.3	M5	6	All Other Resins	Other
	MRE0207	16	14		M6	10		
	MRE0307	20	16		M6	12		
7 0	MRE0107GE	10	12	0.3	M5	6	All Other Resins	0
	MRE0207GE	16	14		M6	10		
	MRE0307GE	20	16		M6	12		

NOTE: Additional material codes are available. Contact DME for quote.

CAVITY AND CORE COMPONENTS

Sintered Vents – For Plastics Injection Molding

Features and Benefits of Sintered Vents – USV

- Venting of air or gas reduces occurrence of short shots and burned parts
- Self-contained standardized vents save time in design, installation and maintenance
- Wide variety of off-the-shelf standard sizes available
- Fast and easy replacement or cleaning of sintered vents improves productivity
- Field tested to ensure product reliability

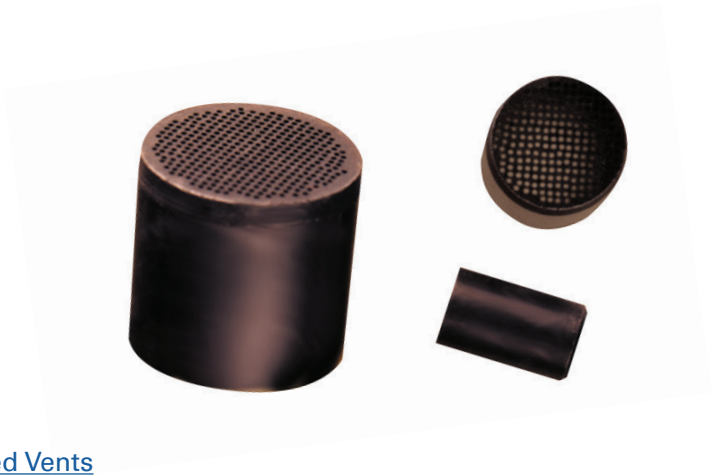

Sintered Vents

Sintered vents are a unique venting plug composed of a large number of straight, parallel and uniform pores made through a powdered metallurgy process. The pores allow trapped air or gas to escape from the mold cavity during the injection molding process, thereby reducing the occurrence of defective parts.

Application Recommendations

Plastics injection molding

A 0.03mm vent diameter should be used with polymers such as polyethylene or polypropylene. Use a vent with a pore diameter of 0.05mm for low-flow polymers such as polycarbonate, nylon, or ABS. When molding highly viscous material (very low-flow properties), use a vent with a 0.10mm pore diameter.

Stainless Steel sintered vents are recommended for plastic materials that are particularly gaseous or corrosive, such as PVC. Stainless Steel sintered vents are also recommended for plastic materials containing flame-retardants.

SINTERED VENTS FOR PLASTICS INJECTION MOLDING APPLICATIONS
VENT MATERIAL: STAINLESS STEEL

VENT TYPE	ITEM NUMBER	OUTSIDE Ø (mm)	FULL LENGTH (mm)	NO. OF PORES	PORE Ø (mm)	POROSITY % OF EFFECTIVE Ø	EFFECTIVE Ø (mm)	EFFECTIVE LENGTH (mm)
A	USV0035	2	10	280	0.03	25	1	10
	USV0036	3	10	630	0.03	25	1.5	10
	USV0038	2	10	250	0.05	25	1.7	10
	USV0039	3	10	400	0.05	25	2	10
	USV0040	4	10	400	0.05	25	2	10
B	USV0041	6	10	400	0.05	25	2	3
	USV0042	8	10	1600	0.05	25	4	3
	USV0043	10	10	3600	0.05	25	6	3
	USV0044	12	10	6400	0.05	25	8	3
	USV0045	15	10	10000	0.05	25	10	4
	USV0046	5	10	76	0.10	19	2	3
	USV0047	6	10	76	0.10	19	2	3
	USV0048	8	10	300	0.10	19	4	3
	USV0049	10	10	690	0.10	19	6	3
	USV0050	12	10	1200	0.10	19	8	3

SINTERED VENTS FOR PLASTICS INJECTION MOLDING APPLICATIONS
VENT MATERIAL: IRON ALLOY

VENT TYPE	ITEM NUMBER	OUTSIDE Ø (mm)	FULL LENGTH (mm)	NO. OF PORES	PORE Ø (mm)	POROSITY % OF EFFECTIVE Ø	EFFECTIVE Ø (mm)	EFFECTIVE LENGTH (mm)
B	USV0026	10	10	880	0.2	35	6	5.5
	USV0027	10	10	880	0.10	29	5.5	5
	USV0028	8	10	880	0.10	29	5.5	5
	USV0029	10	10	880	0.05	18	3.5	5
	USV0030	8	10	880	0.05	18	3.5	5
	USV0031	6	10	880	0.05	18	3.5	5
	USV0032	10	10	880	0.03	13	2.5	5
	USV0033	8	10	880	0.03	13	2.5	5
	USV0034	6	10	880	0.03	13	2.5	5

CAVITY AND CORE COMPONENTS

Sintered Vents – For Gravity & Low-Pressure Diecasting

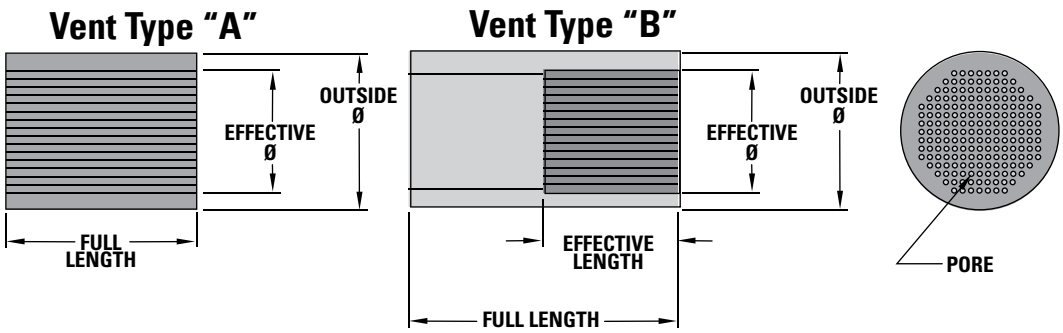

Installation Information for All Sintered Vents

- The recommended press-fit is 0.01 to 0.02mm for outside diameters of 10mm or less, and 0.015mm to 0.035mm for outside diameters over 10mm
- Use a plastic or wooden hammer for installation. Do not tap the pore surface of the sintered vent with a metallic or hard tool. The use of hard tools will result in clogging or chipping of the vents
- Do not grind, machine, or cut the pore surfaces

Ultrasonic Cleaning

- Use ultrasonic cleaning to periodically clean pores in the sintered vents, as required

SINTERED VENTS FOR GRAVITY AND LOW-PRESSURE DIECASTING APPLICATIONS
VENT MATERIAL: IRON ALLOY

VENT TYPE	ITEM NUMBER	OUTSIDE Ø (mm)	FULL LENGTH (mm)	NO. OF PORES	PORE Ø (mm)	POROSITY %
A	USV0001	4	10	39	0.5	55
	USV0002	6	10	61	0.5	40
	USV0003	6	15	61	0.5	40
	USV0004	8	10	89	0.5	35
	USV0005	8	15	89	0.5	35
	USV0006	10	10	200	0.5	34
	USV0007	10	15	200	0.5	34
	USV0008	12	10	200	0.5	31
	USV0009	12	15	200	0.5	31
	USV0010	14	15	340	0.5	35
	USV0011	16	15	340	0.5	32
	USV0012	18	15	553	0.5	34
	USV0013	20	15	550	0.5	33
	USV0014	28	15	970	0.5	30
	USV0015	5	10	89	0.3	30
	USV0016	5	15	89	0.3	30
	USV0017	6	10	89	0.3	29
	USV0018	6	15	89	0.3	29
	USV0019	8	10	200	0.3	28
	USV0020	8	15	200	0.3	28
	USV0021	10	10	340	0.3	31
	USV0022	10	15	340	0.3	31
	USV0023	12	10	340	0.3	28
	USV0024	12	15	340	0.3	28

All dimensions are in millimeters (mm).

CAVITY AND CORE COMPONENTS

Vortex® Core Pins and Plugs

Vortex®



Vortex Core Pins and Plugs are made from a porous, sintered metal with a porosity of 25% air by volume. With a series of interconnected pores averaging a diameter of 7 (.0003") microns throughout the material. Using Vortex® in appropriate areas **eliminates gas buildup, reduces injection pressure, lowers cycle times, gloss levels and substantially reduces scrap and reject rates**.

Vortex Pins and Plugs provide a location-specific method of venting gas. Due to its porosity volume, one fourth of the surface becomes a vent.

Vortex Benefits:

- **Tool Simplification**
- **Prevents Burning**
- **Eliminates Shrink & Short Shots**
- **Aids in Part Ejection**
- **Enhances Part Appearance**
- **Reduces Gloss & Cycle Time**
- **Prevention of Knit Lines**
- **Melt Delivery Simplification**

Vortex Pins & Plugs

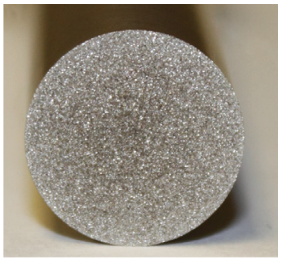

- Pins are 3" long and are available in diameters of .250", .375" and .500"
- Plugs are offered in .250", .500" and 1.00" lengths in diameters of .250" and .375"
- Heat treated to 43 HRC
- Tensile strength: 74,000 lbs./sq.in.
- Thermal Linear Expansion Coefficient: (at 68˚F - 302˚F) 6.67-6.94 E-06 in./in./F˚
- Porosity: 25% air by volume
- Heat transfer co-efficient (at room temperature): 16.93–19.35 BTU/ft. hr. F˚

Vortex Core Pin

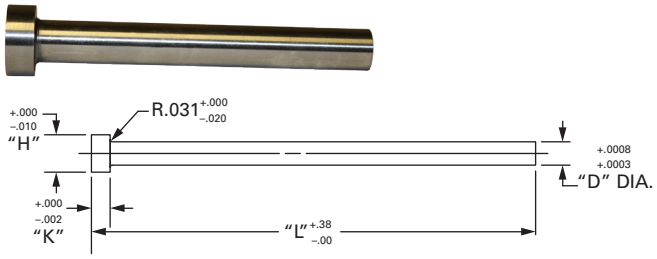

ITEM NUMBER	D PIN DIA	H HEAD DIA	L PIN LENGTH	K HEAD THICKNESS	PORE SIZE MICRONS
PC17M307	.250	0.437	3	0.187	7
PC25M307	.375	0.625	3	0.25	7
PC33M307	.5000	0.75	3	0.25	7

Vortex Plug

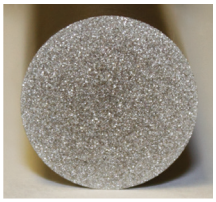

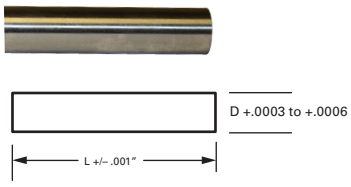

(+.0003 – +0.0006 on OD, +/– .001 on length)

ITEM NUMBER	D PIN DIA	L PIN LENGTH	MICRONS
PP141407	0.25	0.25	7
PP141207	.250	0.50	7
PP381207	.375	0.50	7
PP38107	.375	1.00	7

All technical and engineering data, suggested procedures, specifications and applications contained in this publication are for general information only. Molder's World, Inc. and/or their distributors disclaim any and all express or implied warranties of merchantability, suitability for any particular purpose or use, or freedom from infringement of any patent, trademark or copyright. Vortex® is a registered trademark of Molder's World Inc

CAVITY AND CORE COMPONENTS

Air Poppet Valves – Applications

Air Poppet Valves – VA
Features and Benefits

- Prevents mold damage due to ejection problems with deep-draw or thin-walled parts
- More durable and precision-made than competitive units

These precision-engineered valves are designed to remedy the vacuum problem often encountered during the molding of deep-draw (e.g., buckets) or thin-walled parts. Air flow, timed to coincide with the ejection cycle, opens the valve to break the vacuum and facilitate part ejection. A precision-ground valve seat helps prevent flash from entering the assembly during injection. Each valve is matched to the body to further assure reliable performance.



Typical Application

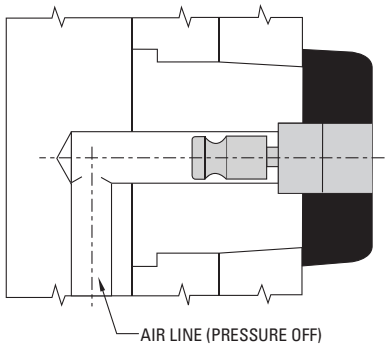

Mold Closed

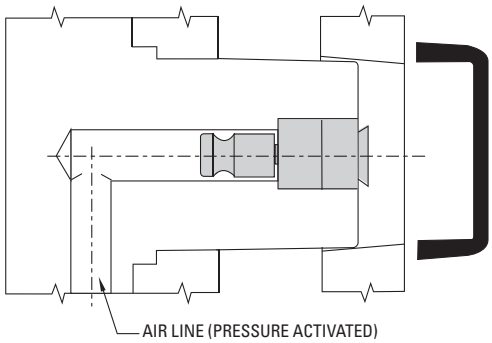

Mold Open

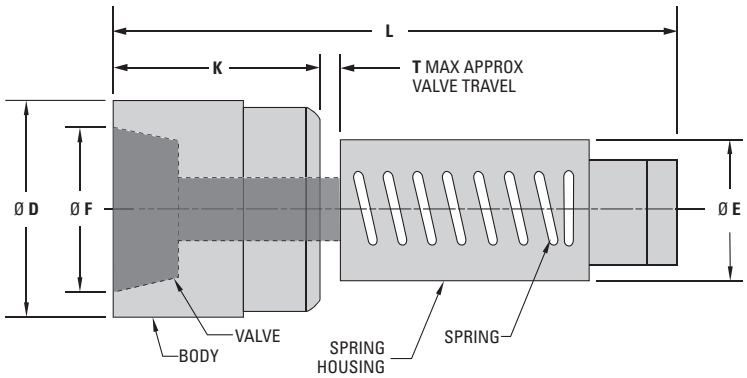

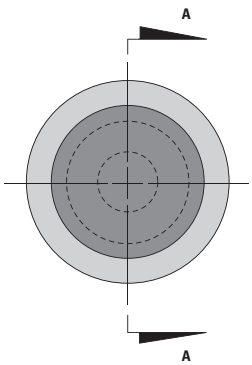

INFORMATION KEY:
D = Outside Diameter
E = Housing Diameter
F = Approx. Valve Diameter
G = Hole Diameter
H = Hole Depth
K = Body Length
L = Overall Length
N = Depth
T = Max Valve Travel

Body Material: Stainless Steel
Body Hardness: 52-54 HRC
Valve Material: DIN 1.2516
Valve Surface Treatment: DLC (diamond like coating)
Max. Temp: 120°C (250°F)
Operating Air Pressure: 58 PSI min. 87 PSI max
Dimensions: All dimensions are in mm

Air Poppets

ITEM NUMBER	Ø D	Ø F (APPROX)	K BODY LENGTH	L OVERALL LENGTH	Ø E	T MAX TRAVEL
VA01D	8	6.6	11	24	6	1.0
VA02D	12	9.7	18	34	8	1.0
VA03D	18	14.8	22	45.5	12	1.0

All dimensions shown are in millimeters (mm).

CAVITY AND CORE COMPONENTS

Air Poppet Valves – Typical Installations –

Typical Installations

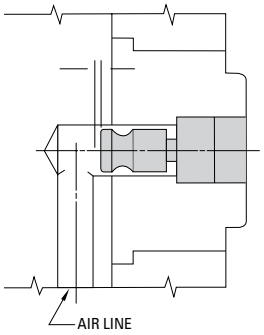

Standard 'A' Series Mold Base Installation (Ejector pins required for part ejection)

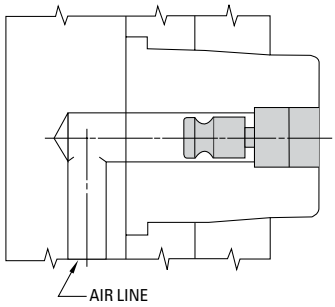

'X' Series Stripper Plate Mold Base Installation (Stripper plate required for part ejection)

Pocket Machining Dimensions

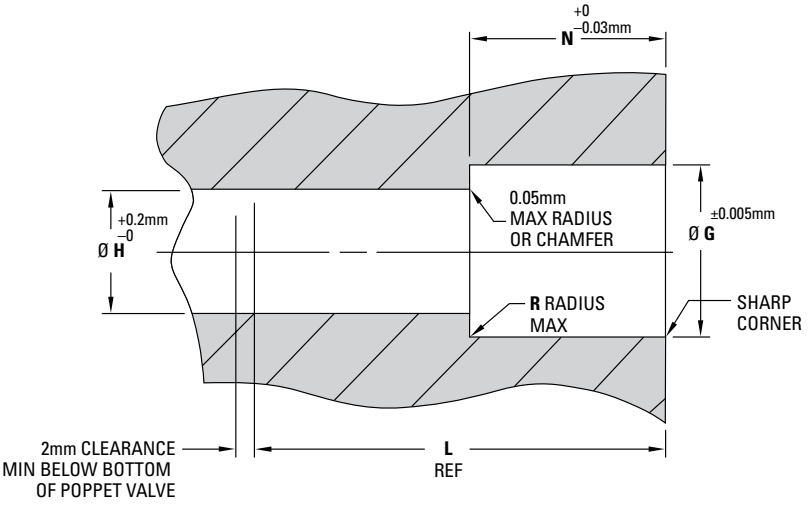

ITEM NUMBER	Ø G	N DEPTH	Ø H	R	L REF
VA01D	8	11	6.75	0.1	24
VA02D	12	18	9	0.2	34
VA03D	18	22	14	0.3	45.5

All dimensions shown are in millimeters (mm).

Installation Information

- Press-fit installation required
- Maintain a close tolerance press fit, as specified. Too loose a fit could allow the Air Poppet Valve to move out of position, while too tight a press fit could interfere with the movement of the valve

NOTES:

1. Pressure to air line of Air Poppet Valve and machine ejection should be activated at the same time. This allows valve to relieve negative pressure build-up (vacuum) in the cavity during part ejection.
2. The air flow to the poppet valve must be fully relieved to the atmosphere after each cycle to ensure that the poppet valve closes before the next injection cycle. Material injected into a partially open poppet valve could cause damage to the valve and/or the mold. Control valves and limit switches to be supplied by moldmaker and/or molder.
3. The Air Poppet Valve should never be used as the sole means of part ejection. Material shrinkage and other factors will not allow it to be used as an alternative to ejector pins or stripper plates.
4. Do not position Air Poppet Valve directly under hot drop.

CAVITY AND CORE COMPONENTS

Runner Shut-Off Inserts – Applications

U.S. Patent No. 5,208,053



DME Runner Shut-Off Inserts provide a precise method of blocking or directing material flow to one or more cavities in multi-cavity or family molds.

- Safer and more positive than the use of brass or ejector pins
- Saves material
- Reduces scrap and sorting
- Improves cycle time

Inserts are supplied unmachined as shown in background of photo. Foreground shows sample runner machining, typically done with insert installed in mold.

Typical Applications

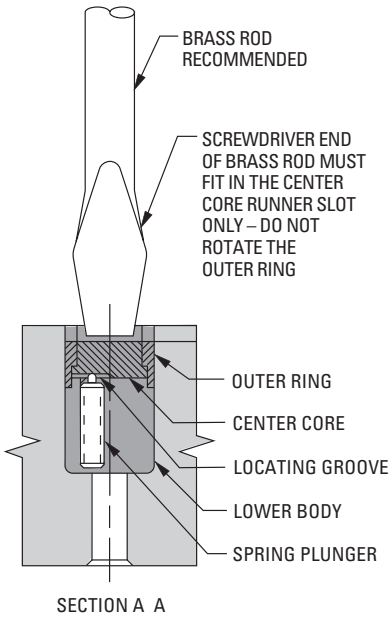

NOTE: Spring plunger in Runner Shut-Off Insert engages a locating groove in the center core. This holds the center core in position at each 90° rotation of the center core, thus providing several combinations of runner shut-off positions.

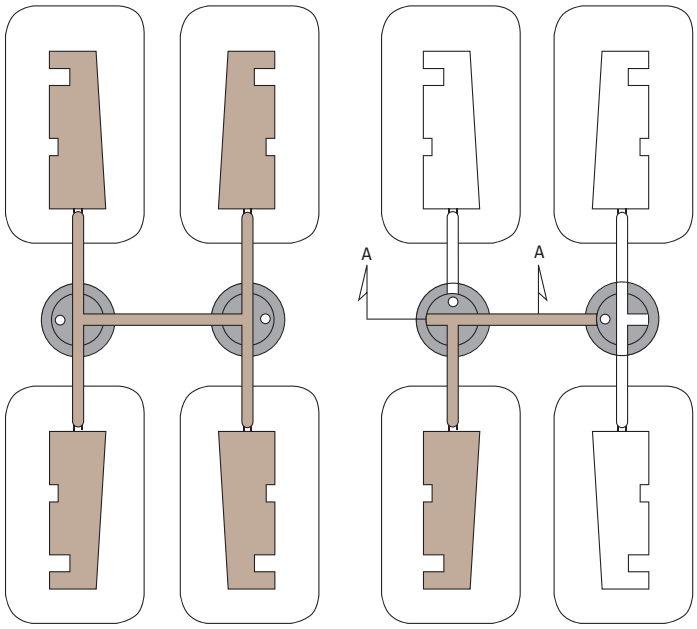

Runner Shut-Off Inserts are shown above in the open position, which allows material to flow to all cavities.

By rotating the center core of the Runner Shut-Off Insert 90° or 180° with the screwdriver end of a brass rod, material flow to one or several cavities can be shut off, as shown above.

Runner Shut-Off Inserts – MRS

ITEM NUMBER	Ø D	L LENGTH
MRS 0013	.5118 (13MM)	.885 (22.5MM)
MRS 0016	.6299 (16MM)	.885 (22.5MM)
MRS 0026	1.0236 (26MM)	1.260 (32MM)

All dimensions are in inches except for several parenthetical reference dimensions in millimeters.

INFORMATION KEY:
C = Depth of Runner
D = Diameter
L = Length
R = Radius
W = Width of Runner
Material: Stainless Steel
Hardness: 50 ± 3 HRC
Max. Temp: 120°C (250°F)
Dimensions: All dimensions are in inches, except as noted

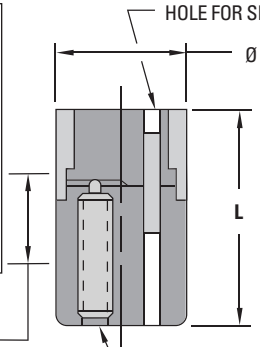

‹MEASURE Ø **D** IN THIS AREA ONLY. TOP AND BOTTOM OF INSERT HAVE A VERY SLIGHT RELIEF FOR PROPER INSTALLATION AND OPERATION.

DO NOT ADJUST SPRING PLUNGER. IT HAS BEEN SUPPLIED INSTALLED TO THE CORRECT POSITION.

CAVITY AND CORE COMPONENTS

Runner Shut-Off Inserts – Machining Information

Dimensions for Machining Pocket for Runner Shut-off Inserts

- Pockets are typically bored in soft steel and jig ground in hardened steel
- Maintain a close tolerance press fit, as specified. Too loose a fit could allow the insert to move out of position, while too tight a press fit might prevent the center core from rotating when required

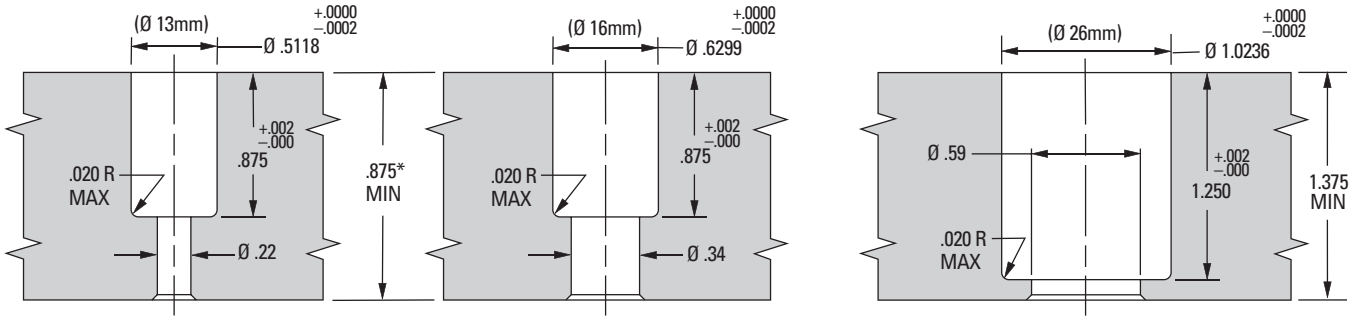

MRS 0013 **MRS 0016** **MRS 0026**

* When using a 7/8 thick plate with the MRS 0013 or MRS 0016 inserts, machine the .5118 or .6299 diameters through the plate. Inserts must seat against a supporting plate before any grinding or machining is done and during the molding process.

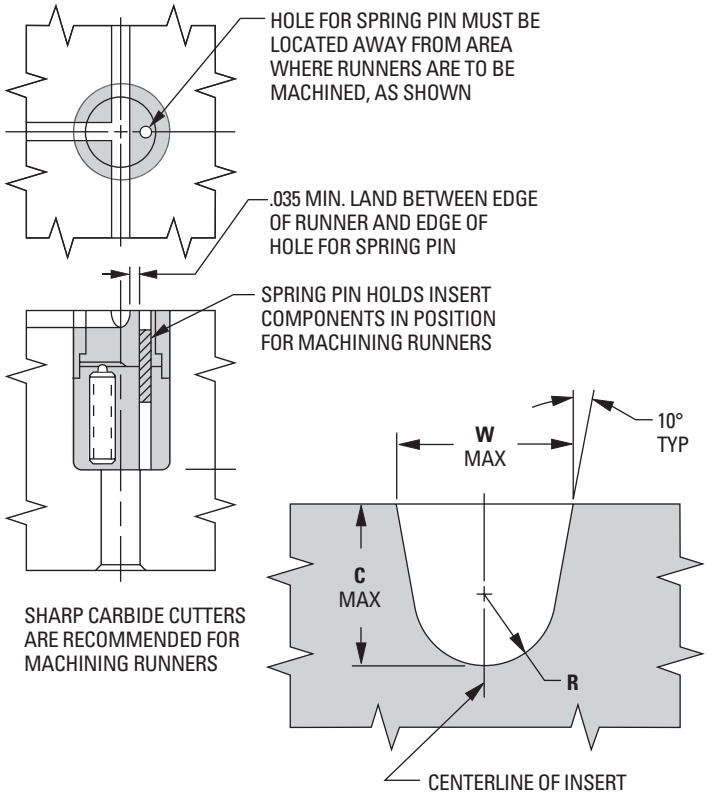

Dimensions for Machining Runners

RECOMMENDED RUNNER SIZES					
USE INSERT ITEM NUMBER	W MAX	C MAX	R RADIUS	EQUIV Ø	AREA SQ IN
MRS 0013 (MRS 0016 & 26)	.099	.091	.040	.095	.007
	.126	.120	.050	.123	.012
MRS 0016 (MRS 0026)	.150	.131	.062	.141	.016
	.168	.144	.070	.156	.019
	.186	.157	.078	.172	.023
	.206	.175	.086	.191	.029
MRS 0026	.260	.218	.109	.239	.045
	.298	.250	.125	.274	.059
	.334	.281	.140	.308	.074
	.372	.312	.156	.342	.092
	.410	.343	.172	.377	.112
	.446	.375	.187	.411	.133

Note: All runners should be machined along the center line of the insert and at 90° to the center line. If this is not done the runners will not align closely when rotated 90° or 180° to shut-off material flow to a cavity. All runners should be machined with inserts installed in the mold.

Mold and Runner Machining/Installation Data

Additional machining and installation data available. Contact DME.

All dimensions are in inches except for a few metric reference dimensions that are in millimeters and are shown in parentheses.

CAVITY AND CORE COMPONENTS

EXAflow Cashew Gate Insert Options

The Intelligent Solution... Formed to perfection

Standard Flow Round **GTR Series**

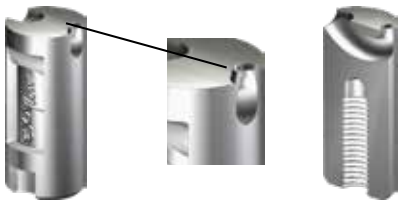

Standard Flow Rectangular **GTE Series**



Closed Gate **Miniflow® GTM Series**

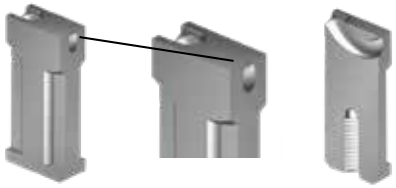

Contourable **Midiflow® GMK Series**



Contourable **Maxiflow® GXK Series**



Contourable **Konturflow® GTK Series**

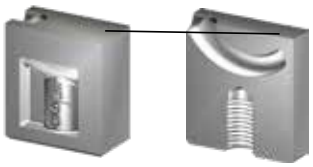

Anti-Rotational Locking System, Viscosity Tables & Installation Dimensions

Service:

Need help choosing the correct cashew gate? DME engineers are available to assist with a free consultation to identify the ideal cashew gate for your application.
Please send the following information to: DME_Mech_Eng@dme.net

- A copy of your expanded model in XT or Step format
- Resin type
- Gate location
- Number of cavities

We will send you back your model with the cashew gate installed within 24 hours.

CAVITY AND CORE COMPONENTS

Cashew Gate Inserts

STANDARD FLOW GTR SERIES (Round)



For tunnel gating of small to medium sized moldings along a flat separating plane. The projecting calotte ensures concealed degating.

- Available gate diameters from 0.8 to 2.4mm
- Usable for all thermoplastics including fillers up to 50% glass fiber.

Material: 1.4028-X20Cr13 Stainless Steel
Hardness 50 +5HRC

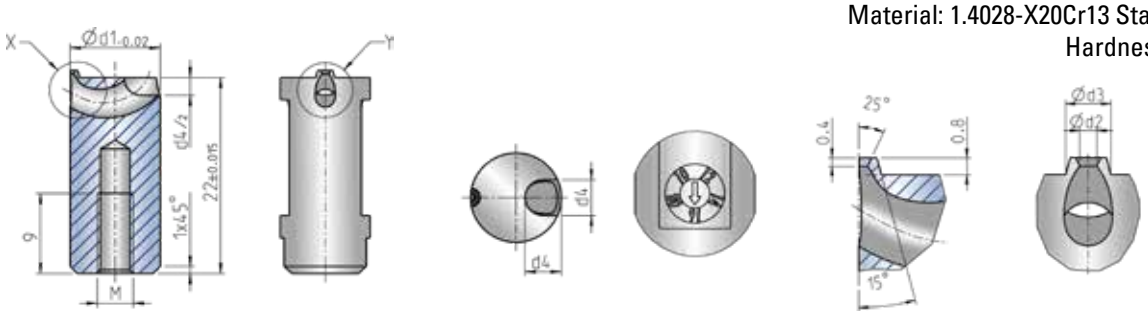

						VISCOSITY (RHEOLOGY)		
ITEM NO.	d1	d2	d3	d4	M	HIGH FLOWABILITY	REGULAR FLOWABILITY	LOW FLOWABILITY
GTR1008	10	0.8	2.1	4	4	8	7	5
GTR1012		1.2	2.5			20	16	10
GTR1014		1.4	2.7			30	23	15
GTR1016		1.6	2.9			40	30	20
GTR1208	12	0.8	2.1	5	5	8	7	5
GTR1210		1	2.3			14	12	9
GTR1212		1.2	2.5			20	16	10
GTR1214		1.4	2.7			30	23	15
GTR1216		1.6	2.9			40	30	20
GTR1218		1.8	3.1			54	40	27
GTR1220		2	3.3			68	52	34
GTR1412	14	1.2	2.5	6	6	20	16	10
GTR1414		1.4	2.7			30	23	15
GTR1416		1.6	2.9			40	30	20
GTR1418		1.8	3.1			54	40	27
GTR1420		2	3.3			68	52	34
GTR1422		2.2	3.5			85	65	43
GTR1424		2.4	3.7			100	80	50
						SHOT WEIGHT IN GRAMS		

Installation Example

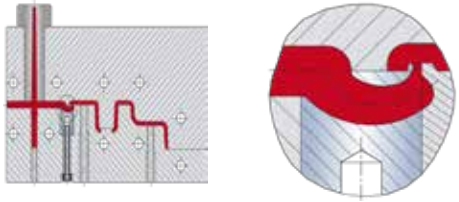

Additional Information:
Page 9 - Anti-rotational locking system & Viscosity table
Page 10 - Installation dimensions

CAVITY AND CORE COMPONENTS

Cashew Gate Inserts

STANDARD FLOW GTE SERIES (Rectangle)



For tunnel gating of small to medium sized moldings along a flat separating plane. The projecting calotte ensures concealed degating.

- Available gate diameters from 0.8 to 2.4mm
- Usable for all thermoplastics including fillers up to 50% glass fiber.

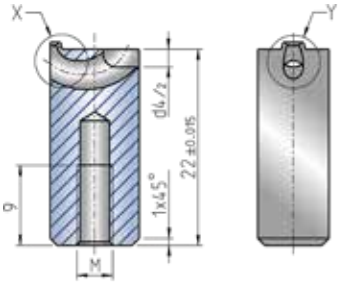

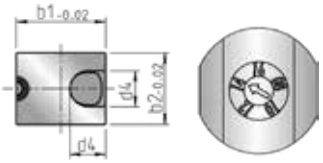

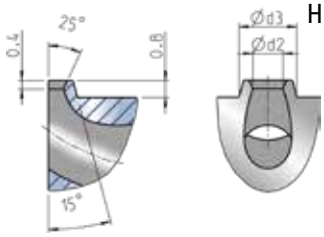

Material: 1.4028-X20Cr13 Stainless Steel
Hardness 50 +5HRC

							VISCOSITY (RHEOLOGY)		
ITEM NO.	b1	b2	d2	d3	d4	M	HIGH FLOWABILITY	REGULAR FLOWABILITY	LOW FLOWABILITY
GTE1008	10	8	0.8	2.1	4	4	8	7	5
GTE1010			1	2.3			14	12	9
GTE1012			1.2	2.5			20	16	10
GTE1014			1.4	2.7			30	23	15
GTE1016			1.6	2.9			40	30	20
GTE1208	12	10	0.8	2.1	5	5	8	7	5
GTE1210			1	2.3			14	12	9
GTE1212			1.2	2.5			20	16	10
GTE1214			1.4	2.7			30	23	15
GTE1216			1.6	2.9			40	30	20
GTE1218			1.8	3.1			54	40	27
GTE1220			2	3.3			68	52	34
GTE1412	14	12	1.2	2.5	6	6	20	16	10
GTE1414			1.4	2.7			30	23	15
GTE1416			1.6	2.9			40	30	20
GTE1418			1.8	3.1			54	40	27
GTE1420			2	3.3			68	52	34
GTE1422			2.2	3.5			85	65	43
GTE1424			2.4	3.7			100	80	50
							SHOT WEIGHT IN GRAMS		

Installation Example

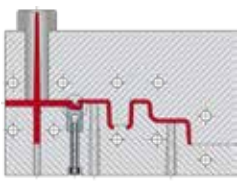



Additional Information:
Page 9 - Viscosity table
Page 10 - Installation dimensions

CAVITY AND CORE COMPONENTS

Cashew Gate Inserts

STANDARD CLOSED GATE MINIFLOW® GTM SERIES

Designed for tunnel gating of small, thin-walled moldings. This gate insert has a closed gate diameter and is therefore suitable for the use of low article weight and for very thin-walled moldings.

- The closed surface enables the creation of individual gate diameters
- Usable for all thermoplastics including fillers up to 50% glass fiber.



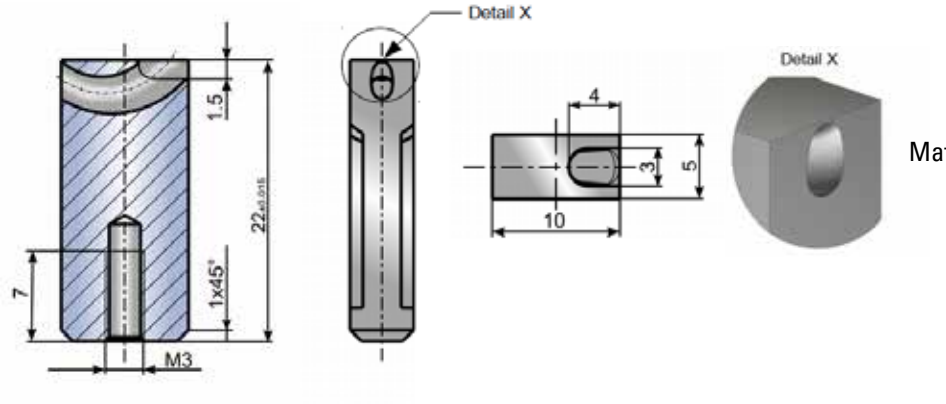

Material: 1.4028-X20Cr13 Stainless Steel
Hardness 50 +5HRC

Miniflow GTM (without gate) recommended procedure to insert the gate.

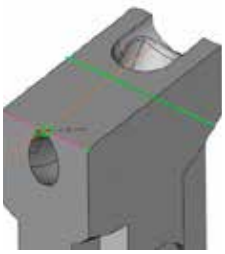

1. Create the gate in 3D CAD. Draw a circle on the end face with the diameter or radius of the gate. Above shows a radius (R0.8) in green.



2. Extrude this sketch with max. possible angle of inclination, depending on gate size, or remove the material immediately by cutting the material incl. draft/taper angle.



3. Thoroughly round off the sharp edge between the bent tunnel and the gate, e.g. by hand using a diamond mounted point.

Installation Example

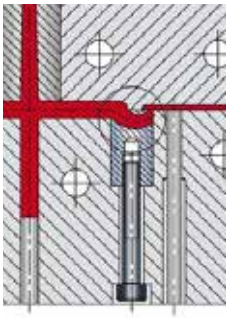

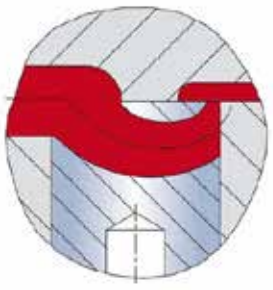

Additional Information:
Page 9 - Viscosity table
Page 10 - Installation dimensions

CAVITY AND CORE COMPONENTS

Cashew Gate Inserts

CONTOURABLE MIDIFLOW® GMK SERIES

For bottom (submarine) gating of medium components. Supports contouring to a depth of 8mm. Suitable for gate diameters up to 1.8mm, shot weights up to 200g per insert and all common plastics, including reinforced type.

- Permits gating immediately behind projecting ribs
- Gate may be remote from molding wall
- The spherical geometry in the gate area permits gating on inclined or curved surfaces



Material: 1.4028-X20Cr13 Stainless Steel
Hardness 50 +5HRC

ITEM NUMBER
GMK1

Gating point may be located up to 8mm above the parting line

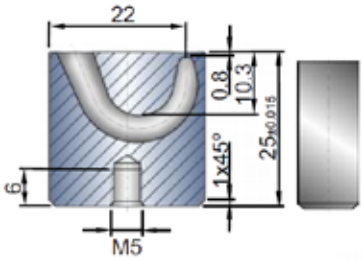

ITEM NUMBER
GMK2

Gating point may be located up to 5mm above or below the parting line

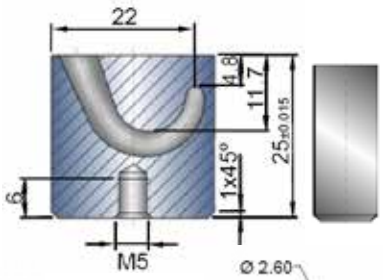

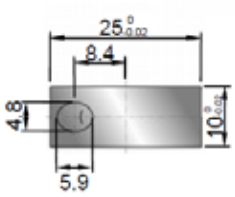

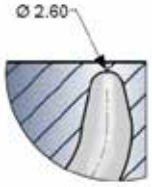

ITEM NUMBER
GMK3

Gating point may be located up to 8mm above or below the parting line

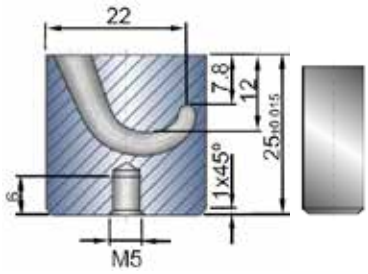

The spherical geometry in the gate area permits gating on incline or curved surfaces.

Additional Information:
Page 9 - Viscosity table
Page 10- Installation dimensions

Installation Examples

BELOW PARTING LINE

ABOVE PARTING LINE

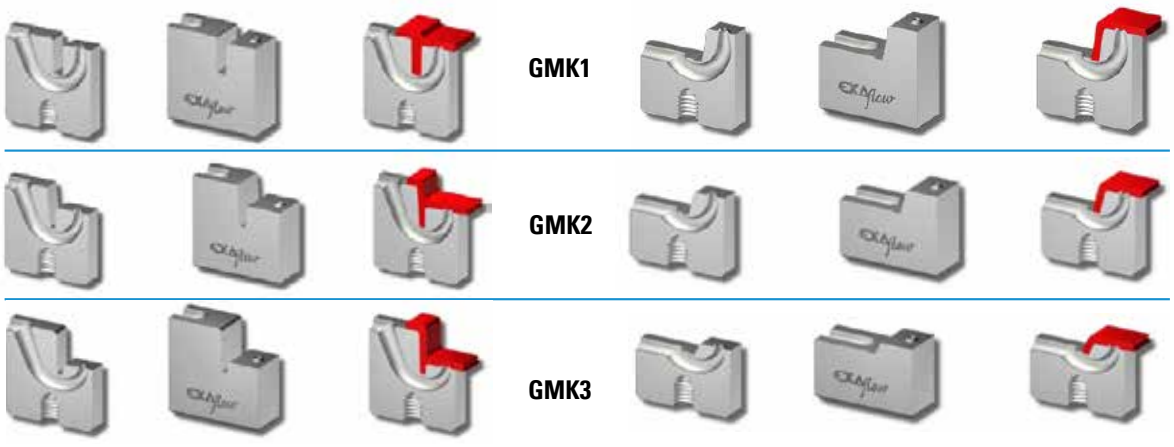

CAVITY AND CORE COMPONENTS

Tunnel Gate Inserts

CONTOURABLE MAXIFLOW® GXK SERIES

For bottom (submarine) gating of medium to large components. Supports contouring to a depth of 10 mm. Suitable for gate diameters up to 3.5mm, shot weights up to 1200g per insert and all common plastics, including reinforced type.

- Permits gating immediately behind projecting ribs
- Gate may be remote from molding wall
- The spherical geometry in the gate area permits gating on inclined or curved surfaces



Material: 1.4028-X20Cr13 Stainless Steel
Hardness 50 +5HRC

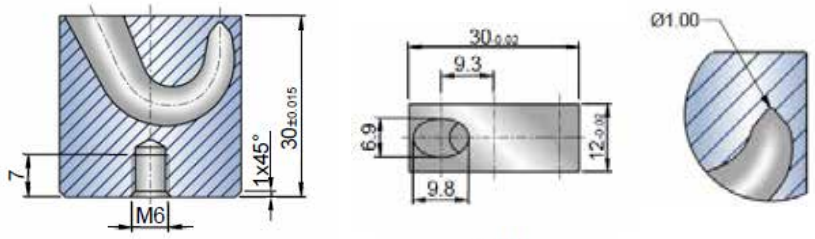

The spherical geometry in the gate area permits gating on incline or curved surfaces.

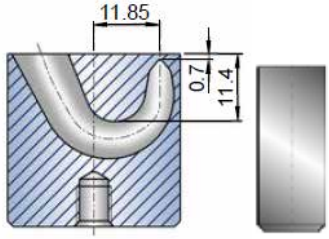

ITEM NUMBER
GXK1

Gating point may be located up to 10mm above the parting line

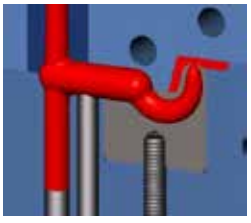

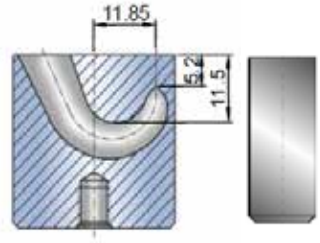

ITEM NUMBER
GXK2

Gating point may be located up to 5mm above or below the parting line

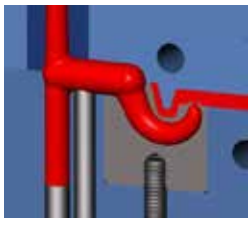

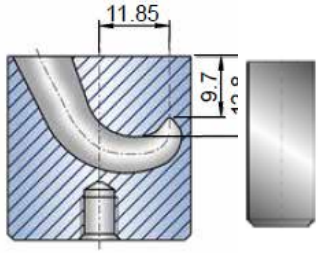

ITEM NUMBER
GXK3

Gating point may be located up to 10mm above the parting line

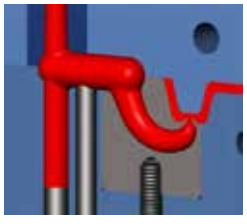

For best operating results the Maxiflow® insert requires one central ejector and one supporting ejector. Please ensure that all sharp edges in the runner are thoroughly rounded. For reliable demolding, the diameter of the runner must exceed that of the curved tunnel.



Optimum gate geometry, with edges rounded



Contouring of a supporting ejector

CAVITY AND CORE COMPONENTS

Tunnel Gate Inserts

CONTOURABLE KONTURFLOW® GTK SERIES

For tunnel gating of small to medium sized moldings contoured in the gate area.

- Maximum gate diameter (pointed tunnel) up to 1.7mm
- Contourable up to 3mm depth
- Usable for all thermoplastics including fillers up to 50% glass fiber



Material: 1.4028-X20Cr13 Stainless Steel
Hardness 50 +5HRC

ITEM NUMBER
GTK

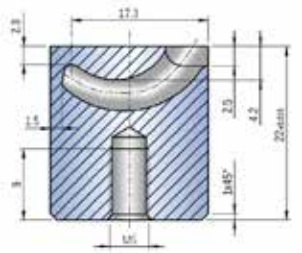

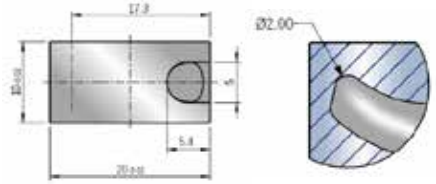

The spherical geometry in the gate area permits gating on incline or curved surfaces

GMK, GTK & GXK CALOTTE DESIGNS

STANDARD

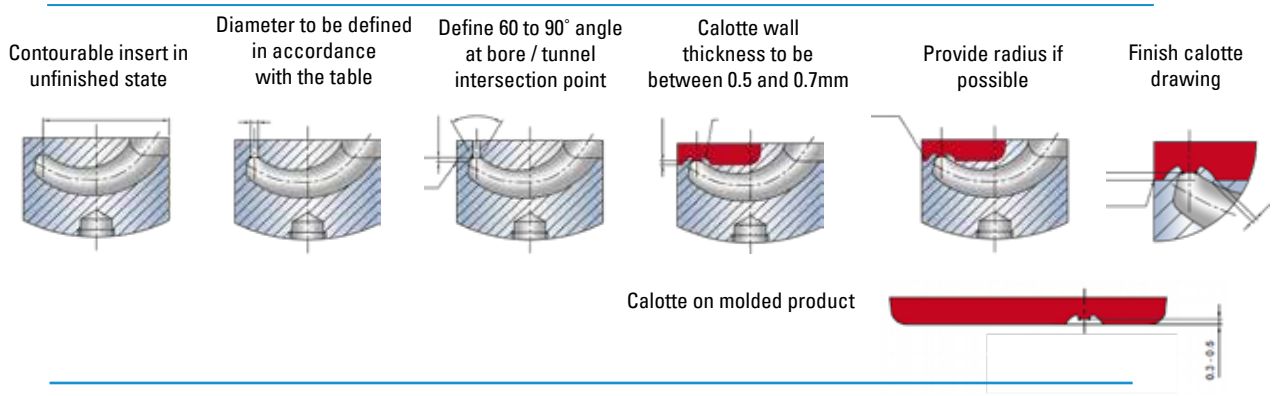

INCLINED SURFACE

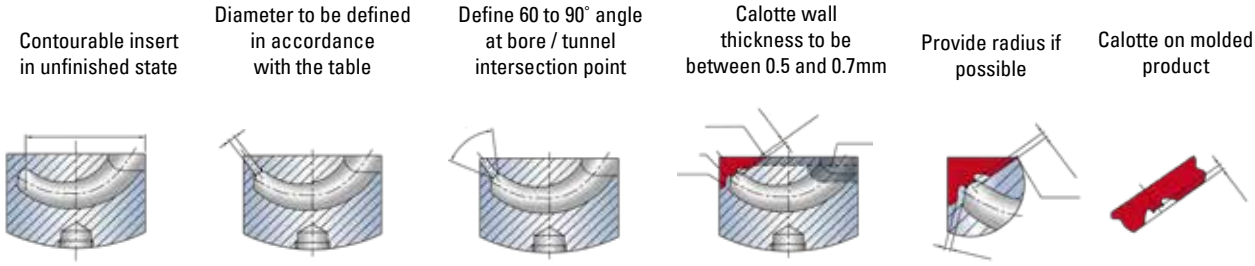

CURVED SURFACE

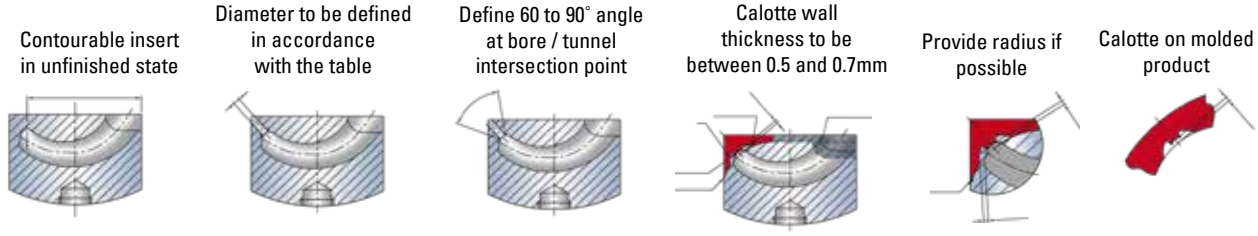

CAVITY AND CORE COMPONENTS

Tunnel Gate Inserts

ANTI-ROTATION LOCKING SYSTEM

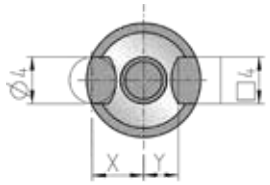

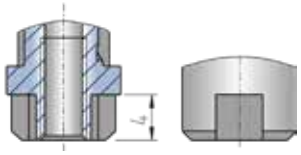

ANTI-ROTATIONAL LOCKING SYSTEM DIMENSIONS		
ITEM NUMBER	PARALLEL PIN DISTANCE X	KEY DISTANCE Y
GTR10	4.5mm	3.0mm
GTR12	5.2mm	3.8mm
GTR14	6.0mm	4.5mm

The insert can be secured against inadvertent rotation by a parallel pin and key system. In most cases the gate insert is adequately secured by the bolt.



LOW VISCOSITY
(PA, PE, PC, PET, PVC, PS, SB, TPA, TPE, TPU)



MEDIUM VISCOSITY
(ASB, ASA, PS, PC/ABS, PBT, SAN)



HIGH VISCOSITY
(PC, PPS, PSU, POM-H, PES, PPO, PEI, PC-ABS, PC-PBT, PMMA, PVC)

TABLE OF VISCOSITY - STANDARD TUNNEL GATES

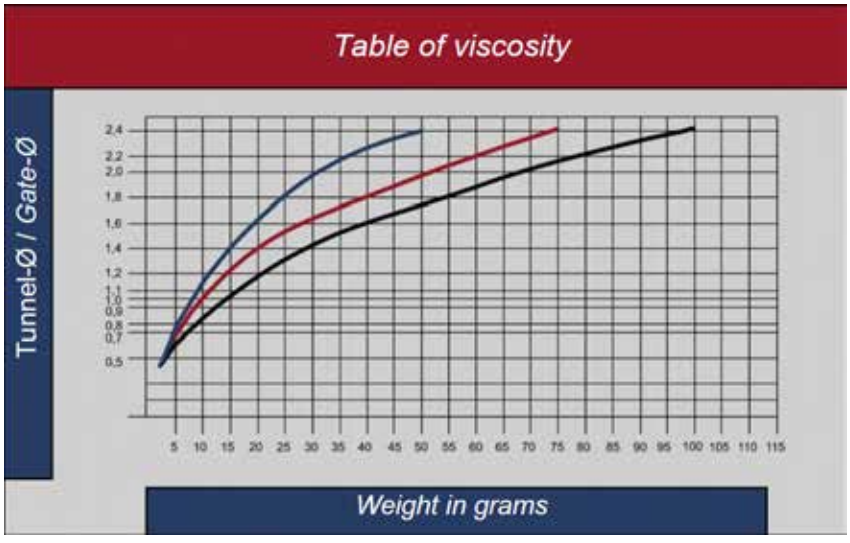

TABLE OF VISCOSITY - CONTOURABLE INSERTS

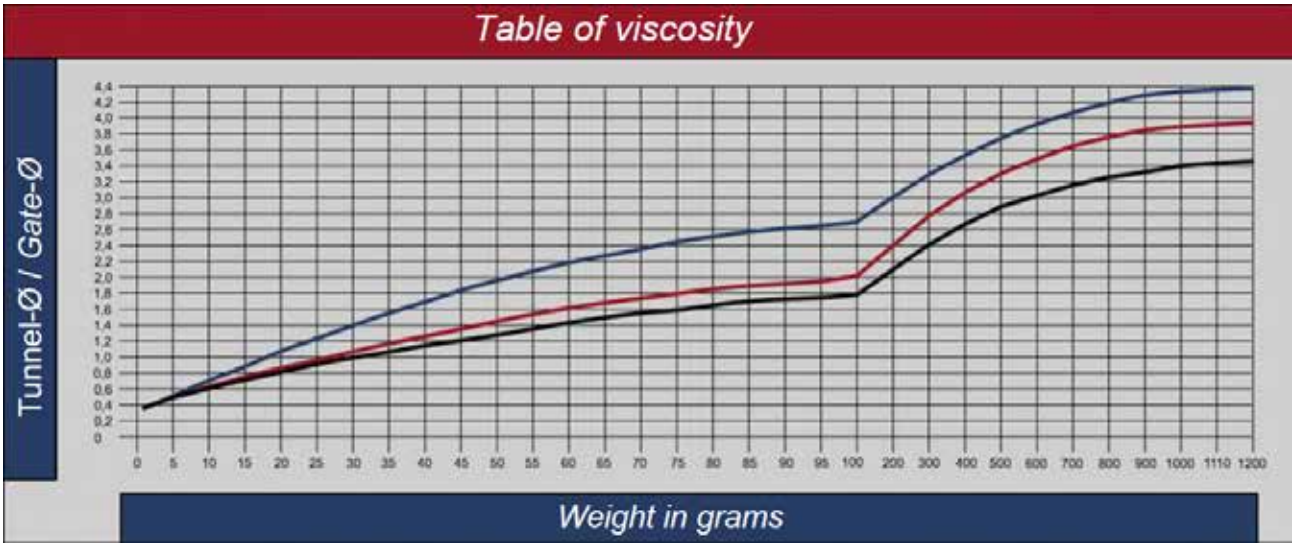

CAVITY AND CORE COMPONENTS

Tunnel Gate Inserts

INSTALLATION DIMENSIONS GTR/GTE, GTM, GMK

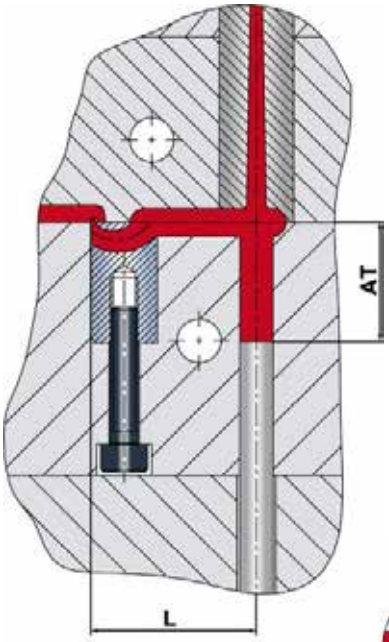

Recommended distances (L) from the injection point to the sprue ejector are given in the table below for various material groups.

The distance (AT) describes the correlated ejector depth.

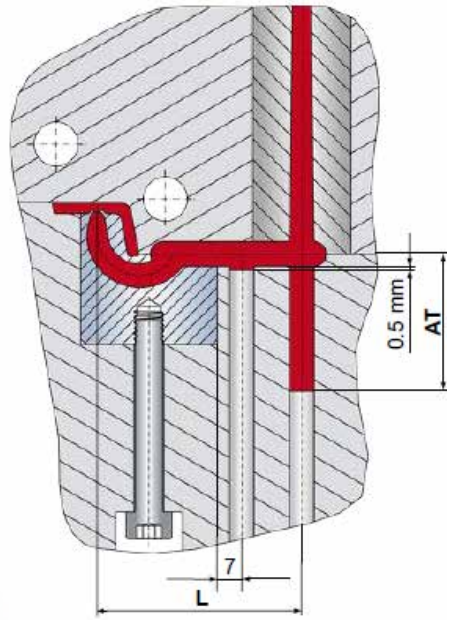

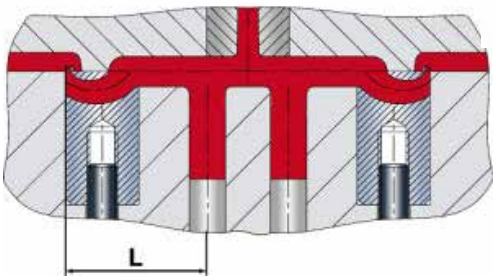

PLASTIC GROUP	GTR/GTE	GTM	GTK	GXK	GMK
HD-PE, LD-PE, PET, PP, PA, PC, PVC. **(L)**	>20	>15	>25	>35	>30
RUNNER DESIGN	ROUND				
EJECTOR DEPTH **(AT)**	>16	>11	>20	>35	>30
ABS, M ABS, ASA, PS, PC/ABS, POM, PBT. **(L)**	>25	>20	>30	>40	>35
RUNNER DESIGN	ROUND				
EJECTOR DEPTH **(AT)**	>20	>14	>24	>40	>35
ELASTOMER TPE, TPU, TPP, TPA.**(L)**	>15	>15	>20	>30	>25
RUNNER DESIGN	ARBITRARY				
EJECTOR DEPTH **(AT)**	>11	>11	>16	>30	>16
BRITTLE PLASTICS **(L)**	>30	>25	>40	UPON REQUEST	
RUNNER DESIGN	HALF-ROUND				
EJECTOR DEPTH **(AT)**	>24	>18	>32	UPON REQUEST	

MOLD COOLING

Jiffy-Tite® Connectors

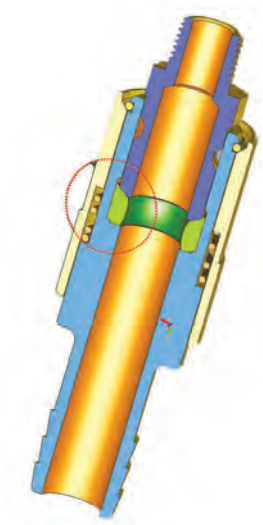

Jiffy-Tite® Delivers Trusted and Reliable Products

The Jiffy-Tite® line of mold cooling components is the industry's most trusted and reliable product range in the injection molding industry. These highly durable and long-lasting components have been the industry benchmark for quality for injection molders for over five decades. It's no surprise that the plastics industry has come to rely on Jiffy-Tite, whose vision and innovation led to the invention of the original ground-breaking face seal technology for quick disconnects more than half a century ago.

These premium products deliver superior quality, unique design, unmatched performance, and the tightest tolerances in the industry – all at a competitive cost. Highly engineered components include quick-disconnect connectors, male and female plugs, extension plugs, straight and spiral brass baffles, water and cascade water junctions, pressure plugs, coolant bridges, and seal removal replacement kits. The bottom line is that Jiffy-Tite components are highly reliable and leak-proof, ensuring the most consistent and efficient mold cooling operations.

Greater Value than the Rest



Jiffy-Tite components manufactured from high-quality brass are distinguished by a wide range of unique benefits that differentiate them from the competition. Jiffy-Tite's quick-disconnect sockets feature a novel 0.005" to 0.015" step in the sealing surface of the socket to help prevent leaks. A Viton* fluoroelastomer seal provides greater heat resistance and chemical resistance versus typically used silicone seals. Tight-tolerance manufacturing results in consistent pressure in the socket which ensures leak-free performance.

Also unique is the valve component design which eliminates the risk of reverse shut off. With competitive brands, valve components could become dislodged or disengaged causing the valve to shut or stay shut during operation. The internal socket and plug and valve component design eliminate this problem and promote excellent part mating capabilities to ensure smoother operation.

Jiffy-Tite's thread sealant offers superior performance for plugs. Jiffy Seal is pliable, resists drying, and offers significantly better sealing compared to less expensive products that may flake off. The high-performance seal eliminates the need for TPFE tape, thus reducing cost and speeding up set-up times.

Jiffy-Tite components are manufactured under ISO 9000/9001 quality standards and undergo extensive leak and compression testing. Supported by leading-edge engineering and technology, they are the time-tested standard which gives injection molders the required confidence and performance to run highly efficient and smooth mold cooling operations.

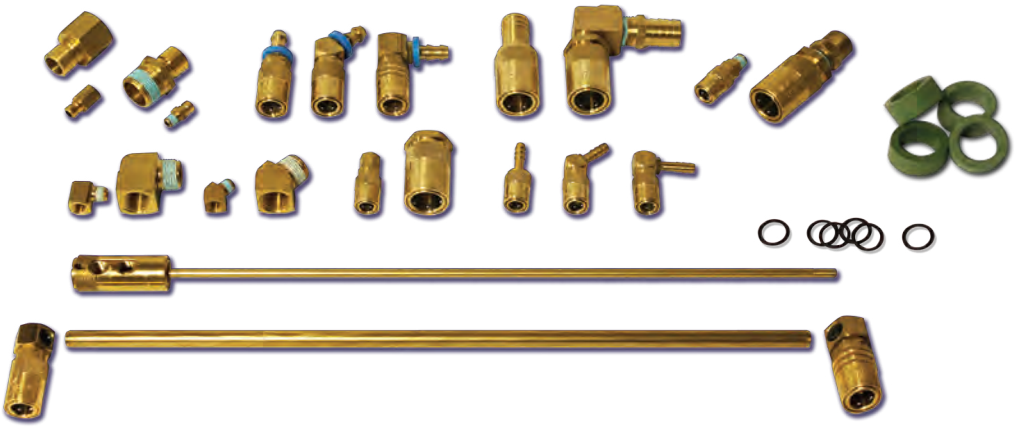

***NOTE**: It is up to the customer to verify that the use of Viton seal is compatible with the application and coolant medium being used. Viton is incompatible with highly polar chemicals, organic acids, amines, ketones, acetone, eaters and acetic acid. Other seal materials can be provided on request.

MOLD COOLING

Jiffy-Tite® Connectors

DME Jiffy-Tite plugs used with DME Jiffy-Tite (flow-thru type) Sockets and DME Jiffy-Matic (automatic shut-off type) Sockets are designed for use with plastics molds and die-cast dies in water, air or oil lines. They feature a combination brass and stainless steel leakproof construction, have a maximum rated capacity of 200 psi and withstand temperatures up to 400°F with supplied Viton seals. DME Jiffy-Tite and Jiffy-Matic Sockets can be used interchangeably with the same Jiffy-Tite Plugs already in your mold or die. Comparable sizes of both type sockets have the same O.D., permitting interchangeability even when the plugs are flush mounted.



PLUG



SOCKET

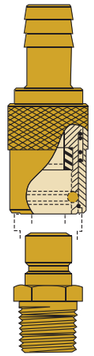

Jiffy-Tite® Sockets – JS
(Flow-Thru Type)

DME Jiffy-Tite Sockets have a large thru hole to provide unrestricted flow. These quick-connection couplers are available with either straight, 45° or 90° hose stems, or standard female or male NPT threads.

DME Jiffy-Tite and Jiffy-Matic Sockets have the same O.D., permitting complete interchangeability with Jiffy-Tite Plugs installed in your mold or die.

The Jiffy-Tite or Jiffy-Matic Sockets can be used with either male, female or extension plugs.

Jiffy-Matic® Sockets – JS
(Automatic Shut-Off Type)

DME Jiffy-Matic Sockets open automatically when connected and shut off automatically when disconnected. Unlike most valve-type connectors, Jiffy-Matic Sockets are designed to keep flow restriction to a minimum.

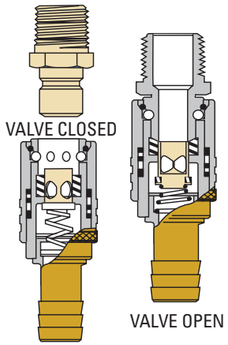

JIFFY-TITE SOCKETS					JIFFY-MATIC SOCKETS	
DESCRIPTION	ITEM NUMBER	FITS HOSE I.D. OR PIPE THREAD	HOSE STEM I.D. OR THRU HOLE	USED WITH STD MALE, FEMALE OR EXTENSION PLUGS	**ITEM NUMBER**	DESCRIPTION
STRAIGHT STEM	JS204	¼	3/16	JP(F/B) 250 TO 253	JS204V	STRAIGHT STEM
	JS205	5/16	¼	JP(F/B) 250 TO 253	JS205V	
	JS206	⅜	¼	JP(F/B) 250 TO 253	JS206V	
	JS306	⅜	¼	JP(F/B) 351 TO 354	JS306V	
	JS308	½	⅜	JP(F/B) 351 TO 354	JS308V	
	JS504	½	⅜	JP(F) 553 TO 556	JS504V	
	JS506	¾	⅝	JP(F) 553 TO 556	JS506V	
90° STEM	JS214	¼	3/16	JP(F/B) 250 TO 253	JS214V	90° STEM
	JS215	5/16	¼	JP(F/B) 250 TO 253	JS215V	
	JS216	⅜	¼	JP(F/B) 250 TO 253	JS216V	
	JS316	⅜	¼	JP(F/B) 351 TO 354	JS316V	
	JS318	½	⅜	JP(F/B) 351 TO 354	JS318V	
	JS514	½	⅜	JP(F) 553 TO 556	JS514V	
	JS516	¾	9/16	JP(F) 553 TO 556	JS516V	
45° STEM	JS224	¼	3/16	JP(F/B) 250 TO 253	JS224V	45° STEM
	JS225	5/16	¼	JP(F/B) 250 TO 253	JS225V	
	JS226	⅜	¼	JP(F/B) 250 TO 253	JS226V	
	JS326	⅜	¼	JP(F/B) 351 TO 354	JS326V	
	JS328	½	⅜	JP(F/B) 351 TO 354	JS328V	
	JS524	½	⅜	JP(F) 553 TO 556	JS524V	
	JS526	¾	9/16	JP(F) 553 TO 556	JS526V	
FEMALE NPT THREAD	JS200	⅛ NPT	¼	JP(F/B) 250 TO 253	JS200V	FEMALE NPT THREAD
	JS300	¼ NPT	⅜	JP(F/B) 351 TO 354	JS300V	
	JS500	½ NPT	⅝	JP(F) 553 TO 556	JS500V	
MALE NPT THREAD	JS201M	⅛ NPT	¼	JP(F/B) 250 TO 253	JS201MV	MALE NPT THREAD
	JS302M	¼ NPT	⅜	JP(F/B) 351 TO 354	JS302MV	
	JS504M	½ NPT	9/16	JP(F) 553 TO 556	JS504MV	

MOLD COOLING

Jiffy-Tite® Plug and Extensions Plugs

Jiffy-Tite® Plugs – JP

Male Plug Mounting Information

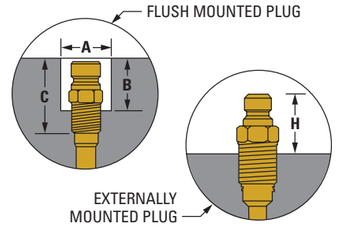

ITEM NUMBER	NPT	HEX SIZE	A	B	C	H
JP250	1/16	7/16	11/16	11/16	1"	5/8
JP251	⅛	7/16	11/16	11/16	1"	5/8
JP252(SV)	¼	9/16	27/32	15/16	1 3/16	⅞
JP253(SV)	⅜	11/16	1.000	15/16	1¼	29/32
JP351	⅛	9/16	1.000	15/16	1¼	⅞
JP352(SV)	¼	9/16	1.000	1 3/32	1 7/16	1 1/32
JP353(SV)	⅜	11/16	1.000	1⅛	1 7/16	1 1/16
JP354(SV)	½	⅞	1 3/16	1¼	1 9/16	1 3/16
JP553	⅜	⅞	1¼	1 3/16	1⅝	1⅛
JP554	½	⅞	1¼	1½	1 13/16	1 7/16
JP556	¾	1⅛	1½	1 9/16	1⅞	1½

Jiffy-Tite Male – JP and Female Plugs – JPF

For Use with Jiffy-Tite or Jiffy-Matic Sockets (Including SV Series)

DESCRIPTION	LENGTH L	PIPE THREAD	Ø HOLE	HEX SIZE	ITEM NUMBER	USED WITH SOCKETS
MALE PLUG (BRASS)	59/64	1/16 NPT	3/16	7/16	JP250	JS204(V/SV) TO JS226(V/SV)
	59/64	1/8 NPT	1/4	7/16	JP251	
	1 5/32	1/4 NPT	1/4	9/16	JP252	
	1 3/16	3/8 NPT	1/4	11/16	JP253	
	1 3/16	1/8 NPT	3/8	9/16	JP351	JS306(V/SV) TO JS328(V/SV)
	1 25/64	1/4 NPT	3/8	9/16	JP352	
	1 25/64	3/8 NPT	3/8	11/16	JP353	
	1 37/64	1/2 NPT	3/8	7/8	JP354	
	1 9/16	3/8 NPT	7/16	7/8	JP553	JS504(V) TO JS526(V)
	1 3/4	1/2 NPT	5/8	7/8	JP554	
	1 3/4	3/4 NPT	5/8	1 1/8	JP556	
FEMALE PLUG** (BRASS)	1"	1/16 NPT	1/4	1/2	JPF0250	JS204(V/SV) TO JS226(V/SV)
	1"	1/8 NPT	1/4	1/2	JPF0251	
	1 9/32	1/4 NPT	1/4	5/8	JPF0252	
	1 13/32	3/8 NPT	1/4	3/4	JPF0253	
	1 9/32	1/8 NPT	11/32	5/8	JPF0351	JS306(V/SV) TO JS328(V/SV)
	1 31/64	1/4 NPT	3/8	5/8	JPF0352	
	1 37/64	3/8 NPT	3/8	3/4	JPF0353	
	1 49/64	1/2 NPT	3/8	15/16	JPF0354	
	1 11/16	3/8 NPT	9/16	15/16	JPF0553	JS504(V) TO JS526(V)
	1 49/64	1/2 NPT	5/8	15/16	JPF0554	
	1 49/64	3/4 NPT	5/8	1 1/8	JPF0556	



Male Plug



Female Plug

All Male Plugs (including SV-Series) and Extension Plugs are now supplied with Jiffy-Seal™ thread sealant. Eliminating the initial need for joint tape or compound, the sealant will withstand temperatures up to 400°F and pressures up to 200 psi.

Jiffy-Tite® Extension Plugs* – JPB

For Use with Jiffy-Tite or Jiffy-Matic Sockets (Including SV Series)

Threaded area with Jiffy-Seal Thread Sealant pre-applied.

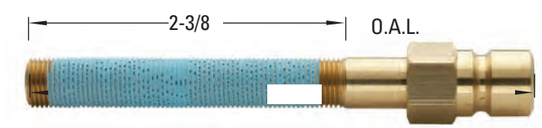

*Designed for use with existing or new NPT tapered pipe-tapped hole in mold or die. Straight threaded area allows easy length adjustment. Cut to suit. No tapering or re-tapping necessary.

PIPE THREAD*	HEX SIZE	O.A.L.	ITEM NUMBER	USED WITH SOCKETS
1/8	7/16	4"	JPB2514	JS204(V/SV) TO JS226(V/SV)
1/8	7/16	6"	JPB2516	
1/8	7/16	8"	JPB2518	
1/4	9/16	4"	JPB2524	
1/4	9/16	6"	JPB2526	
1/4	9/16	8"	JPB2528	
3/8	11/16	4"	JPB2534	
3/8	11/16	6"	JPB2536	
3/8	11/16	8"	JPB2538	
1/8	9/16	4"	JPB3514	JS306(V/SV) TO JS328(V/SV)
1/8	9/16	6"	JPB3516	
1/8	9/16	8"	JPB3518	
1/4	9/16	4"	JPB3524	
1/4	9/16	6"	JPB3526	
1/4	9/16	8"	JPB3528	
3/8	11/16	4"	JPB3534	
3/8	11/16	6"	JPB3536	
3/8	11/16	8"	JPB3538	

SV-Series Jiffy-Matic® Connectors – JS

Two-Way Automatic Shut-Off Type The DME line of SV-Series Jiffy-Matic Connectors features a male plug and socket, each with an automatic shut-off stemmed valve. These connectors are designed for use with plastics molds and die-cast dies in water, air or heat transfer oil lines. They feature a combination of brass and stainless steel in a leakproof construction, have a maximum rated capacity of 200 psi and will withstand temperatures up to 400°F with supplied Viton seals.



SOCKET



PLUG

DME SV-Series Jiffy-Matic Sockets can be used interchangeably with the Jiffy-Tite plugs already in your mold or die. However, the SV-Series Jiffy-Matic Male Plugs can ONLY be used with the SV-Series Jiffy-Matic Sockets. Comparable sizes of both types of sockets and plugs have the same O.D., permitting interchangeability even when the plugs are flush-mounted.

The SV-Series Male Plugs are now supplied with Jiffy Seal® thread sealant. Eliminating the initial need for joint tape or compound, the sealant will withstand temperatures up to 400°F and pressures up to 200 psi.

The SV-Series Jiffy-Matic Male Plugs adds the capability of automatic shut-off at the mold, thereby minimizing coolant loss.

SV-Series Jiffy-Matic® Male Plugs

(Automatic Shut-Off Type with Stemmed Valve)

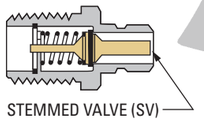

STEMMED VALVE (SV)

The DME SV-Series Jiffy-Matic Male Plugs feature an automatic shut-off stemmed valve. This plug design adds the capability of automatic shut-off at the mold. The plug's shut-off stemmed valve minimizes mold coolant loss, thereby decreasing clean-up time and the possibility of rust occurring on the mold surface. The SV-Series Jiffy-Matic Male Plug can ONLY be used with the SV-Series Jiffy-Matic Socket.

SV-Series Jiffy-Matic® Sockets

(Automatic Shut-Off Type with Stemmed Valve)

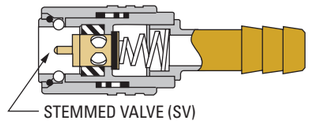

STEMMED VALVE (SV)

The DME SV-Series Jiffy-Matic Sockets feature an automatic shut-off stemmed valve that is designed to work with the SV-Series Jiffy-Matic Male Plugs, as well as the standard male, female and extension plugs. The sockets open automatically when connected and shut-off automatically when disconnected. The SV-Series Jiffy-Matic Sockets are designed to keep flow restriction to a minimum and are available with either straight, 45° or 90° hose stems.

Operating Combinations

Two-Way Shut-Off*

SV-SERIES* MALE PLUGS	WITH	SV-SERIES SOCKETS (EQUIVALENT SIZE)

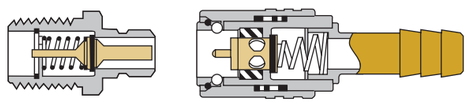

VALVES CLOSED

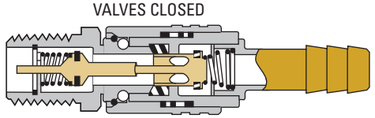

VALVES OPEN

One-Way Shut-Off

STD. MALE, FEMALE OR EXTENSION PLUGS	WITH	SV-SERIES SOCKETS (EQUIVALENT SIZE)

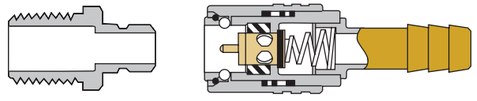

VALVE CLOSED

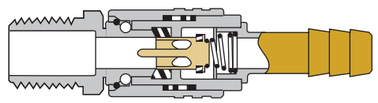

VALVE OPEN

*The SV-Series Jiffy-Matic Male Plugs can only be used for two-way shut-offs and must be used with the SV-Series Jiffy-Matic Sockets.

SV-Series Jiffy-Matic Male Plugs* – JS

(Automatic Shut-Off Type with Stemmed Valve)



SOCKET



PLUG

DESCRIPTION	LENGTH L	PIPE THREAD	Ø HOLE	HEX SIZE	ITEM NUMBER	USED WITH SOCKETS*
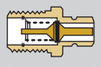 L (BRASS)	1 5/32	1/4 NPT	1/4	9/16	JP252SV	JS204SV TO JS226SV
	1 3/16	3/8 NPT	1/4	11/16	JP253SV	
	1 25/64	1/4 NPT	3/8	9/16	JP352SV**	JS306SV TO JS328SV
	1 25/64	3/8 NPT	3/8	11/16	JP353SV	
	1 37/64	1/2 NPT	3/8	7/8	JP354SV	

**The JP-352-SV male plug has a stepped valve-seat due to the internal space limitations of the 1/4 NPT thread. Even so, it has a greater flow rate than the JP-252-SV male plug, which also has the 1/4 NPT thread.

The SV-Series Jiffy-Matic Male Plugs operate only with the SV-Series Jiffy-Matic Sockets. All SV-Series Jiffy-Matic Male Plugs are supplied with Viton seals for use in water, air and heat transfer oil applications that do not exceed 400°F and 200 psi.

SV-Series Jiffy-Matic Sockets – JS

(Automatic Shut-Off Type with Stemmed Valve)

DESCRIPTION	ITEM NUMBER	FITS HOSE I.D. OR PIPE THREAD	HOSE STEM I.D. OR THRU HOLE	USED WITH SV-MALE, STD MALE, FEMALE OR EXTENSION PLUGS
 STRAIGHT STEM	JS204SV	1/4	3/16	JP(F/B) 250 TO 253 (SV)
	JS205SV	5/16	1/4	JP(F/B) 250 TO 253 (SV)
	JS206SV	3/8	1/4	JP(F/B) 250 TO 253 (SV)
	JS306SV	3/8	1/4	JP(F/B) 351 TO 354 (SV)
	JS308SV	1/2	3/8	JP(F/B) 351 TO 354 (SV)
90° STEM	JS214SV	1/4	3/16	JP(F/B) 250 TO 253 (SV)
	JS215SV	5/16	1/4	JP(F/B) 250 TO 253 (SV)
	JS216SV	3/8	1/4	JP(F/B) 250 TO 253 (SV)
	JS316SV	3/8	1/4	JP(F/B) 351 TO 354 (SV)
	JS318SV	1/2	3/8	JP(F/B) 351 TO 354 (SV)
 45° STEM	JS224SV	1/4	3/16	JP(F/B) 250 TO 253 (SV)
	JS225SV	5/16	1/4	JP(F/B) 250 TO 253 (SV)
	JS226SV	3/8	1/4	JP(F/B) 250 TO 253 (SV)
	JS326SV	3/8	1/4	JP(F/B) 351 TO 354 (SV)
	JS328SV	1/2	3/8	JP(F/B) 351 TO 354 (SV)
 FEMALE NPT THREAD	JS200SV	1/8 NPT	1/4	JP(F/B) 250 TO 253 (SV)
	JS300SV	1/4 NPT	3/8	JP(F/B) 351 TO 354 (SV)
MALE NPT THREAD	JS201MSV	1/8 NPT	1/4	JP(F/B) 250 TO 253 (SV)
	JS302MSV	1/4 NPT	3/8	JP(F/B) 351 TO 354 (SV)

90° and 45°

(For Female and Male NPT Sockets Only)

DESCRIPTION	ITEM NUMBER	PIPE THREAD	THRU HOLE	USED WITH SOCKETS
 90° NPT ELBOW	20090	1/8 NPT	7/32	JS200 (V/SV) TO JS201M (V/SV)
	30090	1/4 NPT	5/16	JS300 (V/SV) TO JS302M (V/SV)
	50090	1/2 NPT	9/16	JS500 (V) TO JS504M (V)
 45° NPT ELBOW	20045	1/8 NPT	7/32	JS200 (V/SV) TO JS201M (V/SV)
	30045	1/4 NPT	5/16	JS300 (V/SV) TO JS302M (V/SV)
	50045	1/2 NPT	9/16	JS500 (V) TO JS504M (V)

These 90° and 45° NPT elbows can be used with either Jiffy-Tite or Jiffy-Matic, V or SV, female or male NPT sockets only.

MOLD COOLING

Jiffy-Lok® Connector Sockets



With Clampless Hose Stems for use with "Push-To-Lock" Type Hose

- For use with "Push-to-Lock" type hose only
- Saves set-up time by eliminating the need for hose clamps
- Hose stem barbs mate with "Push-to-Lock" style rubber hose
- Popular sizes for interchangeability with existing Jiffy-Tite, Jiffy-Matic and Jiffy-Matic SV Sockets
- More compact and consistently sized than competitive sockets
- Leakproof brass and stainless steel construction
- Replaceable seals and valves for long service life
- Socket connector seals are Viton

Jiffy-Lok SV-Series Valve Style* – JSL

DESCRIPTION	ITEM NUMBER	FITS HOSE I.D.	HOSE STEM I.D.	USED WITH: SV-MALE, STD. MALE, FEMALE OR EXTENSION PLUGS
 STRAIGHT STEM	JSL0204SV	¼	3/16	JP(F/B) 250 TO 253 (SV)
	JSL0206SV	3/8	¼	JP(F/B) 250 TO 253 (SV)
	JSL0306SV	3/8	¼	JP(F/B) 351 TO 354 (SV)
	JSL0308SV	½	3/8	JP(F/B) 351 TO 354 (SV)
 90° STEM	JSL0214SV	¼	3/16	JP(F/B) 250 TO 253 (SV)
	JSL0216SV	3/8	¼	JP(F/B) 250 TO 253 (SV)
	JSL0316SV	3/8	¼	JP(F/B) 351 TO 354 (SV)
	JSL0318SV	½	3/8	JP(F/B) 351 TO 354 (SV)
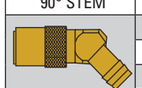 45° STEM	JSL0224SV	¼	3/16	JP(F/B) 250 TO 253 (SV)
	JSL0226SV	3/8	¼	JP(F/B) 250 TO 253 (SV)
	JSL0326SV	3/8	¼	JP(F/B) 351 TO 354 (SV)
	JSL0328SV	½	3/8	JP(F/B) 351 TO 354 (SV)

*SV-Series male plugs must be used to obtain two-way shutoff. Installation data available. Contact DME.

Jiffy-Lok Flow-Thru Style (Jiffy-Tite)

DESCRIPTION	ITEM NUMBER	FITS HOSE I.D.	HOSE STEM I.D.	USED WITH: STD. MALE, FEMALE OR EXTENSION PLUGS
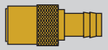 STRAIGHT STEM	JSL0204	¼	3/16	JP(F/B) 250 TO 253
	JSL0206	3/8	¼	JP(F/B) 250 TO 253
	JSL0306	3/8	¼	JP(F/B) 351 TO 354
	JSL0308	½	3/8	JP(F/B) 351 TO 354
	JSL0504	½	3/8	JP(F) 553 TO 556
	JSL0506	¾	5/8	JP(F) 553 TO 556
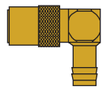 90° STEM	JSL0214	¼	3/16	JP(F/B) 250 TO 253
	JSL0216	3/8	¼	JP(F/B) 250 TO 253
	JSL0316	3/8	¼	JP(F/B) 351 TO 354
	JSL0318	½	3/8	JP(F/B) 351 TO 354
	JSL0514	½	3/8	JP(F) 553 TO 556
	JSL0516	¾	5/8	JP(F) 553 TO 556
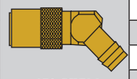 45° STEM	JSL0224	¼	3/16	JP(F/B) 250 TO 253
	JSL0226	3/8	¼	JP(F/B) 250 TO 253
	JSL0326	3/8	¼	JP(F/B) 351 TO 354
	JSL0328	½	3/8	JP(F/B) 351 TO 354
	JSL0524	½	3/8	JP(F) 553 TO 556
	JSL0526	¾	5/8	JP(F) 553 TO 556

Jiffy-Lok One-Way Valve Style (Jiffy-Matic)

DESCRIPTION	ITEM NUMBER	FITS HOSE I.D.	HOSE STEM I.D.	USED WITH: STD. MALE, FEMALE OR EXTENSION PLUGS
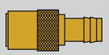 STRAIGHT STEM	JSL0204V	¼	3/16	JP(F/B) 250 TO 253
	JSL0206V	3/8	¼	JP(F/B) 250 TO 253
	JSL0306V	3/8	¼	JP(F/B) 351 TO 354
	JSL0308V	½	3/8	JP(F/B) 351 TO 354
	JSL0504V	½	3/8	JP(F) 553 TO 556
	JSL0506V	¾	5/8	JP(F) 553 TO 556
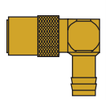 90° STEM	JSL0214V	¼	3/16	JP(F/B) 250 TO 253
	JSL0216V	3/8	¼	JP(F/B) 250 TO 253
	JSL0316V	3/8	¼	JP(F/B) 351 TO 354
	JSL0318V	½	3/8	JP(F/B) 351 TO 354
	JSL0514V	½	3/8	JP(F) 553 TO 556
	JSL0516V	¾	5/8	JP(F) 553 TO 556
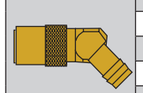 45° STEM	JSL0224V	¼	3/16	JP(F/B) 250 TO 253
	JSL0226V	3/8	¼	JP(F/B) 250 TO 253
	JSL0326V	3/8	¼	JP(F/B) 351 TO 354
	JSL0328V	½	3/8	JP(F/B) 351 TO 354
	JSL0524V	½	3/8	JP(F) 553 TO 556
	JSL0526V	¾	5/8	JP(F) 553 TO 556

Note: Use "Push-to-Lock" type hose only. Jiffy-Lok Connector Sockets are for use with water and water-based coolants only. Although Jiffy-Lok Connector Sockets are suitable for temperatures to 400°F, observe the temperature ratings of your "push-to-lock" hose. Most "push-to-lock" hoses have a temperature rating of 175°F or less. Never exceed 200 psi.

MOLD COOLING

Jiffy-Tite® Connector Seals, Seal Removal Tool Kit & Wrenches

Jiffy-Tite® Connector Seals

For Replacement in Either Jiffy-Tite or Jiffy-Matic Sockets

Jiffy-Tite and Jiffy-Matic Sockets are supplied with Viton* seals for use with air, water or heat transfer oil applications that do not exceed 400°F and 200 psi. Seals should be replaced periodically as required to ensure leak-free connections.

MAXIMUM OPERATING TEMPERATURE/PRESSURE – 400°F/200 PSI			
FOR USE WITH	SEAL MATERIAL (I.D. COLOR)	ITEM NUMBER*	USED WITH SOCKETS
AIR, WATER OR HEAT TRANSFER OIL	VITON (GREEN)	P2008	JS204(V/SV) TO 228(V/SV)
		P3008	JS306(V/SV) TO 328(V/SV)
		P5008	JS504(V) TO 526(V)

***Sold in packs of 10**

***NOTE**: It is up to the customer to verify that the use of Viton seal is compatible with the application and coolant medium being used. Viton is incompatible with highly polar chemicals, organic acids, amines, ketones, acetone, eaters and acetic acid. Other seal materials can be provided on request.

Jiffy-Tite® Seal Removal Tool Kit – JSTK

The Jiffy-Tite Seal Removal Tool Kit can be used for removal of connector seals from Jiffy-Matic Sockets (including SV Series). Can also be used with Jiffy-Tite Sockets to provide easier seal removal.



ITEM NUMBER
JSTK235

Includes handle, interchangeable tools for all socket sizes, seal pick and vinyl storage pouch.

Note: This tool kit is not required for "the original" or current line of Jiffy-Matic Sockets with removable hose stems.

MOLD COOLING

Jiffy-Tite® and Jiffy-Matic® Coolant Bridges

For Compact Mold Connection of Adjacent Plugs Without Use of Conventional Hose Loop

- Provides more compact port-to-port connections than conventional hose methods
- Coolant Bridge socket adapters allow quick connections to Jiffy-Tite (flow thru) or Jiffy-Matic (one- or two-way shutoff) plugs
- Socket adapter marked with cut-line groove for quick sizing of brass tube length
- Leakproof socket adapters have replaceable seals and valves for long service life
- Socket connector seals and O-ring seals are Viton

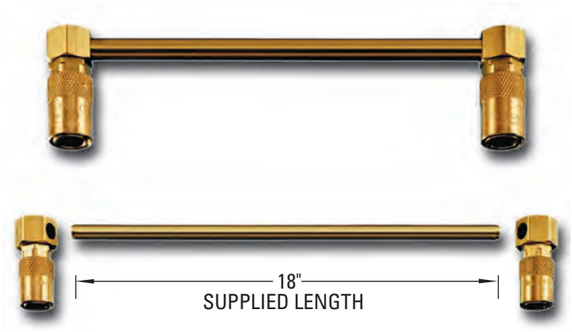

Complete assembly consists of 3 pieces. All pieces sold separately.

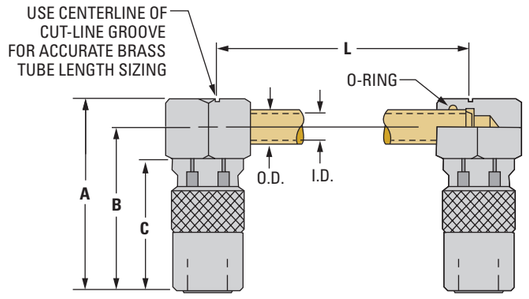

Notes:
1. Coolant Bridge consists of two socket adapters (including O-rings) and one chamfered brass tube that are sold separately.
2. Tubes are 18" long. Cut to suit for specific application using cut-line grooves. Then, chamfer and deburr tube as indicated in installation data.
3. Coolant Bridge Jiffy-Matic socket adapters will provide one-way shutoff when used with standard male, female and extension plugs and two-way shutoff when used with SV-Series Male Plugs.
4. Maximum temperature rating is 400°F. Maximum PSI rating is 200.

Installation data available. Contact DME.

Jiffy-Tite® and Jiffy-Matic® Coolant Bridges – JCB, JBT

COOLANT BRIDGE SOCKET ADAPTERS (TWO REQUIRED PER ASSEMBLY)							BRASS TUBE 18" LONG		
STYLE	ITEM NUMBER	A	B	C	L	USED WITH STD. MALE, FEMALE OR EXTENSION PLUGS	ITEM NUMBER	I.D.	O.D.
JIFFY-TITE FLOW-THRU	JCB0200	1.74	1.47	1.20	18" MAX.	JP(F/B)250 TO 253	JBT0450	.214	.312
	JCB0300	2.26	1.94	1.63	18" MAX.	JP(F/B)351 TO 354	JBT0570	.307	.437
JIFFY-MATIC ONE- OR TWO-WAY* SHUTOFF	JCB0200SV	1.74	1.47	1.20	18" MAX.	JP(F/B)250 TO 253 (SV)	JBT0450	.214	.312
	JCB0300SV	2.26	1.94	1.63	18" MAX.	JP(F/B)351 TO 354 (SV)	JBT0570	.307	.437

*SV-Series male plugs must be used to obtain two-way shutoff.

REPLACEMENT O-RINGS FOR SOCKET ADAPTERS		
ITEM NUMBER	DESCRIPTION	BAG
JCB0011	VITON O-RING FOR 200 SERIES SOCKET ADAPTER	10/PKG.
JCB0013	VITON O-RING FOR 300 SERIES SOCKET ADAPTER	10/PKG.

MOLD COOLING

Jiffy-Tite® Cascade Water Junctions

- Compact design
- 360° seal – leak proof
- Accurate predetermination of port locations
- Easy "one-piece" installation and removal

For cascade-type cooling applications, the Jiffy-Tite Cascade Water Junctions provide the utmost in versatility and ease of use. Their compact design makes them ideal for cooling inserted cores or spot cooling in hard to reach areas of molds or dies. They can be rotated a full 360° without affecting their positive Jiffy-Tite seal and are easily connected and disconnected – even when installed internally.

Final location of the ports on the body of the Water Junction can be accurately predetermined, thus ensuring proper lateral alignment with pipe clearance holes. Waterlines may be connected to the same side or opposing sides of the Water Junction. A slot on the end of the Water Junction body indicates port position and can be turned with a screwdriver to align the ports with pipe clearance holes.

The brass tube has the rigidity to maintain uniform spacing inside the water channel and is threaded into the body for firm support.



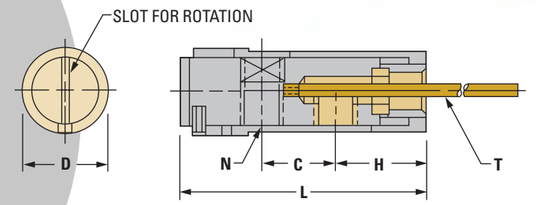

Jiffy-Tite® Cascade Water Junctions (JW)

ITEM NUMBER	D	L	C	H	N N.P.T. (3 PLACES)	T 18" LONG TUBE SUPPLIED		
						O.D.	I.D.	THREAD
JW220	.70	2.12	.69	.77	1/8	.190	.126	#10-32
JW320	.96	2.38	.69	1.03	1/8	.250	.170	1/4-28
JW321	.96	2.69	1.00	1.03	1/8	.250	.170	1/4-28
JW541	1.19	3.13	1.00	1.28	1/4	.437	.307	7/16-20

Notes:
1. Bubbler Tubes may be used as replacements in Water Junctions above.
2. The 200, 300 and 500 Series Water Junctions are equipped with 200, 300 and 500 series Viton seals respectively, rated at 200 psi and suitable for temperatures up to 400°F.

REFERENCE DIMENSIONS FOR PORT LOCATION			
WATER JUNCTION ITEM NO	MATING JIFFY-TITE PLUG	J	K
JW220	JP251	.99	.21
	JP252	1.24	.46
	JP253	1.28	.50
JW320 AND JW-21	JP352	1.48	.42
	JP353	1.51	.45
	JP354	1.63	.56
JW541	JP554	1.96	.66
	JP556	2.02	.72

Typical Applications

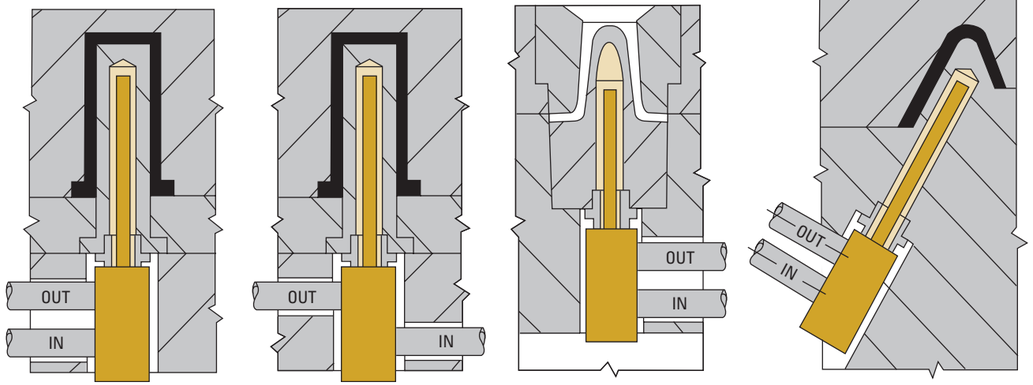

MOLD COOLING

MoldBasics® Hose Connectors

DME plugs used with DME flow-thru type Sockets and DME Automatic Shut-off Type Sockets are designed for plastics molds and die-cast dies in water, air or oil lines. They feature a combination brass and stainless steel leakproof construction, have a maximum rated capacity of 200 psi and withstand temperatures up to 400°F, with supplied Viton seals. DME Sockets can be used interchangeably with the same Plugs already in your mold or die. Comparable sizes of both sockets types have the same O.D., permitting interchangeability even when the plugs are flush mounted.



SOCKET



PLUG

Sockets (Flow-Thru Type)

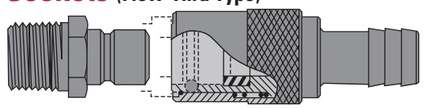

DME Flow-Thru Type Sockets have a large thru hole to provide unrestricted flow. These quick-connection couplers are available with either straight, 45° or 90° hose stems, or standard female or male NPT threads.

DME Flow-Thru and Automatic Shut-Off Type Sockets have the same O.D., permitting complete interchangeability with Plugs installed in your mold or die.

The Sockets can be used with either male, female or extension plugs.

Sockets (Automatic Shut-Off Type)

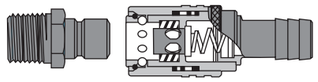

VALVE CLOSED

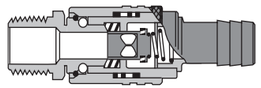

VALVE OPEN

DME Automatic Shut-off Type Sockets open automatically when connected and shut off automatically when disconnected. Unlike most valve-type connectors, DME Sockets are designed to keep flow restriction to a minimum.

FLOW-THRU SOCKETS					AUTOMATIC SHUT-OFF SOCKETS	
DESCRIPTION	ITEM NUMBER	FITS HOSE I.D. OR PIPE THREAD	HOSE STEM I.D. OR THRU HOLE	USED WITH STD MALE, FEMALE OR EXTENSION PLUGS	ITEM NUMBER	DESCRIPTION
STRAIGHT STEM	NS204	¼	¼	NS 250 to 253 (FB)	NS204V	STRAIGHT STEM
	NS205	5/16	¼	NS 250 to 253 (FB)	NS205V	
	NS206	⅜	¼	NS 250 to 253 (FB)	NS206V	
	NS306	⅜	⅜	NS 351 to 354 (FB)	NS306V	
	NS308	½	⅜	NS 351 to 354 (FB)	NS308V	
	NS504	½	½	NS 553 to 556 (FB)	NS504V	
	NS506	¾	½	NS 553 to 556 (FB)	NS506V	
90° STEM	NS214	¼	¼	NS 250 to 253 (FB)	NS214V	90° STEM
	NS215	5/16	¼	NS 250 to 253 (FB)	NS215V	
	NS216	⅜	¼	NS 250 to 253 (FB)	NS216V	
	NS316	⅜	⅜	NS 351 to 354 (FB)	NS316V	
	NS318	½	⅜	NS 351 to 354 (FB)	NS318V	
	NS514	½	½	NS 553 to 556 (FB)	NS514V	
	NS516	¾	½	NS 553 to 556 (FB)	NS516V	
45° STEM	NS224	¼	¼	NS 250 to 253 (FB)	NS224V	45° STEM
	NS225	5/16	¼	NS 250 to 253 (FB)	NS225V	
	NS226	⅜	¼	NS 250 to 253 (FB)	NS226V	
	NS326	⅜	⅜	NS 351 to 354 (FB)	NS326V	
	NS328	½	⅜	NS 351 to 354 (FB)	NS328V	
	NS524	½	½	NS 553 to 556 (FB)	NS524V	
	NS526	¾	½	NS 553 to 556 (FB)	NS526V	
FEMALE NPT THREAD	NS200	⅛ NPT	¼	NS 250 to 253 (FB)	NS200V	FEMALE NPT THREAD
	NS300	¼ NPT	⅜	NS 351 to 354 (FB)	NS300V	
	NS500	½ NPT	½	NS 553 to 556 (FB)	–	
MALE NPT THREAD	NS201M	⅛ NPT	¼	NS 250 to 253 (FB)	NS201MV	MALE NPT THREAD
	NS302M	¼ NPT	⅜	NS 351 to 354 (FB)	NS302MV	
	NS504M	½ NPT	9/16	NS 553 to 556 (FB)	NS504MV	

MOLD COOLING

MoldBasics® Hose Plugs



Male Plug



Female Plug

Male and Female Plugs

For Use with Flow-Thru or Automatic Shut-Off Sockets (Including SV Series)

DESCRIPTION	LENGTH L	PIPE THREAD	Ø HOLE	HEX SIZE	ITEM NUMBER	USED WITH SOCKETS
MALE PLUG (BRASS)	59/64	1/16 NPT	3/16	7/16	NS250	NS204(V/SV) TO NS226(V/SV)
	59/64	⅛ NPT	¼	7/16	NS251	
	1 5/32	¼ NPT	¼	9/16	NS252	
	1 3/16	⅜ NPT	¼	11/16	NS253	
	1 3/16	⅛ NPT	⅜	9/16	NS351	NS306(V/SV) TO NS328(V/SV)
	1 25/64	¼ NPT	⅜	9/16	NS352	
	1 25/64	⅜ NPT	⅜	11/16	NS353	
	1 37/64	½ NPT	⅜	⅞	NS354	
	1 9/16	⅜ NPT	7/16	⅞	NS553	NS504(V) TO NS526(V)
	1¾	½ NPT	⅝	⅞	NS554	
	1¾	¾ NPT	½	1⅛	NS556	
FEMALE PLUG** (BRASS)	1"	1/16 NPT	¼	½	NS250FB	NS204(V/SV) TO NS226(V/SV)
	1"	⅛ NPT	¼	½	NS251FB	
	1 9/32	¼ NPT	¼	⅝	NS252FB	
	1 13/32	⅜ NPT	¼	¾	NS253FB	
	1 9/32	⅛ NPT	11/32	⅝	NS351FB	NS306(V/SV) TO NS328(V/SV)
	1 31/64	¼ NPT	⅜	⅝	NS352FB	
	1 37/64	⅜ NPT	⅜	¾	NS353FB	
	1 49/64	½ NPT	⅜	15/16	NS354FB	
	1 11/16	⅜ NPT	9/16	15/16	NS553FB	NS504(V) TO NS526(V)
	1 49/64	½ NPT	⅝	15/16	NS554FB	
	1 49/64	¾ NPT	⅝	1⅛	NS556FB	

All Male Plugs (including SV-Series) and Extension Plugs are supplied with thread sealant. Eliminating the initial need for joint tape or compound, the sealant will withstand temperatures up to 400°F and pressures up to 200 psi.

Plugs

Male Plug Mounting Information

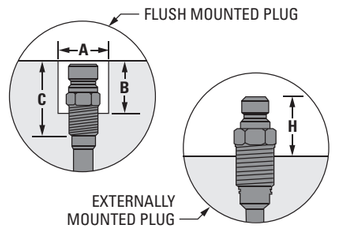

ITEM NUMBER	NPT	HEX SIZE	A	B	C	H
NS250	1/16	7/16	11/16	11/16	1"	5/8
NS251	⅛	7/16	11/16	11/16	1"	5/8
NS252(SV)	¼	9/16	27/32	15/16	1 3/16	⅞
NS253(SV)	⅜	11/16	1	15/16	1¼	29/32
NS351	⅛	9/16	1	15/16	1¼	⅞
NS352(SV)	¼	9/16	1	1 3/32	1 7/16	1 1/32
NS353(SV)	⅜	11/16	1	1⅛	1 7/16	1 1/16
NS354(SV)	½	⅞	1 3/16	1¼	1 9/16	1 3/16
NS553	⅜	⅞	1¼	1 3/16	1⅝	1⅛
NS554	½	⅞	1¼	1½	1 13/16	1 7/16
NS556	¾	1⅛	1½	1 9/16	1⅞	1½

Extension plugs can be found on page 227.

MOLD COOLING

MoldBasics® SV-Series Hose Connectors

SV-Series Connectors – NS

Two-Way Automatic Shut-Off Type



SOCKET



PLUG

The DME line of SV-Series Connectors features a male plug and socket, each with an automatic shut-off stemmed valve. These connectors are designed for use with plastics molds and die-cast dies in water, air or heat transfer oil lines. They feature a combination of brass and stainless steel in a leak-proof construction, have a maximum rated capacity of 200 psi and will withstand temperatures up to 400°F with supplied Viton seals.

The SV-Series Male Plugs add the capability of automatic shut-off at the mold, thereby minimizing coolant loss.

DME SV-Series Sockets can be used interchangeably with the plugs already in your mold or die. However, the SV-Series Male Plugs can ONLY be used with the SV-Series Sockets. Comparable sizes of both types of sockets and plugs have the same O.D., permitting interchangeability even when the plugs are flush-mounted.

The SV-Series Male Plugs are now supplied with thread sealant. Eliminating the initial need for joint tape or compound, the sealant will withstand temperatures up to 400°F and pressures up to 200 psi.

SV-Series Male Plugs

(Automatic Shut-Off Type with Stemmed Valve)

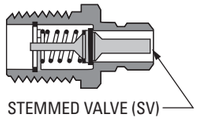

The DME SV-Series Male Plugs feature an automatic shut-off stemmed valve. This plug design adds the capability of automatic shut-off at the mold. The plug's shut-off stemmed valve minimizes mold coolant loss, thereby decreasing clean-up time and the possibility of rust occurring on the mold surface. The SV-Series Male Plug can ONLY be used with the SV-Series Socket.

SV-Series Sockets

(Automatic Shut-Off Type with Stemmed Valve)

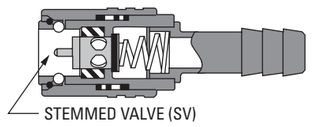

The DME SV-Series Sockets feature an automatic shut-off stemmed valve that is designed to work with the SV-Series Male Plugs, as well as the standard male, female and extension plugs. The sockets open automatically when connected and shut off automatically when disconnected. The SV-Series Sockets are designed to keep flow restriction to a minimum and are available with either straight, 45° or 90° hose stems.

Operating Combinations

Two-Way Shut-Off*

SV-SERIES* MALE PLUGS	WITH	SV-SERIES SOCKETS (EQUIVALENT SIZE)

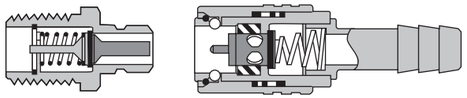

One-Way Shut-Off

STD. MALE, FEMALE OR EXTENSION PLUGS	WITH	SV-SERIES SOCKETS (EQUIVALENT SIZE)

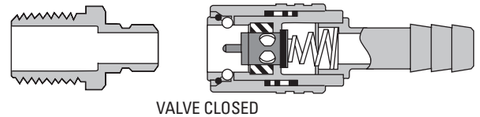

*The SV-Series Male Plugs can only be used for two-way shut-offs and must be used with the SV-Series Sockets.

DME

MOLD COOLING

MoldBasics® SV-Series Hose Connectors

SV-Series Male Plugs* – NS

(Automatic Shut-Off Type with Stemmed Valve)



SOCKET



PLUG

DESCRIPTION	LENGTH L	PIPE THREAD	Ø HOLE	HEX SIZE	ITEM NUMBER	USED WITH SOCKETS*
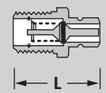 L (BRASS)	1 5/32	¼ NPT	¼	5/16	NS252SV	NS204SV to NS226SV
	1 3/16	⅜ NPT	¼	11/16	NS253SV	
	1 25/64	¼ NPT	⅜	5/16	NS352SV	NS306SV to NS328SV
	1 25/64	⅜ NPT	⅜	11/16	NS353SV	
	1 37/64	½ NPT	⅜	⅞	NS354SV	

**The SV-Series Male Plugs operate only with the SV-Series Sockets. All SV-Series Male Plugs are supplied with Viton seals for use in water, air and heat transfer oil applications that do not exceed 400°F and 200 psi.

SV-Series Sockets – NS

(Automatic Shut-Off Type with Stemmed Valve)

DESCRIPTION	ITEM NUMBER	FITS HOSE I.D. OR PIPE THREAD	HOSE STEM I.D. OR THRU HOLE	USED WITH SV-MALE, STD MALE, FEMALE OR EXTENSION PLUGS
 STRAIGHT STEM	NS204SV	¼	¼	NS250 TO 253 (SV) (FB)
	NS205SV	5/16	¼	NS250 TO 253 (SV) (FB)
	NS206SV	⅜	¼	NS250 TO 253 (SV) (FB)
	NS306SV	⅜	⅜	NS351 TO 354 (SV) (FB)
	NS308SV	½	⅜	NS351 TO 354 (SV) (FB)
 90° STEM	NS214SV	¼	¼	NS250 TO 253 (SV) (FB)
	NS215SV	5/16	¼	NS250 TO 253 (SV) (FB)
	NS216SV	⅜	¼	NS250 TO 253 (SV) (FB)
	NS316SV	⅜	⅜	NS351 TO 354 (SV) (FB)
	NS318SV	½	⅜	NS351 TO 354 (SV) (FB)
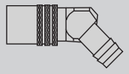 45° STEM	NS224SV	¼	¼	NS250 TO 253 (SV) (FB)
	NS225SV	5/16	¼	NS250 TO 253 (SV) (FB)
	NS226SV	⅜	¼	NS250 TO 253 (SV) (FB)
	NS326SV	⅜	¼	NS351 TO 354 (SV) (FB)
	NS328SV	½	⅜	NS351 TO 354 (SV) (FB)
 FEMALE NPT THREAD	NS200SV	⅛ NPT	¼	NS250 TO 253 (SV) (FB)
	NS300SV	¼ NPT	⅜	NS351 TO 354 (SV) (FB)
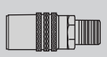 MALE NPT THREAD	NS201MSV	⅛ NPT	¼	NS250 TO 253 (SV) (FB)
	NS302MSV	¼ NPT	⅜	NS351 TO 354 (SV) (FB)

90° and 45° NPT Elbows

(For Female and Male NPT Sockets Only)

DESCRIPTION	ITEM NUMBER	PIPE THREAD	THRU HOLE	USED WITH SOCKETS
 45° NPT ELBOW	BE4S2-2	⅛ NPT	7/32	NS200 (V/SV) TO NS201M (V/SV)
	BE4S4-4	¼ NPT	5/16	NS300 (V/SV) TO NS302M (V/SV)
	BE4S8-8	½ NPT	9/16	NS500 (V) TO NS504M (V)
 90° NPT ELBOW	BE9S2-2	⅛ NPT	7/32	NS200 (V/SV) TO NS201M (V/SV)
	BE9S4-4	¼ NPT	5/16	NS300 (V/SV) TO NS302M (V/SV)
	BE9S8-8*	1/2 NPT	9/16	NS500 to NS504M (V)

These 90° and 45° NPT elbows can be used with either V or SV, female or male NPT sockets only.

MOLD COOLING

MoldBasics® Hose Connector Sockets and Replacement Connector Seals



With Clampless Hose Stems for use with Push-To-Connect/Push-To-Lock Type Hose

- For use with push-to-connect/push-to-lock type hose only
- Saves set-up time by eliminating the need for hose clamps
- Hose stem barbs mate with "Push-to-Lock" style rubber hose
- Popular sizes for interchangeability with existing and SV Sockets
- More compact and consistently sized than competitive sockets
- Leakproof brass and stainless steel construction
- Replaceable seals and valves for long service life
- Socket connector seals are Viton

Valve Style* – SVPL

DESCRIPTION	ITEM NUMBER	FITS HOSE I.D.	HOSE STEM I.D.	USED WITH: SV-MALE, STD. MALE, FEMALE OR EXTENSION PLUGS
STRAIGHT STEM	NS204SVPL	¼	¼	NS 250 TO 253 (SV)
	NS206SVPL	⅜	¼	NS 250 TO 253 (SV)
	NS306SVPL	⅜	⅜	NS 351 TO 354 (SV)
	NS308SVPL	½	⅜	NS 351 TO 354 (SV)
90° STEM	NS214SVPL	¼	¼	NS 250 TO 253 (SV)
	NS216SVPL	⅜	¼	NS 250 TO 253 (SV)
	NS316SVPL	⅜	¼	NS 351 TO 354 (SV)
	NS318SVPL	½	⅜	NS 351 TO 354 (SV)
45° STEM	NS224SVPL	¼	3/16	NS 250 TO 253 (SV)
	NS226SVPL	⅜	¼	NS 250 TO 253 (SV)
	NS326SVPL	⅜	¼	NS 351 TO 354 (SV)
	NS328SVPL	½	⅜	NS 351 TO 354 (SV)

*SV-Series male plugs must be used to obtain two-way shutoff. Installation data available. Contact DME.

Flow-Thru Style – PL

DESCRIPTION	ITEM NUMBER	FITS HOSE I.D.	HOSE STEM I.D.	USED WITH: STD. MALE, FEMALE OR EXTENSION PLUGS
STRAIGHT STEM	NS204PL	¼	¼	NS 250 TO 253 (FB)
	NS206PL	5/16	¼	NS 250 TO 253 (FB)
	NS306PL	⅜	¼	NS 351 TO 354 (FB)
	NS308PL	½	⅜	NS 351 TO 354 (FB)
	NS504PL	½	⅜	NS 553 TO 556 (FB)
	NS506PL	½	7/16	NS 553 TO 556 (FB)
90° STEM	NS214PL	¼	¼	NS 250 TO 253 (FB)
	NS216PL	⅜	¼	NS 250 TO 253 (FB)
	NS316PL	⅜	⅜	NS 351 TO 354 (FB)
	NS318PL	½	⅜	NS 351 TO 354 (FB)
	NS514PL	⅜	⅜	NS 553 TO 556 (FB)
	NS516PL	¾	½	NS 553 TO 556 (FB)
45° STEM	NS224PL	¼	¼	NS 250 TO 253 (FB)
	NS226PL	⅜	¼	NS 250 TO 253 (FB)
	NS326PL	⅜	⅜	NS 351 TO 354 (FB)
	NS328PL	½	⅜	NS 351 TO 354 (FB)
	NS524PL	½	½	NS 553 TO 556 (FB)
	NS526PL	¾	½	NS 553 TO 556 (FB)

One-Way Valve Style – VPL

DESCRIPTION	ITEM NUMBER	FITS HOSE I.D.	HOSE STEM I.D.	USED WITH: STD. MALE, FEMALE OR EXTENSION PLUGS
STRAIGHT STEM	NS204VPL	¼	¼	NS 250 TO 253 (FB)
	NS206VPL	⅜	¼	NS 250 TO 253 (FB)
	NS306VPL	⅜	⅜	NS 351 TO 354 (FB)
	NS308VPL	½	⅜	NS 351 TO 354 (FB)
	NS504VPL	½	½	NS553 TO 556 (FB)
	NS506VPL	¾	½	NS 553 TO 556 (FB)
90° STEM	NS214VPL	¼	¼	NS 250 TO 253 (FB)
	NS216VPL	⅜	¼	NS 250 TO 253 (FB)
	NS316VPL	⅜	⅜	NS 351 TO 354 (FB)
	NS318VPL	½	⅜	NS 351 TO 354 (FB)
	NS514VPL	½	½	NS 553 TO 556 (FB)
	NS516VPL	¾	½	NS 553 TO 556 (FB)
45° STEM	NS224VPL	¼	¼	NS 250 TO 253 (FB)
	NS226VPL	⅜	¼	NS 250 TO 253 (FB)
	NS326VPL	⅜	⅜	NS 351 TO 354 (FB)
	NS328VPL	½	⅜	NS 351 TO 354 (FB)
	NS524VPL	½	½	NS 553 TO 556 (FB)
	NS526VPL	¾	½	NS 553 TO 556 (FB)

Note: Use "Push-to-Lock" type hose only. Connector Sockets are for use with water and water-based coolants only. Although Connector Sockets are suitable for temperatures to 400°F, observe the temperature ratings of your "push-to-lock" hose. Most "push-to-lock" hoses have a temperature rating of 175°F or less. Never exceed 200 psi.

Replacement Connector Seals

Sockets are supplied with Viton seals for use with air, water or heat transfer oil applications that do not exceed 400°F and 200 psi. Seals should be replaced periodically as required to ensure leak-free connections.

MAXIMUM OPERATING TEMPERATURE/PRESSURE = 400°F/200 PSI			
FOR USE WITH	SEAL MATERIAL (I.D. COLOR)	ITEM NUMBER*	USED WITH SOCKETS
AIR, WATER OR HEAT TRANSFER OIL	VITON (GREEN)	VW200-12	NS204 (V/SV) TO 226 (V/SV)
		VW300-12	NS306 (V/SV) TO 328 (V/SV)
		VW500-12	NS504 (V) TO 524 (V)

***Packs of 12 (sold in packs of 12 only).**

MOLD COOLING

Bubbler Tubes, Brass Diverting Plugs and Rods

Bubbler Tubes

- Available in brass or 304 stainless steel



DME Bubbler Tubes are used for cooling cores in molds or dies. They are supplied threaded at both ends, thus permitting two threaded tubes to be cut from the 18" length supplied. They can be used as replacement tubes in Cascade Water Junctions.

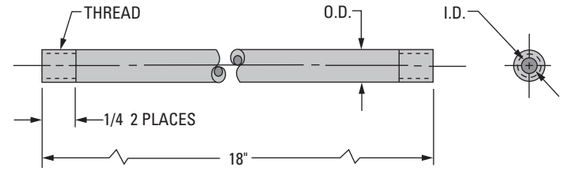

Brass Bubbler Tubes – BT

ITEM NUMBER	O.D.	I.D.	THREAD	Ø CHANNEL
BT105	.125	.069	NO. 5-44	.144
BT210	.190	.126	NO. 10-32	.228
BT340	.250	.170	1/4-28	.302
BT450	.312	.214	5/16-24	.377
BT570	.437	.307	7/16-20	.531

304 Stainless Steel Bubbler Tubes – BTS

ITEM NUMBER	O.D.	I.D.	THREAD	Ø CHANNEL
BTS100	.093	.078	NONE*	.120
BTS105	.125	.069	NO. 5-44	.144
BTS210	.190	.126	NO. 10-32	.228
BTS340	.250	.170	1/4-28	.302
BTS450	.312	.214	5/16-24	.377
BTS570	.437	.307	7/16-20	.531

*Press fit

Typical Applications

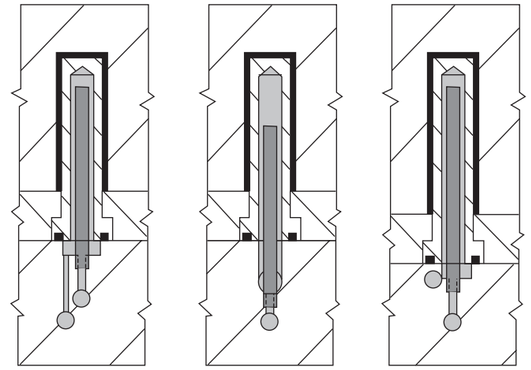



Brass Diverting Plugs and Rod for Steam and Waterlines

DME Brass Diverting Plugs and Rods are used to redirect water flow through waterlines drilled in a mold or die.

The plugs are pushed into the waterline, and the rods are cut to appropriate lengths to serve as spacers or stops between the plugs. All plugs are proportionately longer than their diameter to ensure that they will pass by intersecting waterlines without twisting into them.

Typical Application

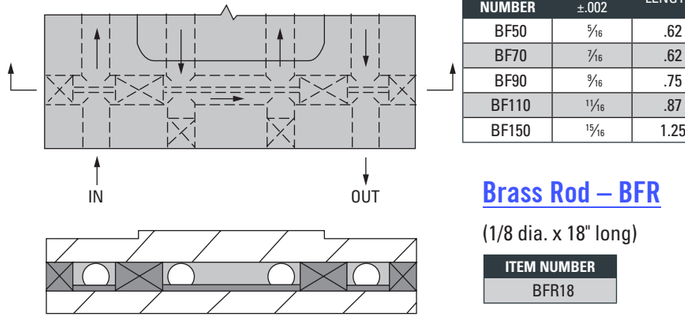

Brass Diverting Plugs – BF

ITEM NUMBER	DIA ±.002	LENGTH
BF50	5/16	.62
BF70	7/16	.62
BF90	9/16	.75
BF110	11/16	.87
BF150	15/16	1.25

Brass Rod – BFR

(1/8 dia. x 18" long)

ITEM NUMBER
BFR18

MOLD COOLING

Cascade Water Junctions

DME Cascade Water Junctions are ideal for cooling plastics molds and die-cast dies where drilled waterlines through the block are not possible due to interference with ejector pins, sprue puller pins, etc.

The brass tube has the rigidity to maintain uniform spacing inside the water channel and is threaded into the body for firm support. Waterlines may be connected to the same side or opposing sides of the brass hexagonal body.

The Nipple Type Water Junction provides low-cost rigid installation. The 2" long pipe nipple can be replaced with a longer pipe nipple to suit the application.

The Jiffy-Tite Socket Type is more easily connected and disconnected when mold is set-up, transported or stored. The socket is equipped with internal Viton seals (P3008).

Note: Bubbler Tubes may be used as replacements in Water Junctions.



NIPPLE TYPE

Nipple Type – DC (Includes pipe nipple and brass bubbler tube)

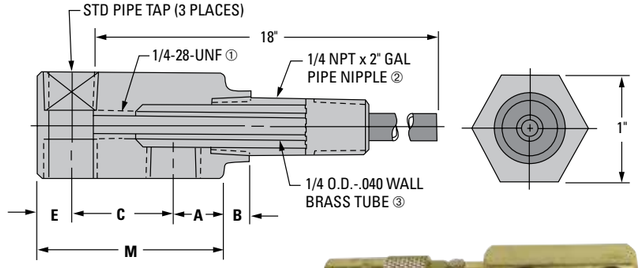



JIFFY-TITE SOCKET TYPE

Jiffy-Tite Socket Type – JSC (Includes brass bubbler tube)

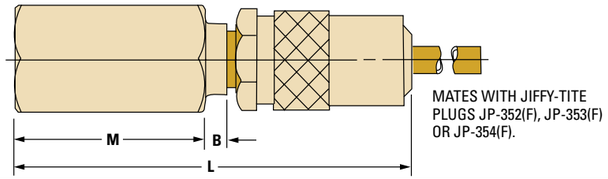

NIPPLE TYPE ITEM NUMBER	STD. PIPE TAP (3 PLACES)	M	E	A	B	C	L	JIFFY-TITE SOCKET TYPE ITEM NUMBER
DC131	⅛	1.34	.33	.33	.22	.69	—	—
DC131A	¼	1.34	.33	.33	.22	.69	3.29	JSC304
DC132	⅛	1.84	.34	.50	.25	1.00	—	—
DC132A	¼	1.84	.34	.50	.25	1.00	3.82	JSC314
DC136A*	¼	1.84	.34	.50	.25	1.00	—	—

*SPECIFICATIONS for DC136A (see drawing above): ① 5/16-24 UNF ② 3/8 NPT x 2" ③ 5/16 O.D. - .040 WALL

Typical Applications

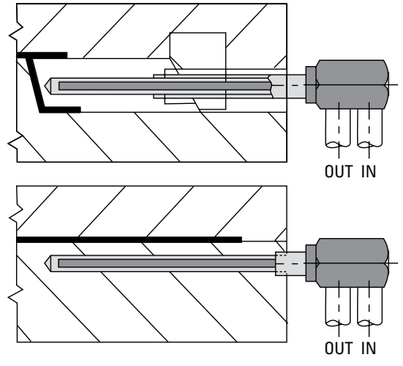

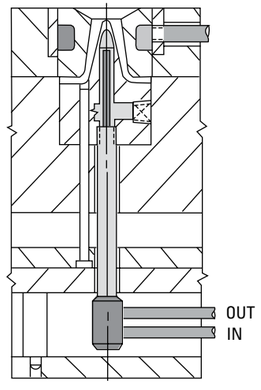

MOLD COOLING

Brass Pressure Plugs

Threadless Brass Pressure Plugs (INCH) – TBP

- Seals even in rough or corroded holes
- No tapping required
- Withstands pressures up to 72 psi



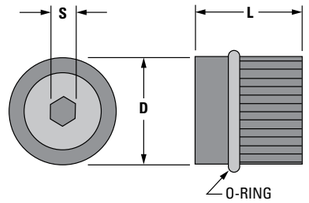

DME Threadless Brass Pressure Plugs employ a time-saving expandable O-ring design. As the plug's socket head screw is tightened, the O-ring expands to provide a positive seal. No tapping is required and installation or removal is quick and easy. The smaller diameters are ideal for use in cavity inserts or slide blocks where space is limited. **(Not recommended for use in oil lines.)**

ITEM NUMBER	NOMINAL SIZE	LENGTH L	HEX SIZE S	DRILL SIZE D	VITON REPLACEMENT O-RINGS (PKG. OF 10)
TBP10	⅛	.50	5/64	11/32	RCV0009
TBP10OS	⅛	.50	5/64	23/64	RCV0009
TBP20	¼	.56	⅛	7/16	RCV0011
TBP20OS	¼	.56	⅛	29/64	RCV0011
TBP40	⅜	.62	⅛	9/16	RCV0110
TBP40OS	⅜	.62	⅛	37/64	RCV0110
TBP60	½	.62	⅛	11/16	RCV0112
TBP60OS	½	.62	⅛	45/64	RCV0112

Note: O-ring material is suitable for use with temperatures up to 200°F.

TYPICAL APPLICATIONS

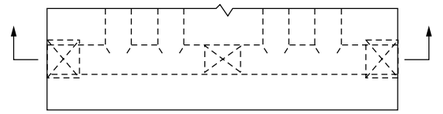

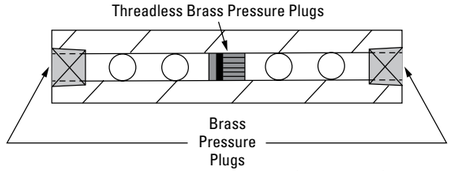

Brass Pressure Plugs (INCH) – BP



- For steam, water or oil lines
- Positive tapered seal
- Withstands pressures up to 600 psi

DME Brass Pressure Plugs give a high-pressure seal through a deliberate difference of taper between the plug and the tapped hole. Flush seating is achieved through closer control of thread forms, sizes and taper.

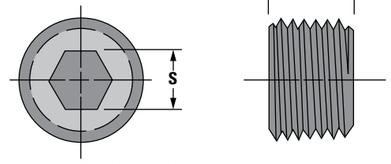

HIGH-PRESSURE SEAL
Dryseal thread form with 7/8 taper per foot. Install in standard 3/4 TPF tapped hole.

ITEM NUMBER	NOMINAL SIZE (NPT)	LENGTH L	HEX SIZE S	THREADS TAP INCH	TAP DRILL
BP10	⅛	.250	3/16	27	21/64
BP20	¼	.406	¼	18	27/64
BP40	⅜	.406	5/16	18	9/16
BP60	½	.531	⅜	14	11/16
BP100	¾	.531	9/16	14	57/64
BP140	1	.656	⅝	11-½	1-⅛

Brass Pressure Plugs (Metric) – AN



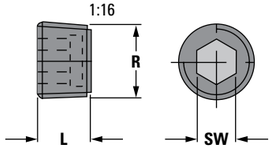

ITEM NUMBER	R	L	SW
AN8	⅛" BSPT	8	5
AN4	¼" BSPT	10	7
AN3	⅜" BSPT	10	8
AN10	M 10 X 1	8	5
AN2	½" BSPT	10	10

MOLD COOLING

Benefits of Turbulent Flow Plastic Baffles

Improve mold cooling performance over traditional brass baffles



Turbulent Flow Plastic Baffles Benefits

- Patented side wipers prevent coolant blow-by, ensuring coolant flow to the end of baffles
- Results in better cooling of targeted hot spots
- Dramatically improves cooling time
- Increases coolant flow velocity and lowers Delta "T" across mold surface
- Built-in ribs encourage turbulent flow and reduce stagnant laminar flow
- Turbulent flow dissipates about 3x the BTUs as compared to laminar flow
- Non-hygroscopic, glass-reinforced engineering thermoplastic (polypthalamide) excels under high heat, providing better temperature stabilization
- Pre-wrapped with TPFE tape
- Maximum coolant temperature recommended: 100°C (212°F)

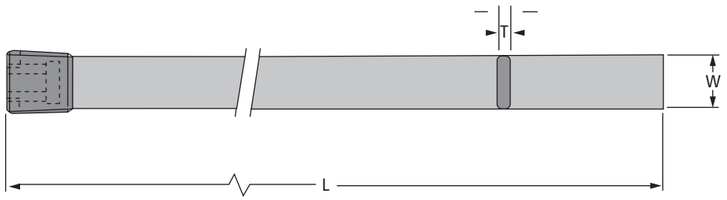

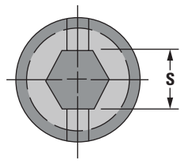

Slot indicates baffle position

Turbulent Flow Plastic Baffles (INCH) – PBF

ITEM NUMBER	NOMINAL PLUG SIZE	S HEX SIZE	L NOMINAL OVERALL LENGTH	T BAFFLE THICKNESS	W BAFFLE WIDTH	DRILL SIZE
PBF0125-04	⅛	3⁄16	4"	1⁄16	5⁄16	5⁄16
PBF0125-08	⅛	3⁄16	8"	1⁄16	5⁄16	5⁄16
PBF0250-05	¼	¼	5"	3⁄32	7⁄16	7⁄16
PBF0250-10	¼	¼	10"	3⁄32	7⁄16	7⁄16
PBF0375-06	⅜	5⁄16	6"	3⁄32	9⁄16	9⁄16
PBF0375-12	⅜	5⁄16	12"	3⁄32	9⁄16	9⁄16
PBF0500-08	½	⅜	8"	3⁄32	11⁄16	11⁄16
PBF0500-16	½	⅜	16"	3⁄32	11⁄16	11⁄16
PBF0750-12	¾	9⁄16	12"	⅛	15⁄16	15⁄16
PBF0750-24	¾	9⁄16	24"	⅛	15⁄16	15⁄16
PBF1000-12	1	⅝	12"	3⁄16	1 1⁄8	1 ⅛
PBF1000-24	1	⅝	24"	3⁄16	1 ⅛	1 ⅛

MOLD COOLING

Guidelines to Efficient Water Cooling

- Ensure good coolant flow rates (Reynolds number of 4000 minimum. See Reference Table below.)
- The golden rule for optimum cooling is to maximize GPM (gallons per minute). DME recommends in-line coolant flow meter usage. In-line coolant flow meters are available from DME Industrial Supplies
- Coolant feed channels should be the same size or larger than the calculated coolant channel
- Keep coolant channels clean with filtering and scheduled channel maintenance to de-scale coolant channels
- Use parallel cooling versus series cooling, as appropriate
- Minimize restrictions within cooling circuit

Typical Applications

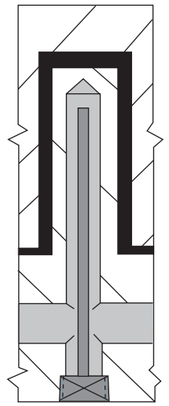

Reynolds Number

In fluid mechanics, the Reynolds number is the ratio of inertial forces to viscous forces and quantifies the relative importance of these two types of forces for given flow conditions.

Turbulent Flow Reference Table

APPROXIMATE MINIMUM FLOW (in gallons per minute)		
PIPE SIZE NPT	DRILLED PASSAGE I.D. INCHES	FLOW RATE GPM
⅛ NPT	0.250"	0.33
⅛ NPT	0.339"	0.44
¼ NPT	0.438"	0.55
⅜ NPT	0.593"	0.74
½ NPT	0.719"	0.9
¾ NPT	0.938"	1.17
1 NPT	1.156"	1.44

Approximate Minimum Flow (in gallons per minute) required for turbulent flow in drilled water passages based on a Reynolds number of 4000.

How to Check Coolant Flow Rate

- Remove the exit hose from a mold-cooling channel and fill a 1- or 5-gallon container while measuring the amount of time it takes to fill the container.
- Calculate the amount of coolant that flowed through the exit hose into the container.
  - For example, filling a 5-gallon container in 8 minutes is a flow rate of .625 gallons per minute (5 over 8 or 5/8 = .625)
  - .625 gallons per minute is a very good flow rate for a 1/4 NPT cooling channel. However, this would NOT be turbulent flow for a 3/8 NPT flow channel.
- Additionally, many other factors influence the cooling process, including coolant channel placement, distance the cooling channels are from the cavity or core molding surface, distance between each cooling channel, and the number of cooling channels.
- Furthermore, if water deposits such as lime and other hard water mineral deposits are allowed to accumulate, the walls of the cooling channels will become insulated. Turbulent flow is less beneficial under these conditions.
  - Practice filtering the coolant along with regularly scheduled coolant channel maintenance to de-scale coolant channels.
- Mold materials also play a significant role in cooling time. For example, replacing 420 Stainless Steel cores with a Copper Alloy such as Moldstar (as supplied by DME) can significantly reduce cycle time.
- Lastly, remember that regular cooling channel maintenance and turbulent water flow rates for the size of the cooling channels will have an enormous effect on the mold's cooling capacity.

MOLD COOLING

Straight Brass Plug Baffles

DME Brass Plug Baffles, available in both straight and spiral styles, are constructed entirely of high-quality brass with blades brazed to the plugs for long, dependable service. They provide a high-pressure seal through a deliberate difference of taper between the plug and the tapped hole.

The function of the baffle is to split the drilled waterline into two equal channels. As the heating or cooling medium enters, the baffle diverts the flow to travel up to and over the end of the baffle and down the other side.

Clearance must be provided between the end of the baffle and the end of the drilled channel to provide adequate flow. See Dimension "C" for approximate clearances.

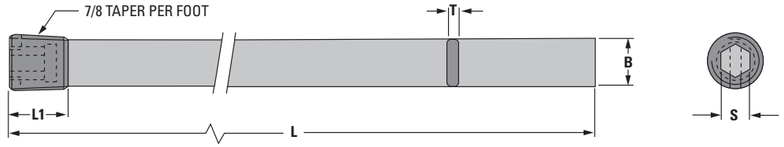

Straight Baffles



Straight Brass Plug Baffles (INCH) – BB

ITEM NUMBER	NOMINAL PLUG SIZE	S HEX SIZE	L NOMINAL LENGTH OVERALL	T BAFFLE THICKNESS	DRILL SIZE	C	B BAFFLE WIDTH +.000 -.010	L1
BB054	1/16	5/32	4"	.050	1/4	.10	.245	.250
BB058	1/16	5/32	8"	.050	1/4	.10	.245	.250
BB104	1/8	3/16	4"	1/16	5/16	.12	.307	.250
BB108	1/8	3/16	8"	1/16	5/16	.12	.307	.250
BB205	1/4	1/4	5"	3/32	7/16	.17	.432	.406
BB2010	1/4	1/4	10"	3/32	7/16	.17	.432	.406
BB406	3/8	5/16	6"	3/32	9/16	.21	.557	.406
BB4012	3/8	5/16	12"	3/32	9/16	.21	.557	.406
BB608	1/2	3/8	8"	3/32	11/16	.26	.682	.531
BB6016	1/2	3/8	16"	3/32	11/16	.26	.682	.531
BB10012	3/4	9/16	12"	1/8	15/16	.35	.932	.531
BB10020	3/4	9/16	20"	1/8	15/16	.35	.932	.531
BB14016	1	5/8	16"	1/8	1 1/8	.42	1.120	.656
BB14024	1	5/8	24"	1/8	1 1/8	.42	1.120	.656

Thread Size

THREAD LENGTHS	
NOMINAL PLUG SIZE	THREAD LENGTH +.000 -.015
1/16 & 1/8	.250
1/4 & 3/8	.406
1/2 & 3/4	.531
1"	.656

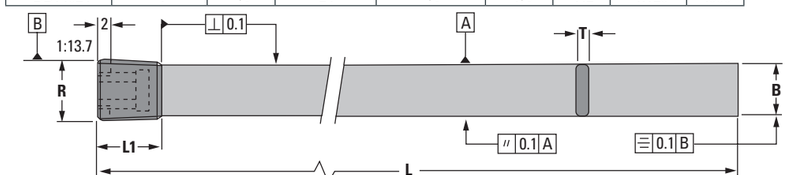

Note: A drilled hole (finish d^{H13}) is adequate. Don't ream the hole.

Straight Brass Plug Baffles (METRIC) – BB

ITEM NUMBER	R	SW	B	L	L1	T	D
BB10018	1/8" BSPT	5	8.2	100	8	2.0	8.5
BB20018	1/8" BSPT	5	8.2	200	8	2.0	8.5
BB12514	1/4" BSPT	6	11.2	125	10	2.5	11.5
BB25014	1/4" BSPT	6	11.2	250	10	2.5	11.5
BB15038	3/8" BSPT	8	14.7	150	10	2.5	15.0
BB30038	3/8" BSPT	8	14.7	300	10	2.5	15.0
BB20012	1/2" BSPT	10	18.2	200	10	2.5	18.5
BB40012	1/2" BSPT	10	18.2	400	10	2.5	18.5
BB30034	3/4" BSPT	12	23.2	300	12	3.0	23.5
BB50034	3/4" BSPT	12	23.2	500	12	3.0	23.5

Typical Applications

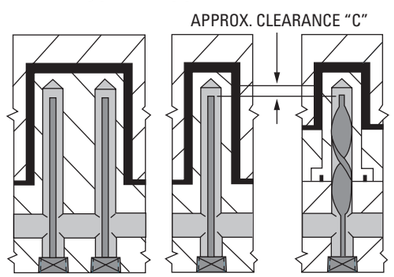

MOLD COOLING

Spiral Brass Plug Baffles

Spiral Baffles

Spiral baffles improve cooling balance by creating turbulent action in the channel, reducing laminar or straight-layered flow patterns and providing efficient coolant movement.

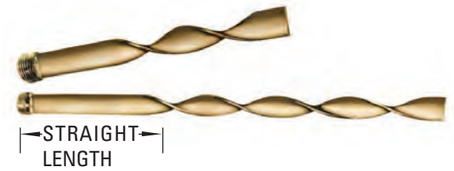

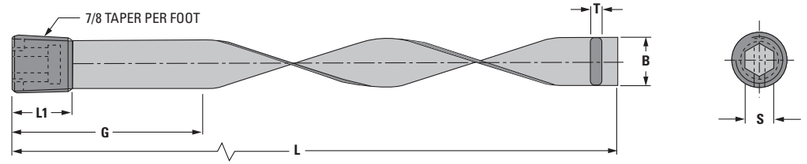

Spiral Brass Plug Baffles (INCH) – BBS

ITEM NUMBER	NOMINAL PLUG SIZE	S HEX SIZE	L NOMINAL LENGTH OVERALL	G STRAIGHT LENGTH	T BAFFLE THICKNESS	DRILL SIZE	C	B BAFFLE WIDTH +.000 -.010	L1
BBS0504	1/16	5/32	4"	2"	.050	1/4	.10	.245	.250
BBS0508	1/16	5/32	8"	4"	.050	1/4	.10	.245	.250
BBS1004	1/8	3/16	4"	2"	1/16	5/16	.12	.307	.250
BBS1008	1/8	3/16	8"	4"	1/16	5/16	.12	.307	.250
BBS2005	1/4	1/4	5"	2"	3/32	7/16	.17	.432	.406
BBS2010	1/4	1/4	10"	4"	3/32	7/16	.17	.432	.406
BBS4006	3/8	5/16	6"	2"	3/32	9/16	.21	.557	.406
BBS4012	3/8	5/16	12"	4"	3/32	9/16	.21	.557	.406
BBS6008	1/2	3/8	8"	3"	3/32	11/16	.26	.682	.531
BBS6016	1/2	3/8	16"	5"	3/32	11/16	.26	.682	.531
BBS10012	3/4	9/16	11 7/8	4"	1/8	15/16	.35	.932	.531
BBS10020	3/4	9/16	19 3/8	6"	1/8	15/16	.35	.932	.531
BBS14016	1	5/8	15 3/8	5"	1/8	1 1/8	.42	1.120	.656
BBS14024	1	5/8	23 3/8	8"	1/8	1 1/8	.42	1.120	.656

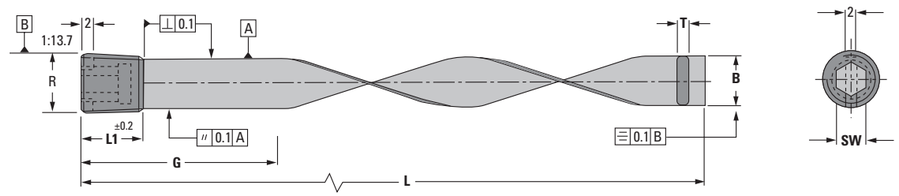

Spiral Brass Plug Baffles (METRIC) – BBS

Note: A drilled hole (finish $d1^{H13}$) is adequate. Don't ream the hole.

ITEM NUMBER	R	G	SW	B	L	L1	T	D1
BBS100116	1/16" BSPT	51	4	6.5	101	8	1.6	6.8
BBS200116	1/16" BSPT	102	4	6.5	203	8	1.6	6.8
BBS10018	1/8" BSPT	51	5	8.5	101	8	1.6	8.8
BBS20018	1/8" BSPT	102	5	8.5	203	8	1.6	8.8
BBS12514	1/4" BSPT	51	7	11.5	127	10	2.4	11.8
BBS25014	1/4" BSPT	102	7	11.5	254	10	2.4	11.8
BBS15038	3/8" BSPT	51	8	15.0	152	10	2.4	15.3
BBS30038	3/8" BSPT	102	8	15.0	305	10	2.4	15.3
BBS20012	1/2" BSPT	76	10	18.5	203	10	2.4	18.8
BBS40012	1/2" BSPT	127	10	18.5	406	10	2.4	18.8
BBS30034	3/4" BSPT	102	12	23.5	305	12	3.2	23.8
BBS50034	3/4" BSPT	153	12	23.5	508	12	3.2	23.8
BBS4001	1" BSPT	127	12	28.5	406	12	3.2	28.8
BBS6001	1" BSPT	203	12	28.5	610	12	3.2	28.8

MOLD COOLING

Heat Pipes - Cooling Pins

How and where heat pipes work

The DME Heat Pipe is a heat transfer device specifically designed for optimal performance in plastic injection molds. It consists of a vacuum-tight copper tube containing a wick and a non-toxic working fluid. One end of the heat pipe is an evaporator, the opposite end is a condenser. Thermal energy is gathered at the evaporator end, vaporizing the working fluid. This vapor then travels through the Heat Pipe to the condenser end. At the condenser end the vapor condensates back into a liquid, giving up its latent heat in the process. To complete the cycle the condensed liquid then travels along the wick, via capillary action, back to the evaporator section. This process repeats itself continuously, transferring heat many times faster than pure copper.

How heat pipes are used

Available in a variety of standard lengths and diameters, DME Heat Pipes are used in cores, core slides, cavities and other areas of a mold or die requiring cooling or controlled temperatures. Commonly used in place of bubblers, baffles, fountains or blades, Heat Pipes transfer heat rapidly to the coolant, rather than requiring the coolant to flow into the heated area. They are also used to transfer heat to a cooler portion of the mold (which serves as a heat sink) or to open air, thereby permitting cooling of otherwise inaccessible areas and eliminating potential coolant leakage.

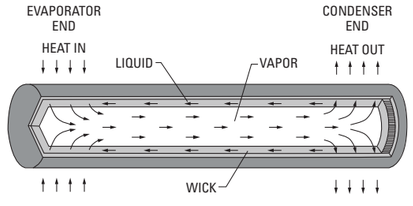

Standard injection molding heat pipes

The standard line of Heat Pipes for injection molding includes both a low-temperature (TPL) and a high-temperature (TPH) series. The TPL Series works most efficiently between the temperatures of 40˚ and 200˚F with a coolant temperature of approximately 60˚ to 80˚F, and the TPH Series between 150˚ and 400˚F with a coolant temperature of approximately 90˚ to 110˚F. The sealed end of each heat conductor is color-coded (BLACK for the TPL series and WHITE for the TPH Series). Selection of the appropriate series is based on the application's melt, mold surface and coolant temperatures to which the Heat Pipe will be subjected.



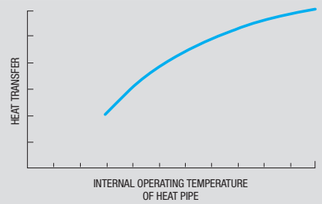

MAXIMIZING EFFICIENCY WITH WARM COOLANT

Heat Pipes work best when the coolant is between 60° and 110°F, and sometimes higher. The graph illustrates how the Heat Pipe's heat transfer capability is dependent upon its internal operating temperature. It is best to start with the coolant temperature high, then reduce it if necessary.

Benefits of heat pipes

Cool Molds Faster and Reduce Cycle Time

The Heat Pipe's ability to cool molds faster and thus reduce cycle time is due to a number of factors. First, waterlines throughout the entire mold can be larger in diameter, permitting a higher coolant velocity, which transfers heat faster. Second, the larger volume of fluid flowing through the waterline results in a lower overall coolant temperature rise, so that the last Heat Pipe in the system will transfer heat as efficiently as the first. Third, the extension of the Heat Pipe into the waterline promotes turbulent flow, which transfers heat faster than laminar flow. Fourth, the ability to transfer heat away from inaccessible areas improves the overall cooling rate and reduces cycle time, even if extension into a remote waterline is impractical or impossible.

Improve Part Quality

As the Heat Pipe transfers heat to the coolant, air or mold component, it also dissipates heat evenly along its entire length. This isothermal action provides faster and more uniform cooling, thus eliminating hot spots, which cause sink marks, pulling and spotting.

Simplify Mold Design and Lower Costs

With Heat Pipes, waterline design is greatly simplified since coolant flow into the heated area of the mold is not required. In addition, the ability to locate heat conductors in areas inaccessible to other cooling devices can further simplify the overall mold design. In most cases, the machining and construction time required for the mold is reduced, lowering moldmaking costs.

MOLD COOLING

Heat Pipes - Cooling Pins

Reduce Maintenance and Operating Costs

The increased waterline diameter, coolant velocity and heat capacity effectively eliminate scale formation, calcium deposits and the plugging up of small waterlines and ports. In addition, Heat Pipes operate in any coolant without corroding.

Upgrade Existing Molds and Dies

Heat Pipes effectively solve cooling, cycle time or part quality problems in existing molds. They can be retrofitted as replacements for bubblers or baffles and to provide heat transfer in previously uncooled areas.

Salvage Damaged Molds and Dies

In certain applications, Heat Pipes can even be used to salvage or repair molds that would otherwise have to be scrapped or extensively reworked.

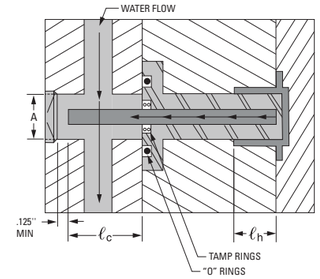

Selecting the right size and shape

The standard diameters and lengths of TPL and TPH Series Heat Pipes will satisfy most applications.

TPL & TPH SERIES	TOLERANCES
Diameter (O.D.)	±.004
Length	±.020

NOTE: Heat Pipes cannot be used as ejector pins and parts cannot be molded or cast against them. Also, Heat Pipes cannot be cut, machined, bent or plated. If a special size is required, contact DME to discuss your application.

TPL and TPH heat pipes for injection molding

For low-temperature Heat Pipes (40˚-200˚F) use TPL (color-coded BLACK) as a prefix in front of item number in the chart below. For high-temperature Heat Pipes (150˚-400˚F) use TPH (color-coded WHITE) as the prefix. Examples: TPL8600; TPH6500.

LENGTH (INCHES)	TPL & TPH DIAMETER & ITEM NUMBER					
	⅛	3⁄16	¼	5⁄16	⅜	½
3	4300	6300	8300	10300	12300	16300
4	4400	6400	8400	10400	12400	16400
5	4500	6500	8500	–	–	–
6	4600	6600	8600	10600	12600	16600
7	4700	6700	8700	–	–	–
8	4800	6800	8800	10800	12800	16800
10	–	–	–	101000	121000	161000
12	–	–	–	–	–	161200

Silver heat transfer compound* –HTC06S

ITEM NUMBER
HTC06S

Contains micronic particles of silver to provide a thermal resistance of 4.75°C in/watt. The compound is supplied in a 5cc plastic syringe. (DME recommends the Silver Heat Transfer Compound because it has eight times lower thermal resistance than the copper equivalent.)

Copper heat transfer compound* – HTC30C

ITEM NUMBER
HTC30C

Contains micronic particles of copper to provide a thermal resistance of 38°C in/watt. The compound is supplied in a 5cc plastic syringe.

* For .125" diameter Heat Pipes, do not use applicator tube supplied with Heat Transfer Compound. Apply desired amount of compound directly into core hole.

Tamp ring sets – TARS

Each set includes 32 silver alloy tamp rings (enough for installing 16 Heat Pipes) and one hollow tamping tube. Select the required tamp ring set by its I.D. to match the O.D. of the Heat Pipe being used.

ITEM NUMBER	TARS-04	TARS-06	TARS-08	TARS-10	TARS-12	TARS-16
Ring I.D.	⅛	3⁄16	¼	5⁄16	⅜	½

MOLD COOLING

High-Temperature Insulator Sheets and Locating Rings

High-Temperature Insulator Sheets (HTIS) for Plastics Molds and Die-Cast Dies

- Asbestos-free material
- High compression strength
- Machinable with high-speed cutting tools

DME High-Temperature Insulator Sheets are used on molds and dies between the top clamping plate and the stationary platen, and between the bottom of the ejector housing and the movable platen. The thermal insulating properties of this unique asbestos-free, glass-reinforced polymer composite inhibit heat transfer from the mold to the platen, or from the platen to the mold (depending on the application), which helps conserve energy and prolong machine life. These sheets have excellent non-deformation characteristics and a compressive strength,* which is higher than asbestos and mica materials. Compression molded for high impact strength, they are supplied micro-finished top and bottom, parallel within ±.002.

*49,400 psi at 75°F

ENERGY SAVINGS
¼ THICK = 27,508 BTU/HR
½ THICK = 31,004 BTU/HR

General Data

COMPRESSIVE STRENGTH	(ASTM D-229)	49,400 PSI AT 75°F 27,200 PSI AT 300°F 18,000 PSI AT 400°F 17,100 PSI AT 500°F 15,000 PSI AT 550°F
MODULUS OF ELASTICITY IN COMPRESSION	(ASTM D-229	1.8 X 10^6 PSI AT 75°F 2.9 X 10^6 PSI AT 425°F
WATER ABSORPTION	(ASTM D-229)	0.2%
THERMAL CONDUCTIVITY (K FACTOR), (BTU/HR/FT²/IN/°F)	(ASTM C-177)	1.9 AT 75°F 2.1 AT 425°F
FLAME RESISTANCE	(UL SUBJECT 94)	94V-0
EXPANSION ACROSS THICKNESS EXPANSION ACROSS SURFACE		6.43 X 10^{-5} IN/IN/°F 1.24 X 10^{-5} IN/IN/°F
MAXIMUM RECOMMENDED SERVICE TEMPERATURE		550°F

High-Temperature Insulator Sheets – HTIS

THICKNESS ±.010	LENGTH ±.06	WIDTH ±.06	ITEM NUMBER	NET WEIGHT
¼	36"	18"	HTIS18362	12
		24"	HTIS24362	16
		36"	HTIS36362	24
¼	96"	48"	HTIS48962	105
½	36"	18"	HTIS18364	24
		24"	HTIS24364	32
		36"	HTIS36364	48
½	96"	48"	HTIS48964	210

Note: Special sizes available on special order: Max. length = 96", Max thickness = 1", Max. width = 48", Min. thickness = ⅛
Installation: Use ¼-20 flat head screws. Drill and tap base to suit.

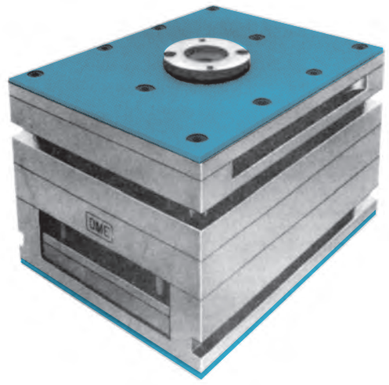

Locating Rings (6541, 6544) for use with Insulator Sheets

These thicker Locating Rings are used with Insulator Sheets ¼ and ½ thick. They extend beyond the Insulator Sheet far enough to ensure more than 5/16 pilot engagement with the locating hole in the machine platen.

ITEM NUMBER	Ø D +.003 -.000	DESCRIPTION
6541	3.990	STANDARD SERIES
6544	3.990	CLAMP TYPE

Note: Includes two 5/16-18 socket head cap screws.

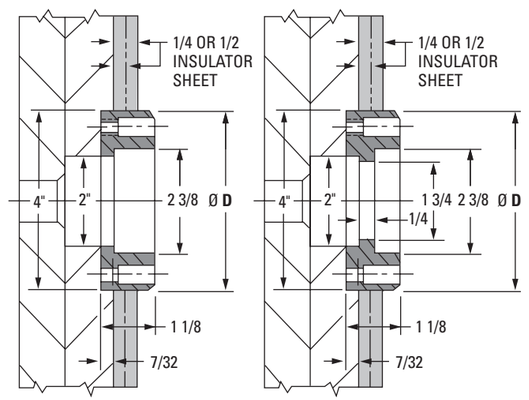

ITEM NO. 6541
Ø D = 3.990
(STANDARD SERIES)

ITEM NO. 6544
Ø D = 3.990
(CLAMP TYPE)

MOLD COOLING

Pre-Machined Insulator Sheets

Pre-Machined Insulator Sheets for Plastics Molds

Standard Features

Insulator Sheets are designed to fit most standard mold base sizes (see table lower right).

- Pre-machining includes:
  - Assembly screw hole clearance
  - Locating ring clearance hole
  - Insulator sheet mounting holes
- 2 thicknesses of Insulator Sheets (¼" or ½")
- Specifically designed to be 1/16" shorter on all sides to prevent sheet damage during mold handling
- Custom Insulator Sheets available
- Asbestos-free material
- High compression strength
- Use with locating rings 6541 and 6544
- Can be used on both top and bottom of mold bases

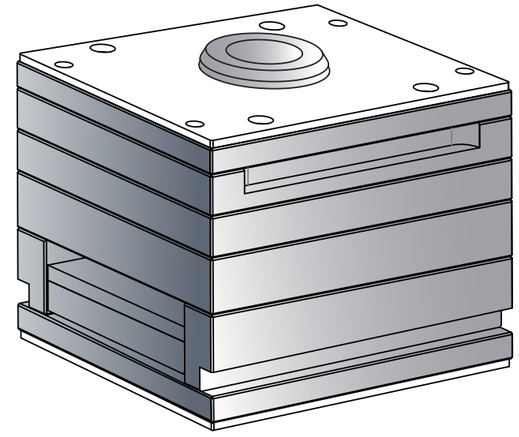

General Data

COMPRESSIVE STRENGTH	(ASTM D-229)	49,400 PSI AT 75°F 27,200 PSI AT 300°F 18,000 PSI AT 400°F 17,100 PSI AT 500°F 15,000 PSI AT 550°F
MODULUS OF ELASTICITY IN COMPRESSION	(ASTM D-229	1.8 X 10^6 PSI AT 75°F 2.9 X 10^6 PSI AT 425°F
WATER ABSORPTION	(ASTM D-229)	0.2%
THERMAL CONDUCTIVITY (K FACTOR), (BTU/HR/FT²/IN/°F)	(ASTM C-177)	1.9 AT 75°F 2.1 AT 425°F
FLAME RESISTANCE	(UL SUBJECT 94)	94V-0
EXPANSION ACROSS THICKNESS EXPANSION ACROSS SURFACE		6.43 X 10^{-5} IN/IN/°F 1.24 X 10^{-5} IN/IN/°F
MAXIMUM RECOMMENDED SERVICE TEMPERATURE		550°F

MOLD BASE	ITEM NUMBER	THICKNESS	ITEM NUMBER	THICKNESS
8x8	HTISM882	.250	HTISM884	.500
8x12	HTISM8122		HTISM8124	
10x8	HTISM1082		HTISM1084	
10x12	HTISM10122		HTISM10124	
10x16	HTISM10162		HTISM10164	
10x20	HTISM10202		HTISM10204	
11x12	HTISM11122		HTISM11124	
11x14	HTISM11142		HTISM11144	
11x18	HTISM11182		HTISM11184	
12x12	HTISM12122		HTISM12124	
12x15	HTISM12152		HTISM12154	
12x20	HTISM12202		HTISM12204	
13x15	HTISM13152		HTISM13154	
13x18	HTISM13182		HTISM13184	
13x21	HTISM13212		HTISM13214	
13x26	HTISM13262		HTISM13264	
15x18	HTISM15182		HTISM15184	
16x16	HTISM16162		HTISM16164	
16x20	HTISM16202		HTISM16204	
16x23	HTISM16232		HTISM16234	
16x29	HTISM16292		HTISM16294	
18x18	HTISM18182		HTISM18184	
18x20	HTISM18202		HTISM18204	
19x24	HTISM19242		HTISM19244	
24x24	HTISM24242		HTISM24244	
24x29	HTISM24292		HTISM24294	

NOTE: Special sizes and machining available upon request.
Send .dwg files to dme@dme.net for a quote.

TruCool™ MOLD COOLING

MOLD COOLING SOLUTIONS

DME TruCool™ Conformal Cooling is a Revolutionary Technology

TruCool™ addresses the thermal management of the injection molding process. Through the use of metal 3D printing, we manufacture inserts, slides, lifters and more, that can now contain cooling channels previously unimaginable. This technology has been proven over several years of research and development all the while pushing the limits of plastic injection molding. In existing molds, **TruCool™** inserts are typically able to reduce overall cycle time by an average of 25%, reduce warpage by nearly 35%, improves part quality through reduced thermal stress which results in material savings with less scrap and less press time while obtaining the same E.A.U. (Estimated Annual Usage) in comparison to conventional means. Typical R.O.I. (return on investment) is less than 3 months.

Should **TruCool™** inserts be considered at the lead of a project, additional benefits would include a complete thermal control of the mold, additional part design and engineering flexibility, a reduced cavity count which directly relates to a smaller tool and a smaller press ultimately reducing overall cost while again, still producing the same E.A.U. as well as a superior end user product.

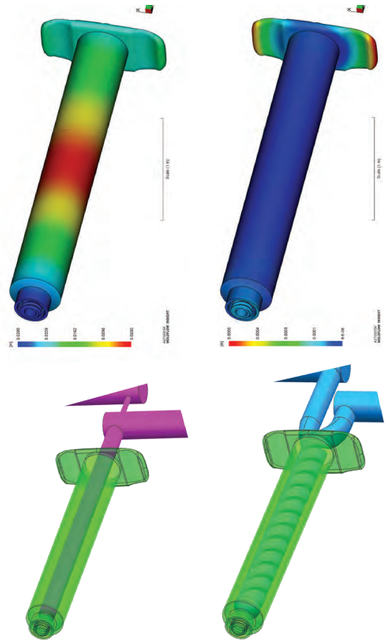

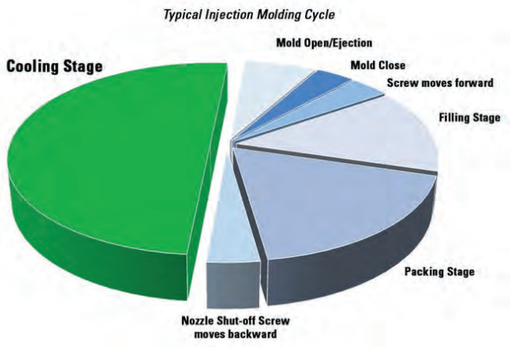

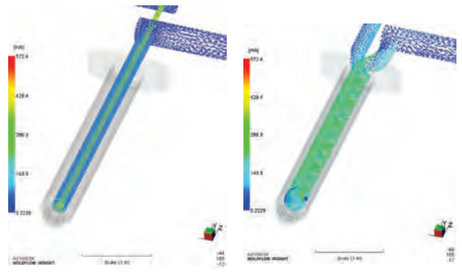



DME

TruCool™ MOLD COOLING

MOLD COOLING SOLUTIONS

DME TruCool™ Solutions

The DME **TruCool™** team utilizes Moldflow™ insight software for our analysis processes. A baseline analysis will be run to determine where the need for **TruCool™** inserts would be, design conformal channels and inserts into the model, followed by a comparative analysis to confirm expected results.

Analysis results will be provided for review in an easy to understand presentation or as a 3-D viewer file when requested. DME works with OEM, production facility, tool makers and a variety of other companies looking to improve product quality, and efficiency all while reducing cost. TruCool inserts qualify for a two (2) year/one (1) million shot warranty[1] and are guaranteed meet our analysis[2].

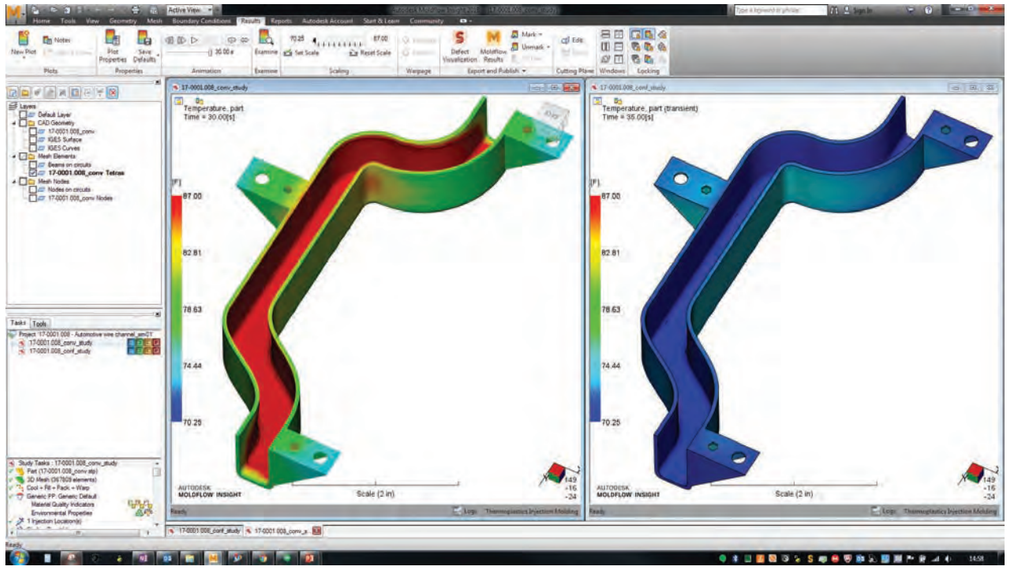

On the design side, DME uses Siemens NX CAD software. With DME's extensive tooling background, we not only offer design work for our **TruCool™** conformal cooling line of products, but we are additionally able to provide full mold design consultation. The Design Team is always available to support our clients starting at the initial stages of development, to supplying the mold base (through our manufacturing department), and everything in between. This sets customers at ease knowing they have over seven decades of engineering behind them. Companies of any size and global location can all benefit from the mold technology knowledge DME has developed. On the heating side of the process with hot runner manifolds and even conformal heating channels for dynamic thermal cycling, all the way to the cooling of the mold, we can help reduce delta on your part an increase the efficiency of your mold from beginning to end.

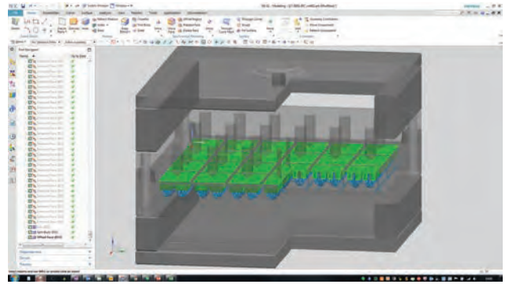

1. Annual maintenance required.
2. When all necessary information is provided by customer, failure would apply to a discount on future projects, requires DME review of mold in operation prior to and after conformal modification.

TruCool™ MOLD COOLING

MOLD COOLING SOLUTIONS

DME TruCool™ Printed Inserts

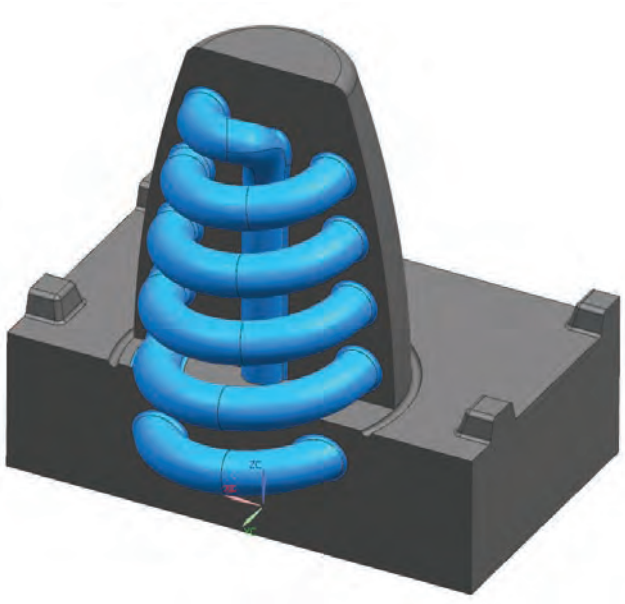

Wide range of materials available for TruCool™ conformal inserts:

- MS-1
- Aluminum
- CX Stainless
- P-20
- H-13
- 420SS

Capability of A-1 polish finish (using P-20, H-13 or 420SS)

Larger volumes:

- Sizes up to 35.4" (900mm) X 23.6" (600mm) X 19.6" (500mm

Development of standardized "off the shelf" componentry for plug-n-play ease and cost savings

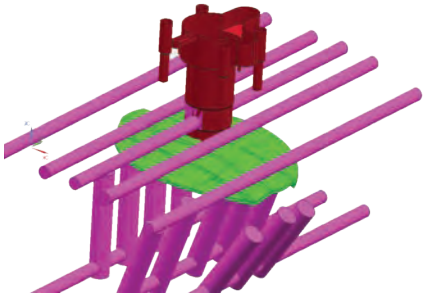

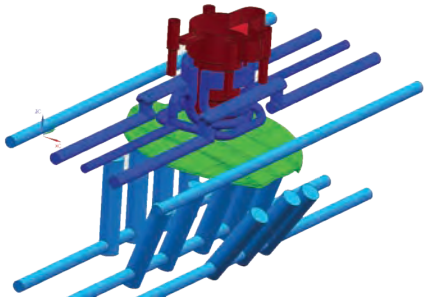

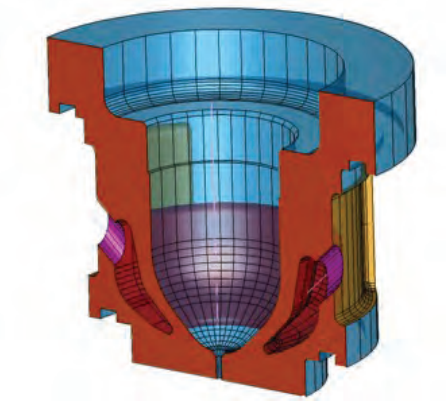

- Hot tip gate insert (2 major hot runner manufactures already on board)
- Cold sprue bushing
- Customizable pre-printed inserts
- Core pins

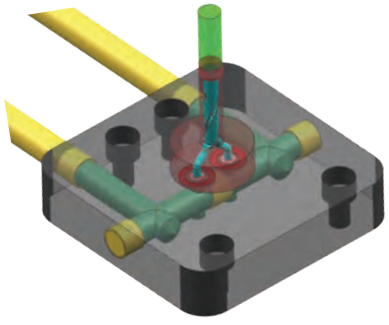

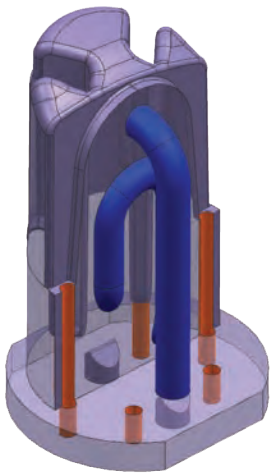

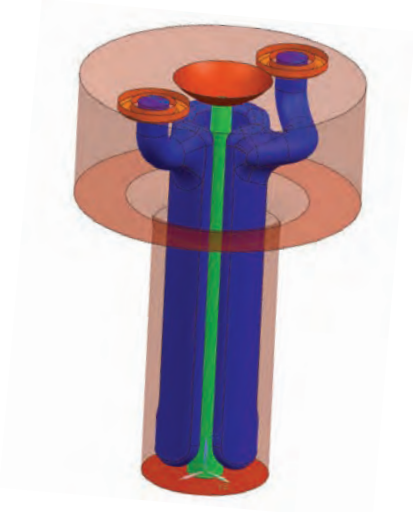



DME MOLD COMPONENTS – INCH

FEATURING HIGH-QUALITY
GUIDE PINS, BUSHINGS,
SUPPORT PILLARS, AND MORE

MOLD COMPONENTS – INCH

A comprehensive line of Standard Mold Components

Guide Pins – Hardened & Precision Ground.....258,261

Shoulder Guide Pins – Hardened & Precision Ground.....259

Bushings – Shoulder & Straight..... 260 - 261
Bushings – Self-Lubricating 262
Bushings – Bronze-Plated 263
Bushings – Solid Bronze 264

Guided Ejection Guide Pins.....265
Guided Ejection Bushings ..... 266 - 267
Guided Ejection Systems..... 268 - 269

Mold Parts for 34R Series Mold Base 270
Guide Pins and Bushings for Other Mold Assemblies.....271

Support Pillars & Stop Pins..... 272 - 273
Knock-Out Extension Pucks..... 274-275

Sprue Bushings .....276 to 277
Sprue Bushings – Copper-Based Alloy.....278 to 279

Locating Rings for Plastic Molds.....280 to 282

3-Plate Extension Bushings.....283 to 284

Special Guide Pins 285
Special Guide Pins – Faxable Quote Form 286
Metric Equivalents and Conversions 287



MOLD COMPONENTS – INCH

Table of Contents

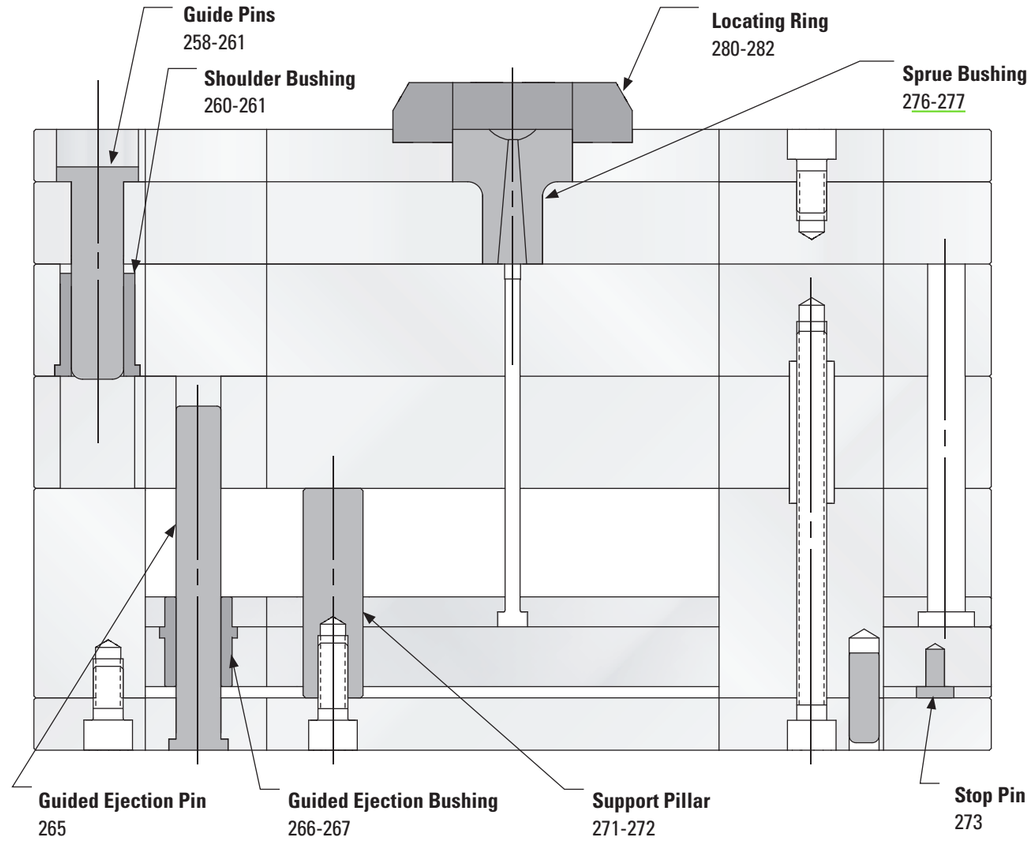

GUIDE PINS
GUIDE PINS.....258
SHOULDER GUIDE PINS.....259
GUIDE PINS – GL.....261

BUSHINGS
SHOULDER BUSHINGS AND STRAIGHT BUSHINGS 260-261
SELF-LUBRICATING BUSHINGS FOR GUIDE PINS 262
BRONZE-PLATED SHOULDER AND STRAIGHT BUSHINGS.....263
SOLID BRONZE SHOULDER AND STRAIGHT BUSHINGS 264

GUIDED EJECTION PINS & BUSHINGS
GUIDED EJECTION GUIDE PINS 265
GUIDED EJECTION BUSHINGS..... 266-267
GUIDED EJECTION SYSTEMS..... 268-269

MOLD ASSEMBLY PARTS
MOLD PARTS FOR 34R MOLD ASSEMBLIES 270
SHOULDER GUIDE PINS AND BUSHINGS FOR 45R, 56N, 58N, 56U, 58U AND 68SH MOLD ASSEMBLIES.....271

SUPPORT PILLARS & STOP PINS 272-273
KNOCK EXTENSION PUCKS 274-275

SPRUE BUSHINGS
SPRUE BUSHINGS 276-277
COPPER-BASED ALLOY SPRUE BUSHINGS..... 278-279

LOCATING RINGS
LOCATING RINGS FOR PLASTIC MOLDS 280-282

EXTENSION BUSHINGS
3-PLATE EXTENSION BUSHINGS 283-284

SPECIAL GUIDE PINS
GUIDE PINS FOR SPECIAL MOLD TOOLING NEEDS 285
FAXABLE QUOTE FORM – SPECIAL GUIDE PINS 286
CONVERSION CHART – INCH TO MM 287

MOLD COMPONENTS – INCH

Guide Pins – Hardened and Precision Ground

Guide Pins – GL

Hardened and Precision Ground



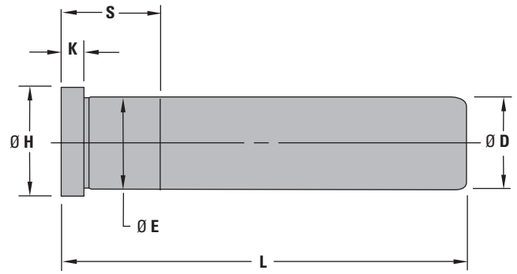

General Dimensions

NOMINAL DIA	Ø D +.0000 -.0005	Ø H +.000 -.030	K	Ø E +.0005 -.0000
¾	.749	.990	3⁄16	.751
⅞	.874	1.115	¼	.876
1"	.999	1.240	¼	1.001
1¼	1.249	1.490	5⁄16	1.251
1½	1.499	1.740	5⁄16	1.501

L LENGTH +.00 -.06	Ø D = ¾ DIA .749 +.0000 -.0005		Ø D = ⅞ DIA .874 +.0000 -.0005		Ø D = 1" DIA .999 +.0000 -.0005		Ø D = 1¼ DIA 1.249 +.0000 -.0005		Ø D = 1½ DIA 1.499 +.0000 -.0005		L LENGTH +.00 -.06
	S	ITEM NUMBER	S	ITEM NUMBER	S	ITEM NUMBER	S	ITEM NUMBER	S	ITEM NUMBER	
1¾	⅞	5000GL	⅞	5099GL	⅞	5198GL	—	—	—	—	1¾
2¼	⅞	5001GL	⅞	5100GL	⅞	5199GL	—	—	—	—	2¼
2¾	⅞	5002GL	⅞	5101GL	⅞	5200GL	⅞	5300GL	—	—	2¾
3¼	⅞	5003GL	⅞	5102GL	⅞	5201GL	⅞	5301GL	—	—	3¼
3¾	⅞	5004GL	⅞	5103GL	⅞	5202GL	⅞	5302GL	1⅜	5402GL	3¾
4¼	1⅜	5005GL	1⅜	5104GL	1⅜	5203GL	⅞	5303GL	1⅜	5403GL	4¼
4¾	1⅜	5006GL	1⅜	5105GL	1⅜	5204GL	1⅜	5304GL	1⅜	5404GL	4¾
5¼	1⅜	5007GL	1⅜	5106GL	1⅜	5205GL	1⅜	5305GL	1⅜	5405GL	5¼
5¾	1⅞	5008GL	1⅜	5107GL	1⅜	5206GL	1⅜	5306GL	1⅜	5406GL	5¾
6¼	1⅞	5009GL	1⅞	5108GL	1⅜	5207GL	1⅜	5307GL	1⅜	5407GL	6¼
6¾	1⅞	5010GL	1⅞	5109GL	1⅞	5208GL	1⅞	5308GL	1⅜	5408GL	6¾
7¼	1⅞	5011GL	1⅞	5110GL	1⅞	5209GL	1⅞	5309GL	—	—	7¼
7¾	1⅞	5012GL	1⅞	5111GL	1⅞	5210GL	1⅞	5310GL	1⅞	5410GL	7¾
8¼	—	—	1⅞	5112GL	1⅞	5211GL	1⅞	5311GL	—	—	8¼
8¾	—	—	1⅞	5113GL	1⅞	5212GL	1⅞	5312GL	1⅞	5412GL	8¾
9¼	1⅞	5015GL	—	—	1⅞	5213GL	1⅞	5313GL	—	—	9¼
9¾	—	—	—	—	1⅞	5214GL	1⅞	5314GL	1⅞	5414GL	9¾
10¼	—	—	—	—	1⅞	5215GL	1⅞	5315GL	—	—	10¼
10¾	—	—	1⅞	5117GL	1⅞	5216GL	1⅞	5316GL	1⅞	5416GL	10¾
11¼	—	—	—	—	1⅞	5217GL	1⅞	5317GL	—	—	11¼
11¾	—	—	—	—	1⅞	5218GL	1⅞	5318GL	1⅞	5418GL	11¾
12¼	—	—	1⅞	5120GL	1⅞	5219GL	1⅞	5319GL	—	—	12¼
12¾	—	—	—	—	—	—	1⅞	5320GL	1⅞	5420GL	12¾
13¾	—	—	—	—	—	—	1⅞	5322GL	1⅞	5422GL	13¾
14¾	—	—	—	—	—	—	1⅞	5324GL	1⅞	5424GL	14¾
15¾	—	—	—	—	—	—	1⅞	5326GL	1⅞	5426GL	15¾

NOTE: Grooved guide pins also available on special order.

All items in stock.

MOLD COMPONENTS – INCH

Shoulder Guide Pins – Hardened and Precision Ground

Shoulder Guide Pins – A-GL, C-GL, D-GL

Hardened and Precision Ground

DME Standard Shoulder Pins are precision made of high-quality steel and are hardened and finished ground to close tolerances. This combination enables moldmakers to line-bore the guide pin and bushing hole.



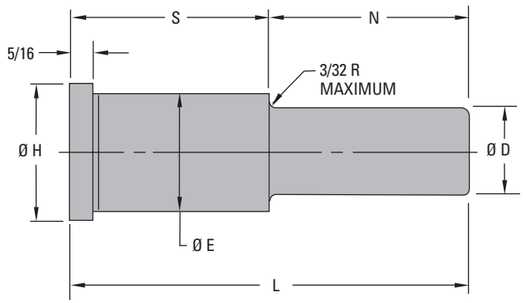

General Dimensions

NOMINAL DIA	Ø D +.0000 -.0005	Ø E +.0005 -.0000	Ø H +.000 -.010
¾	.749	1.126	1.228
1"	.999	1.376	1.510
1¼	1.249	1.626	1.791

S +.00 -.03	N +.00 -.03	L +.00 -.06	Ø D = ¾ DIA ITEM NUMBER	Ø D = 1" DIA ITEM NUMBER	Ø D = 1¼ DIA ITEM NUMBER
⅞	⅞	1¾	A0707GL	—	—
	1⅜	2¼	A0713GL	C0713GL	—
	1⅞	2¾	A0717GL	C0717GL	—
	2⅜	3¼	A0723GL	—	—
	2⅞	3¾	A0727GL	C0727GL	—
1⅜	⅞	2¼	A1307GL	C1307GL	—
	1⅜	2¾	A1313GL	C1313GL	D1313GL
	1⅞	3¼	A1317GL	C1317GL	—
	2⅜	3¾	A1323GL	C1323GL	D1323GL
	2⅞	4¼	A1327GL	C1327GL	—
	3⅜	4¾	A1333GL	C1333GL	D1333GL
1⅞	⅞	2¾	A1707GL	C1707GL	—
	1⅜	3¼	A1713GL	C1713GL	D1713GL
	1⅞	3¾	A1717GL	C1717GL	D1717GL
	2⅜	4¼	A1723GL	C1723GL	D1723GL
	2⅞	4¾	A1727GL	C1727GL	D1727GL
	3⅜	5¼	A1733GL	C1733GL	D1733GL
	3⅞	5¾	A1737GL	C1737GL	D1737GL
2⅜	⅞	3¼	A2307GL	—	—
	1⅜	3¾	A2313GL	C2313GL	D2313GL
	1⅞	4¼	A2317GL	C2317GL	D2317GL
	2⅜	4¾	A2323GL	C2323GL	D2323GL
	2⅞	5¼	A2327GL	C2327GL	D2327GL
	3⅜	5¾	—	C2333GL	D2333GL
	3⅞	6¼	A2337GL	C2337GL	D2337GL

S +.00 -.03	N +.00 -.03	L +.00 -.06	Ø D = ¾ DIA ITEM NUMBER	Ø D = 1" DIA ITEM NUMBER	Ø D = 1¼ DIA ITEM NUMBER
2⅛	1⅜	4¼	A2713GL	C2713GL	—
	1⅞	4¾	A2717GL	C2717GL	D2717GL
	2⅜	5¼	A2723GL	C2723GL	D2723GL
	2⅞	5¾	A2727GL	C2727GL	D2727GL
	3⅜	6¼	—	C2733GL	D2733GL
	3⅞	6¾	A2737GL	C2737GL	D2737GL
	4⅜	7¼	—	C2743GL	D2743GL
3⅛	1⅞	5¼	A3317GL	C3317GL	D3317GL
	2⅜	5¾	A3323GL	C3323GL	D3323GL
	2⅞	6¼	—	C3327GL	D3327GL
	3⅜	6¾	A3333GL	C3333GL	D3333GL
	4⅜	7¾	—	C3343GL	D3343GL
3⅛	2⅜	6¼	A3723GL	C3723GL	D3723GL
	2⅞	6¾	A3727GL	C3727GL	D3727GL
	3⅜	7¼	—	—	D3733GL
	3⅞	7¾	—	C3737GL	D3737GL
	4⅜	8¼	—	C3747GL	D3747GL
4⅜	2⅞	7¼	—	C4327GL	D4327GL
	3⅜	7¾	—	—	D4333GL
	3⅞	8¼	—	C4337GL	D4337GL
	4⅜	8¾	—	C4343GL	—
	4⅞	9¼	—	—	D4347GL
4⅞	3⅜	8¾	—	C4737GL	D4737GL
	4⅜	9¼	—	C4743GL	D4743GL
	4⅞	9¾	—	C4747GL	D4747GL
	5⅛	10¾	—	—	D4757GL
5⅛	3⅜	9¾	—	C5737GL	D5737GL
	4⅜	10¼	—	—	D5743GL
	4⅞	10¾	—	C5747GL	D5747GL
	5⅛	11¾	—	C5757GL	D5757GL

NOTE: Grooved guide pins also available on special order.

All items in stock.

MOLD COMPONENTS – INCH

Shoulder Bushings and Straight Bushings Hardened and Precision Ground

Shoulder Bushings

General Dimensions

NOMINAL I.D.	Ø D +.0005 -.0000	Ø E +.0005 -.0000	Ø H +.000 -.030
¾	.7505	1.1255	1.302
⅞	.8755	1.2505	1.427
1"	1.0005	1.3755	1.552
1¼	1.2505	1.6255	1.802
1½	1.5005	2.0005	2.177



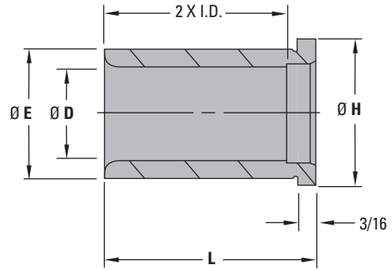

Surface Treatment: Case-hardened .030 to .040 deep

L LENGTH +.00 -.06	Ø D = ¾ DIA .7505 +.0005 -.0000	Ø D = ⅞ DIA .8755 +.0005 -.0000	Ø D = 1" DIA 1.0005 +.0005 -.0000	Ø D = 1¼ DIA 1.2505 +.0005 -.0000	Ø D = 1½ DIA 1.5005 +.0005 -.0000	L LENGTH +.00 -.06
	ITEM NUMBER	ITEM NUMBER	ITEM NUMBER	ITEM NUMBER	ITEM NUMBER	
⅞	5700	5710	5730	5750	5770	⅞
1⅜	5701	5711	5731	5751	5771	1⅜
1⅞	5702	5712	5732	5752	5772	1⅞
2⅜	5703	5713	5733	5753	5773	2⅜
2⅞	5704	5714	5734	5754	5774	2⅞
3⅜	5705	5715	5735	5755	5775	3⅜
3⅞	5706	5716	5736	5756	5776	3⅞
4⅜	5707	5717	5737	5757	5777	4⅜
4⅞	5708	5718	5738	5758	5778	4⅞
5⅜	5709	5720	5740	5760	5780	5⅜

Straight Bushings

Surface Treatment: Case-hardened .030 to .040 deep

NOMINAL I.D.	Ø D +.0005 -.0000	L +.00 -.06 LENGTH	Ø H +.0005 -.0000	ITEM NUMBER
¾	.7505	⅞	1.1255	5500
		1⅜	1.1255	5501
⅞	.8755	1⅜	1.2505	5502
1"	1.0005	1⅜	1.3755	5503
1¼	1.2505	1⅜	1.6255	5504
		1⅞	1.6255	5505
1½	1.5005	1⅜	2.0005	5506
		1⅞	2.0005	5507
2"	2.0005	3⅜	2.5005	5508
2½	2.5005	4⅞	3.2505	5509
3"	3.0005	4⅞	3.7505	5510



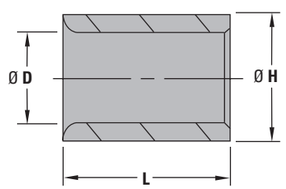

All items in stock.

MOLD COMPONENTS – INCH

Guide Pins and Shoulder Bushings 2", 2.5" and 3" Diameter

Guide Pins – GL

Designed to satisfy the requirements of larger plastics molds and die-cast dies. They are made of the finest quality alloy steels and are hardened and precision ground.



L LENGTH +.00 -.06	Ø D = 2" DIA 1.999 +.0000 -.0005		Ø D = 2½ DIA 2.499 +.0000 -.0005		Ø D = 3" DIA 2.999 +.0000 -.0005	
	S	ITEM NUMBER	S	ITEM NUMBER	S	ITEM NUMBER
5¾	1⅛	5606GL	2⅛	5806GL	—	—
6¾	1⅛	5608GL	2⅛	5808GL	—	—
7¾	1⅛	5610GL	2⅛	5810GL	—	—
8¾	1⅛	5612GL	2⅛	5812GL	2⅛	6012GL
9¾	1⅛	5614GL	2⅛	5814GL	—	—
10¾	1⅛	5616GL	2⅛	5816GL	2⅛	6016GL
11¾	1⅛	5618GL	2⅛	5818GL	—	—
12¾	1⅛	5620GL	2⅛	5820GL	2⅛	6020GL
13¾	1⅛	5622GL	2⅛	5822GL	—	—
14¾	1⅛	5624GL	2⅛	5824GL	2⅛	6024GL
15¾	1⅛	5626GL	2⅛	5826GL	—	—
16¾	2⅜	5628GL	2⅛	5828GL	2⅛	6028GL
18⅜	2⅜	5632GL	2⅛	5832GL	2⅛	6032GL

NOTE: Grooved guide pins also available on special order.

General Dimensions

NOMINAL DIA	Ø D +.0000 -.0005	Ø H +.000 -.030	Ø E +.0005 -.0000	K
2"	1.999	2.240	2.001	5⁄16
2½	2.499	2.740	2.501	5⁄16
3"	2.999	3.365	3.001	½

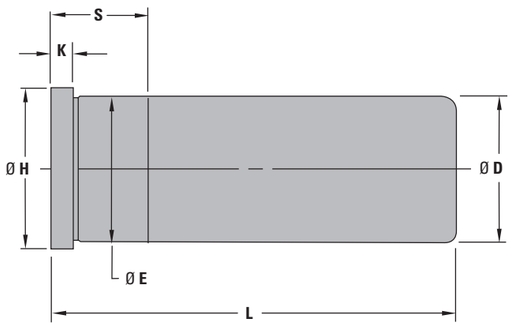



Shoulder Bushings

Made of the finest quality alloy steel. They are hardened and precision ground to reduce wear and give longer life under severe molding or die casting conditions. The I.D. is ground to close tolerances in order to maintain a smooth, but firm, running fit with DME's Standard Guide Pins.

General Dimensions

NOMINAL I.D.	Ø D +.0005 -.0000	Ø E +.0005 -.0000	Ø H +.000 -.030	K
2"	2.0005	2.5005	2.677	3/16
2½	2.5005	3.2505	3.427	3/16
3"	3.0005	3.7505	3.990	1/2

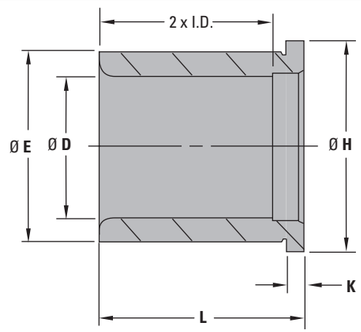

Surface Treatment: Case-hardened .030 to .040 deep

L LENGTH +.00 -.06	Ø D = 2" I.D. 2.0005 +.0005 -.0000	Ø D = 2½" I.D. 2.5005 +.0005 -.0000	Ø D = 3" I.D. 3.0005 +.0005 -.0000
	ITEM NUMBER	ITEM NUMBER	ITEM NUMBER
1⅜	5901	5951	—
1⅞	5902	5952	—
2⅜	5903	5953	—
2⅞	5904	5954	—
3⅜	5905	5955	—
3⅞	5906	5956	5976
4⅜	5907	5957	—
4⅞	5908	5958	5978
5⅞	5910	5960	5980
7⅞	—	—	5984

All items in stock.

MOLD COMPONENTS – INCH

Self-Lubricating Bushings for Guide Pins

DME Self-Lubricating Bushings can save time and money in the design, construction and operation of injection molds. They are ideal for clean-room conditions or any applications where the parts being molded prohibit the use of external lubricants, such as medical, electronic and food-related products. Their built-in lubrication capability also makes them a good choice for fast-cycling, high-production molds.



Self-Lubricating Straight Bushings – GBS

NOMINAL I.D.	Ø D +.0005 -.0000	L -.000 -.031 LENGTH	Ø H +.0005 -.0000	ITEM NUMBER
¾	.7505	⅞	1.1255	GBS0607
		1⅜	1.1255	GBS0613
⅞	.8755	1⅜	1.2505	GBS0713
1"	1.0005	1⅜	1.3755	GBS0813
1¼	1.2505	1⅜	1.6255	GBS1013
		1⅞	1.6255	GBS1017
1½	1.5005	1⅜	2.0005	GBS1213
		1⅞	2.0005	GBS1217
2"	2.0005	3⅜	2.5005	GBS1637
2½	2.5005	4⅜	3.2505	GBS2047
3"	3.0005	4⅜	3.7505	GBS2447

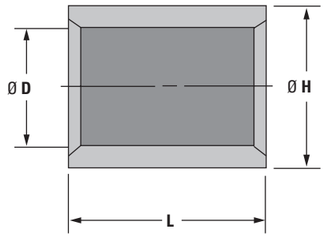

NOTE: These bushings are interchangeable with comparably sized DME steel or bronze-plated bushings.

All items in stock.

- Aluminum-bronze alloy with oil-impregnated graphite plugs
- Saves design and moldmaking costs for lubrication and fittings
- Reduces wear and galling
- Lowers maintenance and repair costs
- Eliminates contamination… ideal for "clean-room" environments

Self-Lubricating Shoulder Bushings – GBF

General Dimensions

NOMINAL I.D.	Ø E +.0005 -.0000	Ø H +.000 -.005	K +.000 -.005
¾	1.1255	1.302	.187
⅞	1.2505	1.427	
1"	1.3755	1.552	
1¼	1.6255	1.802	
1½	2.0005	2.177	
2"	2.5005	2.677	
2½	3.2505	3.427	
3"	3.7505	3.990	.500

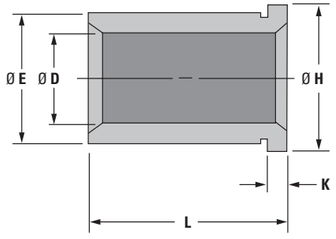

L LENGTH +.00 -.03	Ø D = ¾ I.D. .7505 +.0005 -.0000	Ø D = ⅞ I.D. .8755 +.0005 -.0000	Ø D = 1" I.D. 1.0005 +.0005 -.0000	Ø D = 1¼ I.D. 1.2505 +.0005 -.0000	Ø D = 1½ I.D. 1.5005 +.0005 -.0000	Ø D = 2" I.D. 2.0005 +.0005 -.0000	Ø D = 2½ I.D. 2.5005 +.0005 -.0000	Ø D = 3" I.D. 3.0005 +.0005 -.0000	L LENGTH +.00 -.03
	ITEM NUMBER	ITEM NUMBER	ITEM NUMBER	ITEM NUMBER	ITEM NUMBER	ITEM NUMBER	ITEM NUMBER	ITEM NUMBER	
⅞	GBF0607	GBF0707	GBF0807	GBF1007	GBF1207	—	—	—	⅞
1⅜	GBF0613	GBF0713	GBF0813	GBF1013	GBF1213	GBF1613	GBF2013	—	1⅜
1⅞	GBF0617	GBF0717	GBF0817	GBF1017	GBF1217	GBF1617	GBF2017	—	1⅞
2⅜	GBF0623	GBF0723	GBF0823	GBF1023	GBF1223	GBF1623	GBF2023	—	2⅜
2⅞	GBF0627	GBF0727	GBF0827	GBF1027	GBF1227	GBF1627	GBF2027	—	2⅞
3⅜	GBF0633	GBF0733	GBF0833	GBF1033	GBF1233	GBF1633	GBF2033	—	3⅜
3⅞	GBF0637	GBF0737	GBF0837	GBF1037	GBF1237	GBF1637	GBF2037	GBF2437	3⅞
4⅜	GBF0643	GBF0743	GBF0843	GBF1043	GBF1243	GBF1643	GBF2043	—	4⅜
4⅞	GBF0647	GBF0747	GBF0847	GBF1047	GBF1247	GBF1647	GBF2047	GBF2447	4⅞
5⅜	GBF0657	GBF0757	GBF0857	GBF1057	GBF1257	GBF1657	GBF2057	GBF2457	5⅜
7⅞	—	—	—	—	—	—	—	GBF2477	7⅞

MOLD COMPONENTS – INCH

Bronze-Plated Shoulder and Straight Bushings

Bronze-Plated Shoulder Bushings – LBB

Precision Ground

DME Standard Shoulder and Straight Bushings feature internal oil grooves and bronze-plating for smooth, non-galling operation.



General Dimensions

NOMINAL I.D.	Ø E +.0005 -.0000	Ø H +.000 -.005	K +.000 -.005
¾	1.1255	1.302	.187
⅞	1.2505	1.427	
1"	1.3755	1.552	
1¼	1.6255	1.802	
1½	2.0005	2.177	
2"	2.5005	2.677	
2½	3.2505	3.427	
3"	3.7505	3.990	.500

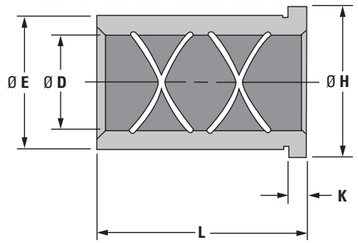

L +.000 -.060 LENGTH	Ø D = ¾ I.D. .7505 +.0005 -.0000	Ø D = ⅞ I.D. .8755 +.0005 -.0000	Ø D = 1" I.D. 1.0005 +.0005 -.0000	Ø D = 1¼ I.D. 1.2505 +.0005 -.0000	Ø D = 1½ I.D. 1.5005 +.0005 -.0000	Ø D = 2" I.D. 2.0005 +.0005 -.0000	Ø D = 2½ I.D. 2.5005 +.0005 -.0000	Ø D = 3" I.D. 3.0005 +.0005 -.0000
	ITEM NUMBER	ITEM NUMBER	ITEM NUMBER	ITEM NUMBER	ITEM NUMBER	ITEM NUMBER	ITEM NUMBER	ITEM NUMBER
⅞	LBB0607	LBB0707	LBB0807	LBB1007	LBB1207	—	—	—
1⅜	LBB0613	LBB0713	LBB0813	LBB1013	LBB1213	LBB1613	LBB2013	—
1⅞	LBB0617	LBB0717	LBB0817	LBB1017	LBB1217	LBB1617	LBB2017	—
2⅜	LBB0623	LBB0723	LBB0823	LBB1023	LBB1223	LBB1623	LBB2023	—
2⅞	LBB0627	LBB0727	LBB0827	LBB1027	LBB1227	LBB1627	LBB2027	—
3⅜	LBB0633	LBB0733	LBB0833	LBB1033	LBB1233	LBB1633	LBB2033	—
3⅞	LBB0637	LBB0737	LBB0837	LBB1037	LBB1237	LBB1637	LBB2037	LBB2437
4⅜	LBB0643	LBB0743	LBB0843	LBB1043	LBB1243	LBB1643	LBB2043	—
4⅞	LBB0647	LBB0747	LBB0847	LBB1047	LBB1247	LBB1647	LBB2047	LBB2447
5⅜	LBB0657	LBB0757	LBB0857	LBB1057	LBB1257	LBB1657	LBB2057	LBB2457
7⅞	—	—	—	—	—	—	—	LBB2477

Bronze-Plated Straight Bushings – STB

Precision Ground

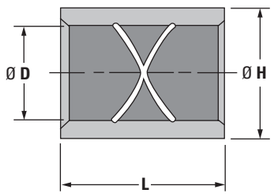



All items in stock.

NOMINAL I.D.	Ø D +.0005 -.0000	L +.000 -.060 LENGTH	Ø H +.0005 -.0000	ITEM NUMBER
¾	.7505	⅞	1.1255	STB0607
		1⅜	1.1255	STB0613
⅞	.8755	1⅜	1.2505	STB0713
1"	1.0005	1⅜	1.3755	STB0813
1¼	1.2505	1⅜	1.6255	STB1013
		1⅞	1.6255	STB1017
1½	1.5005	1⅜	2.0005	STB1213
		1⅞	2.0005	STB1217
2"	2.0005	3⅜	2.5005	STB1637
2½	2.5005	4⅜	3.2505	STB2047
3"	3.0005	4⅜	3.7505	STB2447

MOLD COMPONENTS – INCH

Solid Bronze Shoulder and Straight Bushings

Solid Bronze Shoulder Bushings – SBF

Precision Ground

DME Standard Shoulder and Straight Bushings feature internal oil grooves and high-strength bronze for smooth, non-galling operation.



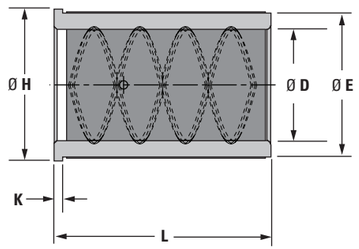

General Dimensions

NOMINAL I.D.	Ø E +.0005 -.0000	Ø H +.000 -.030	K +.000 -.005
¾	1.1255	1.302	.187
⅞	1.2505	1.427	
1"	1.3755	1.552	
1¼	1.6255	1.802	
1½	2.0005	2.177	
2"	2.5005	2.677	
2½	3.2505	3.427	
3"	3.7505	3.990	.500

L LENGTH +.000 -.060	Ø D = 3/4 I.D. .7505 +.0005 -.0000	Ø D = 7/8 I.D. .8755 +.0005 -.0000	Ø D = 1" I.D. 1.0005 +.0005 -.0000	Ø D = 1 1/4 I.D. 1.2505 +.0005 -.0000	Ø D = 1 1/2 I.D. 1.5005 +.0005 -.0000	Ø D = 2" I.D. 2.0005 +.0005 -.0000	Ø D = 2 1/2 I.D. 2.5005 +.0005 -.0000	Ø D = 3" I.D. 3.0005 +.0005 -.0000
	ITEM NUMBER	ITEM NUMBER	ITEM NUMBER	ITEM NUMBER	ITEM NUMBER	ITEM NUMBER	ITEM NUMBER	ITEM NUMBER
⅞	SBF0607	SBF0707	SBF0807	SBF1007	SBF1207	—	—	—
1⅜	SBF0613	SBF0713	SBF0813	SBF1013	SBF1213	SBF1613	SBF2013	—
1⅞	SBF0617	SBF0717	SBF0817	SBF1017	SBF1217	SBF1617	SBF2017	—
2⅜	SBF0623	SBF0723	SBF0823	SBF1023	SBF1223	SBF1623	SBF2023	—
2⅞	SBF0627	SBF0727	SBF0827	SBF1027	SBF1227	SBF1627	SBF2027	—
3⅜	SBF0633	SBF0733	SBF0833	SBF1033	SBF1233	SBF1633	SBF2033	—
3⅞	SBF0637	SBF0737	SBF0837	SBF1037	SBF1237	SBF1637	SBF2037	SBF2437
4⅜	SBF0643	SBF0743	SBF0843	SBF1043	SBF1243	SBF1643	SBF2043	—
4⅞	SBF0647	SBF0747	SBF0847	SBF1047	SBF1247	SBF1647	SBF2047	SBF2447
5⅞	SBF0657	SBF0757	SBF0857	SBF1057	SBF1257	SBF1657	SBF2057	SBF2457
7⅞	—	—	—	—	—	—	—	SBF2477

Solid Bronze Straight Bushings – SBS

Precision Ground

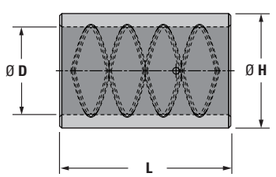



NOMINAL I.D.	Ø D +.0005 -.0000	L +.000 -.060 LENGTH	Ø H +.0005 -.0000	ITEM NUMBER
¾	.7505	⅞	1.1255	SBS0607
		1⅜	1.1255	SBS0613
⅞	.8755	1⅜	1.2505	SBS0713
1"	1.0005	1⅜	1.3755	SBS0813
1¼	1.2505	1⅜	1.6255	SBS1013
		1⅞	1.6255	SBS1017
1½	1.5005	1⅜	2.0005	SBS1213
		1⅞	2.0005	SBS1217
2"	2.0005	3⅛	2.5005	SBS1637
2½	2.5005	4⅛	3.2505	SBS2047
3"	3.0005	4⅛	3.7505	SBS2447

MOLD COMPONENTS – INCH

Guided Ejection Guide Pins

Guided Ejection Guide Pins – GL



- Short press fit lengths for use in guided ejection applications
- Pins are hardened and precision ground

System 1

When pins are installed in the support plate, ejector housing can be removed from mold without removing ejector plates, permitting easy access to service the ejector system.

System 2

Pins installed in the ejector housing permit fast, low-cost installation. When ejector housing is removed from mold base, the complete ejector assembly is removed.

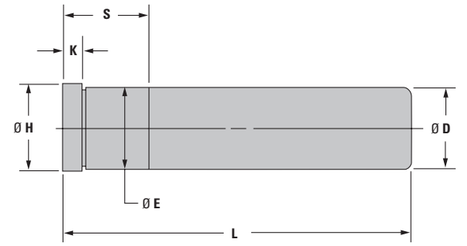

It is recommended that a minimum of four pins and bushings be installed. Size of the pins and bushings should be determined by the size of the mold. The Guided Ejection System is an inexpensive method to protect against wear and costly damage to a mold in production.

Properly installed, the DME Guided Ejection System holds the ejector assembly in alignment and supports the weight of the ejector assembly throughout the entire machine cycle. This greatly reduces wear on ejection components and prevents possible cocking of the ejector plates.

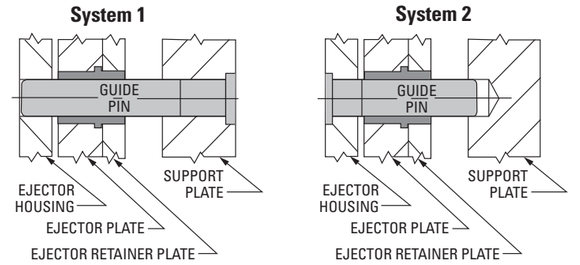

General Dimensions

NOMINAL DIA	Ø D +.0000 -.0005	Ø H (MAX)	K	Ø E +.0005 -.0000
¾	.749	.990	3⁄16	.751
⅞	.874	1.115	¼	.876
1"	.999	1.240	¼	1.001
1¼	1.249	1.490	5⁄16	1.251
1½	1.499	1.740	5⁄16	1.501

NOTES: 1. Select corresponding bronze-plated guided ejection bushings or self-lubricating guided ejection bushings in proper diameter for the application.

2. DME Guided Ejection Systems are available installed in standard mold bases. For additional information and prices, contact DME.

L LENGTH +.00 -.06	Ø D = ¾ I.D. .749 +.0000 -.0005		Ø D = ⅞ I.D. .874 +.0000 -.0005		Ø D = 1" I.D. .999 +.0000 -.0005		Ø D = 1¼ I.D. 1.249 +.0000 -.0005		Ø D = 1½ I.D. 1.499 +.0000 -.0005	
	S	ITEM NUMBER	S	ITEM NUMBER	S	ITEM NUMBER	S	ITEM NUMBER	S	ITEM NUMBER
3¾	⅛	5004GL	⅞	5103GL	⅛	5202GL	⅞	5302GL	1⅜	5402GL
4¼	⅛	PF5005GL	⅞	PF5104GL	⅛	PF5203GL	⅞	5303GL	1⅜	5403GL
4¾	⅛	PF5006GL	⅞	PF5105GL	⅛	PF5204GL	1⅜	5304GL	1⅜	5404GL
5¼	⅛	PF5007GL	⅞	PF5106GL	⅛	PF5205GL	1⅜	5305GL	1⅜	5405GL
5¾	⅛	PF5008GL	⅞	PF5107GL	⅛	PF5206GL	1⅜	5306GL	1⅜	5406GL
6¼	⅛	PF5009GL	⅞	PF5108GL	⅛	PF5207GL	1⅜	5307GL	1⅜	5407GL
6¾	⅛	PF5010GL	⅞	PF5109GL	⅛	PF5208GL				
7¼	⅛	PF5011GL	⅞	PF5110GL	⅛	PF5209GL				
7¾	⅛	PF5012GL	⅞	PF5111GL	⅛	PF5210GL				
8¼	—	—	⅞	PF5112GL	⅛	PF5211GL				
8¾	—	—	⅞	PF5113GL	⅛	PF5212GL				
9¼		PF5015GL	—	—	⅛	PF5213GL				
9¾	—	—	—	—	⅛	*PF5214GL				
10¼	—	—	—	—	⅛	PF5215GL				
10¾	—	—	⅞	PF5117GL	⅛	*PF5216GL				
11¼	—	—	—	—	⅛	PF5217GL				
11¾	—	—	—	—	⅛	*PF5218GL				
12¼	—	—	⅞	*PF5120GL	⅛	*PF5219GL				

MOLD COMPONENTS – INCH

Guided Ejection Bushings

- Holds the ejector assembly in alignment
- Supports the weight of the ejector assembly throughout the entire cycle
- Reduces wear on ejection components
- Prevents cocking of the ejector plates

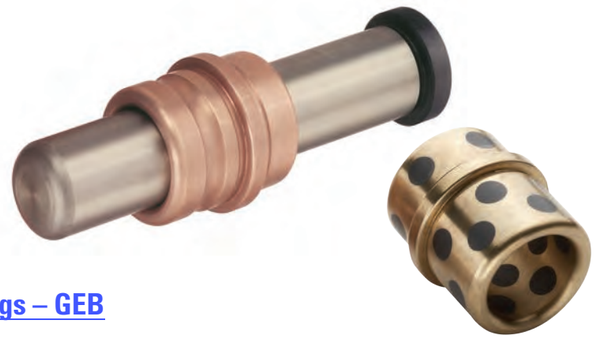

Bronze-Plated Guided Ejection Bushings – GEB

The Bronze-Plated Guided Ejection Bushings feature the strength of steel plus the nonscoring lubricity of bronze plating. Internal oil grooves and a lubrication hole help to ensure smoother mold operation.

It is recommended that a minimum of four bushings be installed. The size of the bushings should be determined by the size of the mold. The Guided Ejection System is inexpensive protection against wear and possible costly damage to a mold in production.

NOMINAL I.D.	ØD +.0005 -.0000	ØE +.0005 -.0000	ØA +.000 -.001	ØH +.000 -.010	L +.00 -.03	B	K	ITEM NUMBER
¾	.751	1.1255	1.1240	1.302	1.50	1.00	.56	GEB750
⅞	.876	1.2505	1.2490	1.427	1.50	1.00	.56	GEB875
1"	1.001	1.3755	1.3740	1.552	1.75	1.12	.62	GEB100
1¼	1.251	1.6255	1.6240	1.802	1.75	1.12	.62	GEB125
1½	1.501	2.0005	1.9990	2.177	1.75	1.12	.62	GEB150

NOTE: Select corresponding guide pin in proper diameter and length for application.

DME Guided Ejection Systems are available installed in standard mold bases. For additional information and prices, contact DME.

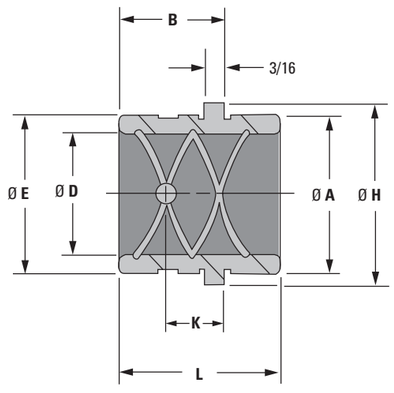

Self-Lubricating Guided Ejection Bushings – GBE

It is recommended that a minimum of four bushings be installed. Bushing size should be determined by the size of the mold. The Guided Ejection System is inexpensive protection against wear and possible costly damage to a mold in production.

NOMINAL I.D.	ØD +.0005 -.0000	ØE +.0005 -.0000	ØA +.000 -.001	ØH +.000 -.010	L +.00 -.03	B	ITEM NUMBER
3/4	.751	1.1255	1.1240	1.302	1.50	1.00	GBE0750
7/8	.876	1.2505	1.2490	1.427	1.50	1.00	GBE0875
1"	1.001	1.3755	1.3740	1.552	1.75	1.12	GBE1000
1 1/4	1.251	1.6255	1.6240	1.802	1.75	1.12	GBE1250
1 1/2	1.501	2.0005	1.9990	2.177	1.75	1.12	GBE1500
2"	2.001	2.5005	2.4990	2.687	2.25	1.62	GBE2000

All items in stock.

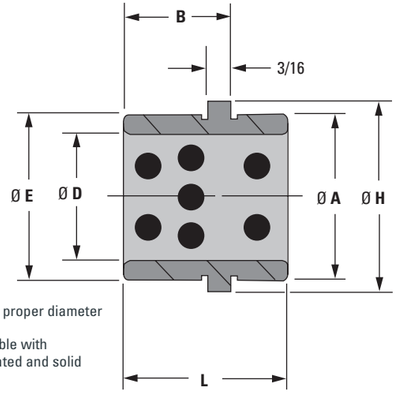

NOTES:
1. Select corresponding guide pin in proper diameter and length for application.
2. These bushings are interchangeable with comparably sized DME bronze-plated and solid bronze guided ejection bushings. 2" I.D. size (GBE-2000) is available only in self-lubricating style.

MOLD COMPONENTS – INCH

Guided Ejection Bushings

Solid Bronze Guided Ejection Bushings – BEB

Solid Bronze Guided Ejection Bushings feature high-strength bronze and natural lubricity. Internal oil grooves and a lubrication hole help to ensure smoother mold operation.

It is recommended that a minimum of four bushings be installed. The size of the bushings should be determined by the size of the mold. The Guided Ejection System is inexpensive protection against wear and possible costly damage to a mold in production.



- Holds the ejector assembly in alignment
- Supports the weight of the ejector assembly throughout the entire cycle
- Reduces wear on ejection components
- Prevents cocking of the ejector plates

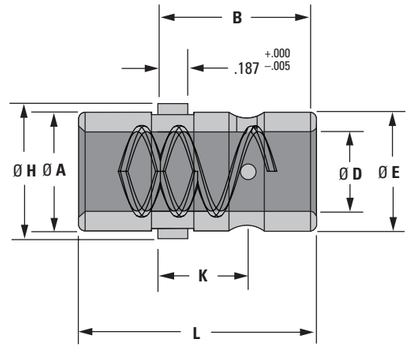

ITEM NUMBER	NOMINAL I.D.	ØD +.0005 -.0000	ØE +.0005 -.0000	ØA +.000 -.001	ØH +.000 -.010	L +.00 -.03	B +.000 -.015	K ±.01
BEB500	½	.501	.7505	.749	.853	1.50	1.00	.56
BEB750	¾	.751	1.1255	1.1240	1.302	1.50	1.00	.56
BEB875	⅞	.876	1.2505	1.2490	1.427	1.50	1.00	.56
BEB1000	1"	1.001	1.3755	1.3740	1.552	1.75	1.12	.62
BEB1250	1¼	1.251	1.6255	1.6240	1.802	1.75	1.12	.62
BEB1500	1½	1.501	2.0005	1.9990	2.177	1.75	1.12	.62
BEB2000	2	2.001	2.5005	2.499	2.687	2.25	1.62	.80

NOTE: Select corresponding guide pin in proper diameter and length for application.

DME Guided Ejection Systems are available installed in standard mold bases. For additional information and prices, contact DME.

MOLD COMPONENTS – INCH

Guided Ejection Systems

5-DAY SHIPPING

Guided Ejection Systems hold the ejector assembly in alignment and support the weight of the ejector assembly throughout the molding cycle – greatly reducing wear on ejection components and preventing cocking of the ejector assembly.

For quoting or ordering, specify:

Guided Ejection System Type

- ❑ System 1
- ❑ System 2

Quantity (2 or 4): _____

Guided Ejection Bushing Type

- ❑ Bronze-Plated Steel Bushings
- ❑ Self-Lubricating Bushings

Guided Ejection Position:

❑ STD ❑ Specify

Recommended position from table provided standard (see opposite page). If a different position is required, specify below.

GEx_____

GEy_____

Diameter:

❑ STD ❑ Specify

Recommended diameter from table provided standard. If a different diameter is required, it will require a positioning change; specify below.

Available diameters:

- ❑ 0.750
- ❑ 0.875
- ❑ 1.000
- ❑ 1.250

SYSTEM 1

When pins are installed in the support plate, the ejector housing can be removed from the mold without removing ejector plates. This permits easy access to service the ejector system.

SYSTEM 2

Pins installed in the ejector housing permit fast installation. When the ejector housing is removed from the mold base, the complete ejector assembly is removed.

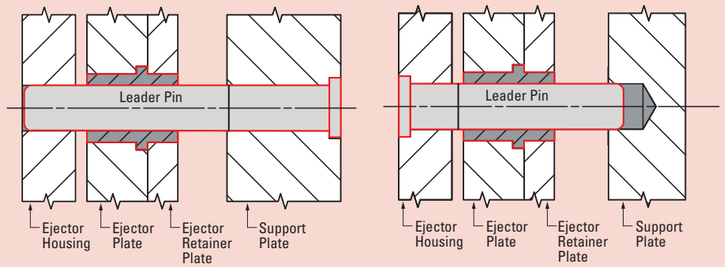



DME

MOLD COMPONENTS – INCH

Guided Ejection Systems

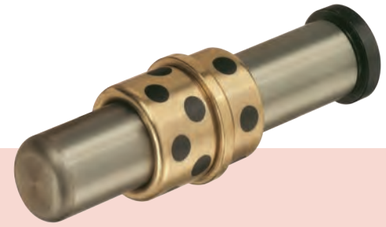

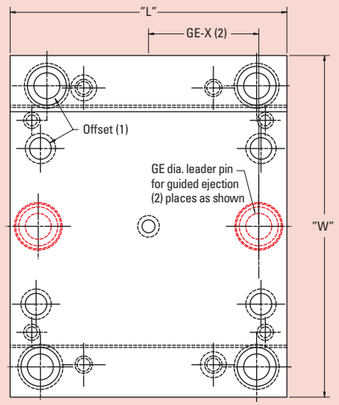

"B" HALF OF MOLD FOR 88, 812 & 108 MOLD BASE SIZE ONLY

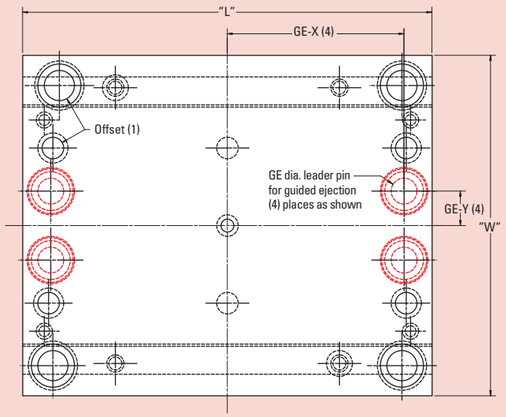

"B" HALF OF MOLD FOR 1012 – 2435 BASES

Guided Ejection Positions

PIN DIAMETER (RECOMMENDED)	BASE SIZE	GEx	GEy
0.750	88	3.000	Center
	812	5.000	Center
	108	3.062	Center
	1012	5.000	1.000
	1016	7.062	1.000
	1020	9.062	1.000
	1112	5.062	1.625
	1114	6.062	1.625
	1118	8.062	1.625
	1123	10.812	1.625
0.875	212	5.000	1.750
	1215	6.500	1.750
	1220	9.000	1.750
	1223	10.750	1.750
	1315	6.500	2.375
	1318	8.000	2.375
	1321	9.375	2.375
	1323	10.750	2.375
	1326	12.000	2.375
	1329	13.750	2.375

PIN DIAMETER (RECOMMENDED)	BASE SIZE	GEx	GEy
1.000	1518	7.875	2.375
	1524	10.812	2.375
	1529	13.688	2.375
	1616	6.938	2.875
	1620	8.938	2.875
	1623	10.688	2.875
	1626	11.938	2.875
	1629	13.688	2.875
	1635	16.688	2.875
	1724	10.812	3.125
	1729	13.688	3.125
	1818	7.938	3.875
	1820	8.938	3.875
	1823	10.688	3.875
	1826	11.038	3.875
	1829	13.688	3.875
	1835	16.688	3.875
	1924	10.812	4.625
	1929	13.688	4.625
	1935	16.688	4.625
1.250	2424	10.688	6.125
	2429	13.562	6.125
	2435	16.562	6.125

MOLD COMPONENTS – INCH

Mold Parts for 34R Mold Assemblies

Locating Rings

The large diameter of the locating ring is ground to close tolerances to mate with the platens of the Arburg C/4b Press.



ITEM NUMBER
6534

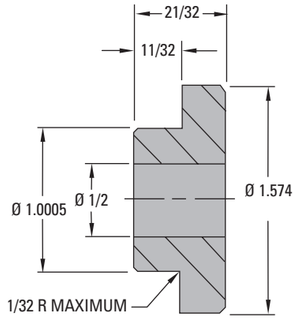

Guide Pins and Shoulder Bushings

Designed specifically to suit the 34R Series Mold Base. They are made of the finest quality steels and are hardened and precision ground.

Guide Pins



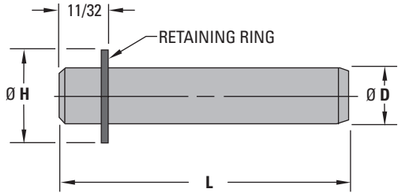

Ø D +.0003 -.0000	Ø H (MAX)	L +.00 -.03	ITEM NUMBER
.375	.610	1⅜	4900
	.610	1⅝	4901
	.610	2"	4902
	.610	2¼	4903
	.610	2½	4904
	.610	3"	4906
.500	.740	1⅜	4922

Shoulder Bushings



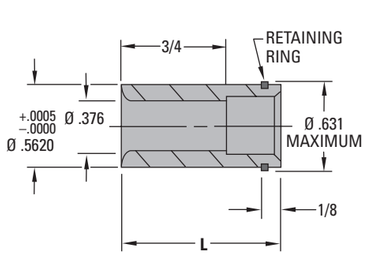

L +.00 -.03	ITEM NUMBER
⅞	4802
1⅛	4804
1⅜	4806

Adjustable Knock-Out Rods

ITEM NUMBER
K-10



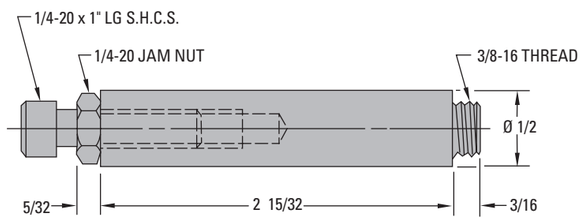

Tubular Dowels – for 34R Mold Bases

Hardened and precision ground to close tolerances.

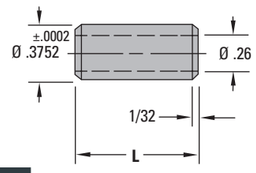

NOMINAL DIA	L
⅜	⅜
	⅞

WHEN ORDERING, PLEASE SPECIFY:
1. Quantity
2. Nominal Diameter
3. Length

MOLD COMPONENTS – INCH

Shoulder Guide Pins and Bushings for 45R, 56N, 58N, 56U, 58U and 68SH Mold Assemblies

Shoulder Guide Pins

Shoulder diameter is of the same size and tolerance to match with the O.D. of Standard DME Shoulder Bushings listed below.



A +.00 -.03	B +.00 -.03	L +.00 -.06	Ø D = ½ DIA ITEM NUMBER	Ø D = 17/32 DIA ITEM NUMBER
⅞	⅞	1¾	S0707GL	T0707GL
	1⅛	2¼	S0713GL	T0713GL
	1⅛	2¾	S0717GL	T0717GL
	2⅛	3¼	S0723GL	T0723GL
1⅛	⅞	2¼	S1307GL	T1307GL
	1⅛	2¾	S1313GL	T1313GL
	1⅛	3¼	S1317GL	T1317GL
1⅛	⅞	2¾	S1707GL	T1707GL
	1⅛	3¼	S1713GL	T1713GL
	1⅛	3¾	S1717GL	T1717GL
2⅛	⅞	3¼	S2307GL	T2307GL
	—	—	—	—
2⅛	1⅛	4¼	S2713GL	T2713GL
	—	—	—	—

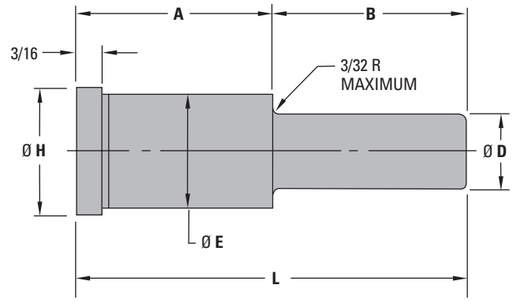

General Dimensions

NOMINAL DIA	Ø D +.0000 -.0005	Ø E +.0005 -.0000	Ø H (MAX)
½	.499	.751	.853
17/32	.530	.751	.853

Shoulder Bushings

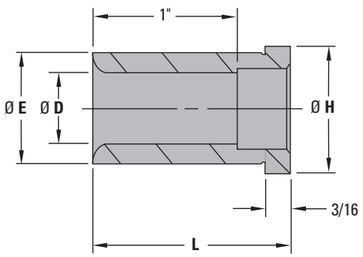

L +.00 -.06	Ø D = ½ DIA ITEM NUMBER	Ø D = 17/32 DIA ITEM NUMBER
⅞	S5690	T5690
1⅛	S5691	T5691
1⅛	S5692	T5692
2⅛	S5693	T5693

Straight Bushings

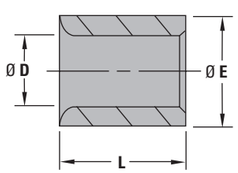

L +.00 -.06	Ø D = ½ DIA ITEM NUMBER	Ø D = 17/32 DIA ITEM NUMBER
⅞	S5498	T5498
1⅛	S5499	T5499

Made of the finest quality steel, hardened and precision ground to reduce wear and give longer life.

General Dimensions

NOMINAL I.D.	Ø D +.0005 -.0000	Ø E +.0005 -.0000	Ø H (MAX)
½	.500	.7505	.853
17/32	.531	.7505	.853

MOLD COMPONENTS – INCH

Support Pillars and Stop Pins

Support Pillars

S.A.E. 1040 Steel

Pillar height (C dimension) is finished flat and parallel.

Support pillars should be used liberally since they greatly increase the capacity of the mold to support the projected area of the cavities, runner and sprue. By providing additional support, they prevent deflection of the mold. The absolute necessity of using support pillars is demonstrated by using standard strength of materials formulas. For example, an 11⅞ x 15" mold base without support pillars and with a maximum permissible load on the support plate, will permit 14 square inches of cavity area without deflecting enough to cause flash. The use of one row of support pillars on center will quadruple this permissible cavity area to 56 square inches. Two rows will give nine times the area or 126 square inches. Please refer to the drawings below.

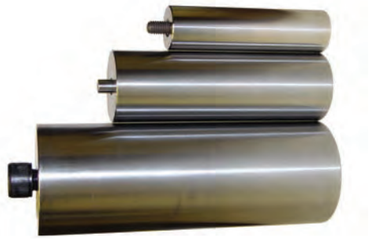

Material: S.A.E. 1040 Steel

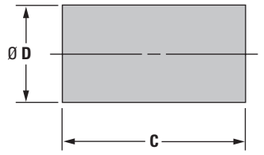

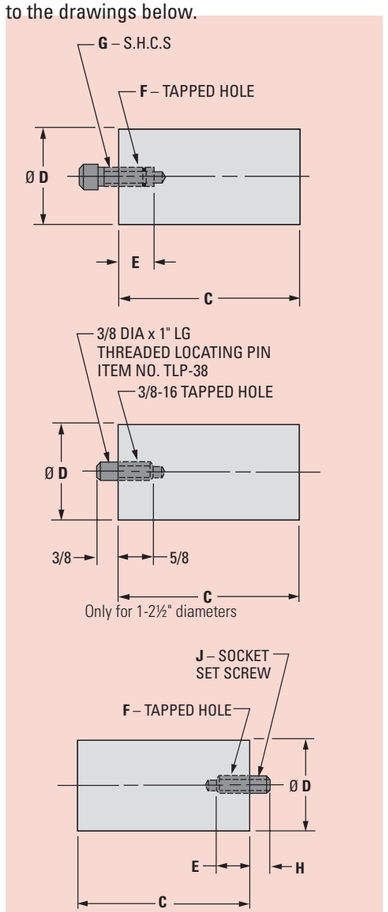

Cap Screw Application

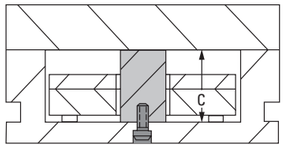

Threaded Locating Pin Application

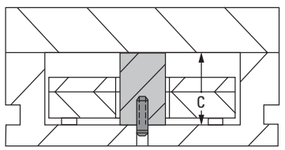

Socket Set Screw Application

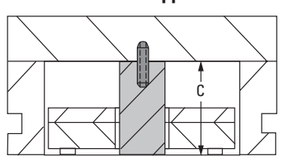

Material: S.A.E. 1040 Steel

No support pillars

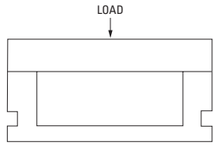

One row of support pillars increases the permissible cavity area 4 times

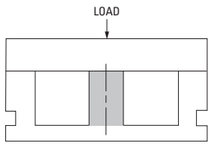

Two rows of support pillars increase the permissible cavity area 9 times

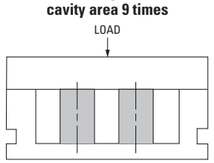

Ø D	E	F	H (APPROX)	J SOCKET SET SCREW
1", 1¼, 1½, 2", 2½	⅝	⅜ – 16	½	ITEM NO. SSS38114
3", 4"	1¼	⅝ – 11	⅜	ITEM NO. SSS582

NOTES: Order S.H.C.S. separately.
Please reference page 364 for Socket Head Cap Screw information.

DME

MOLD COMPONENTS – INCH

Support Pillars and Stop Pins

Support Pillars

Support pillars are universally adaptable for cap screw, threaded locating pin, or socket set screw applications.

Order pillars from chart at left and required "fasteners" as listed below.

Cap Screw (S.H.C.S.) Applications

3/8-16 or 5/8-11 socket head cap screws can be ordered in length required.

Please reference page 364 for Socket Head Cap Screw information.

Ø D +.000 -.060 DIAMETER	C +.001 -.000 HEIGHT	ITEM NUMBER
1"	2.500	6090
	3.000	6091
	3.500	6092
	4.000	6093
	4.500	6094
1¼	2.500	6130
	3.000	6131
	3.500	6132
	4.000	6133
	4.500	6134
	5.000	6135
	6.000	6136
1½	2.500	6140
	3.000	6141
	3.500	6142
	4.000	6143
	4.500	6144
	5.000	6145
	5.500	6203
	6.000	6146

Ø D +.000 -.060 DIAMETER	C +.001 -.000 HEIGHT	ITEM NUMBER
2"	2.500	6150
	3.000	6151
	3.500	6152
	4.000	6153
	4.500	6154
	5.000	6155
	6.000	6156
2½	3.000	6265
	3.500	6266
	4.000	6267
	4.500	6268
	5.000	6269
	5.500	6200
	6.000	6270

Threaded Locating Pin Applications

Locating pins unavailable for 3" and 4" diameter pillars.

Ø D PILLAR	ITEM NUMBER
1" to 2 ½"	TLP38

Ø D +.000 -.060 DIAMETER	C +.001 -.000 HEIGHT	ITEM NUMBER
3"	3.500	6204
	4.000	6233
	4.500	6234
	5.000	6235
	6.000	6236
	8.000	6238
4"	5.000	6245
	6.000	6246
	8.000	6248

Socket Set Screw Applications

Order pins and screws in package lots only

Ø D PILLAR	ITEM NUMBER	QTY PER PACKAGE
1" to 2 ½"	SSS38114	10
3" and 4"	SSS582	5

Stop Pins

Dowel-type Stop Pins for special assemblies.



ITEM NUMBER	QTY PER PACKAGE
7100	50

Order pins in package lots only.

Typical Installation

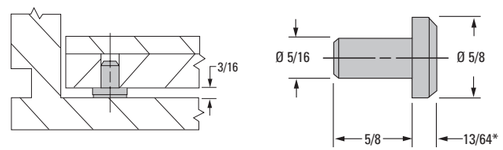

*Head thickness .020 oversize to permit fitting at assembly.

Stop Discs

Supplied with (1) #10-24UN x 1/2 long FHCS

QTY PER PACKAGE 10
ALL PART NUMBERS

PART NUMBER	TYPE	DIA (D)	INNER DIA (C)	THICK-NESS (T)	SCREW NUMBER
SD0750	A	0.750	0.201	0.1875	N1012FH
SD0750-250	A	0.750	0.201	0.250	NF1012FH
SD0750-375	B	0.750	0.201	0.375	N1034CS
SD0750-500	B	0.750	0.201	0.500	N1034CS
SD1000-188	A	1.000	0.261	0.1875	1412FH
SD1000-250	A	1.000	0.261	0.250	1412FH
SD1000-375	B	1.000	0.261	0.375	1434CS
SD1000-500	B	1.000	0.261	0.500	1434CS
SD1500-250	A	1.500	0.261	0.250	1412FH
SD1500-375	B	1.500	0,261	0.375	1434CS

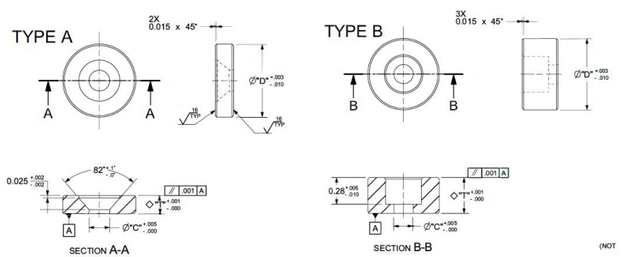

MOLD COMPONENTS – INCH

Reversible Knock-out Extension Pucks

KO Extensions standardize mold ejector systems by unifying press knock out rod lengths. Wide range of thread configurations available for many different press types. The reversible puck can be mounted on either side to accommodate two different sizes of knock out rods.

ITEM NUMBER	THREAD 1 THRU	THREAD 2 H DEEP	H DIM	L DIM
BCPE103812	3/8"-16 UNC	1/2"-13 UNC	0.53	1.052
BCPE101258	1/2"-13 UNC	5/8"-11 UNC		
BCPE105834	5/8"-11 UNC	3/4"-10 UNC		
BCPE103812	3/8"-10 UNC	1/2"-13 UNC	0.78	1.552
BCPE151258	1/2"-13 UNC	5/8"-11 UNC		
BCPE155834	5/8"-11 UNC	3/4"-10 UNC		

(4) 1/4"-20 SHCS included



Material:
Steel - 4140 or P20
Hardness - 28-32 HRc
Surface Treatment - Black Oxide

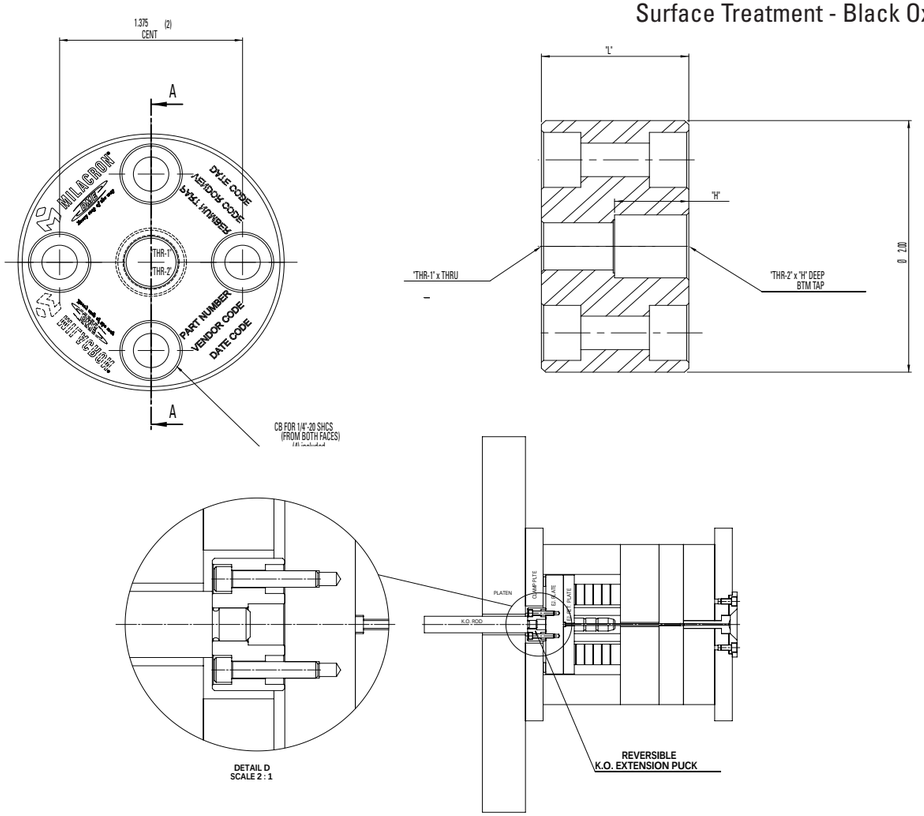

MOLD COMPONENTS – INCH

Knock-out Extension Pucks

KO Extension Pucks standardize mold ejector systems by unifying press knock out rod lengths. Wide range of thread configurations available for many different press types.

ITEM NUMBER	THREAD THRU	L DIM
BCPE1038	3/8"-16 UNC	1.052
BCPE1012	1/2"-13 UNC	
BCPE1058	5/8"-11 UNC	
BCPE1034	3/4"-10 UNC	
BCPE10NT *	NONE	
BCPE1538	3/8"-16 UNC	1.552
BCPE1512	1/2"-13 UNC	
BCPE1558	5/8"-11 UNC	
BCPE1534	3/4"-10 UNC	
BCPE15NT *	NONE	

(4) 1/4"-20 SHCS included

* NT - No Thread, Mold Maker to Machine



Material:
Steel - 4140 or P20
Hardness - 28-32 HRc
Surface Treatment - Black Oxide

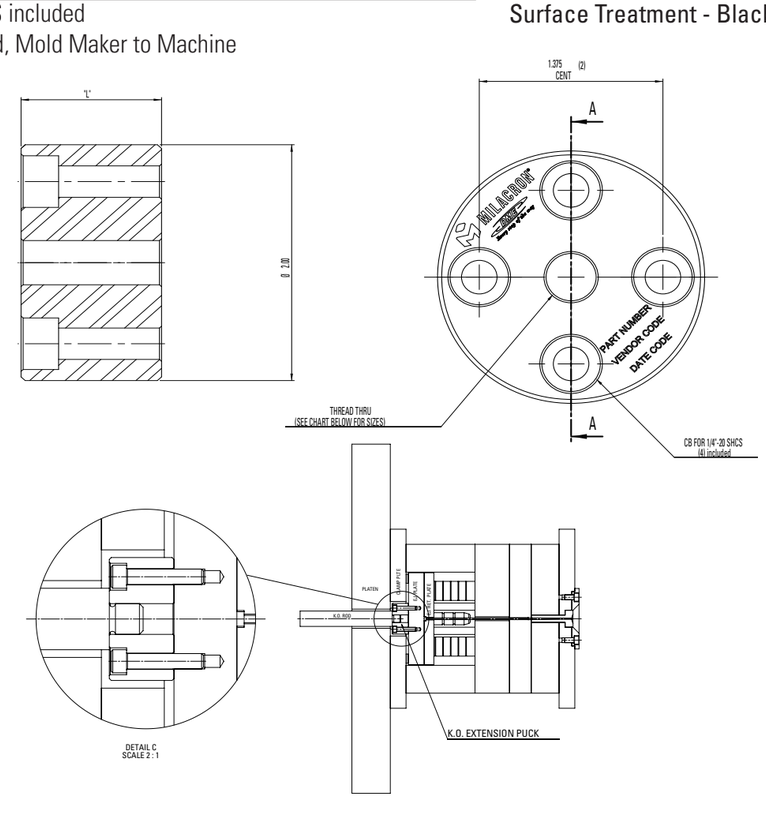

MOLD COMPONENTS – INCH

Sprue Bushings

Sprue Bushings – A, B, LN and AR

S.A.E. 6145 Steel Hardened, Ground and Polished

(HRC 43-45, except "LN" Series – carburized .050-.060 deep to HRC 60-62, drillable with carbide-tipped drill.)



"B" Series

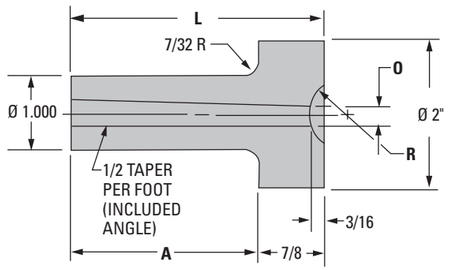

Available with **O** 5/32, 7/32, 9/32 or 11/32 **R** 1/2 or 3/4

ITEM NUMBER PREFIX	A	L
B00_ _	2 9/32	1 25/32
B01_ _	1 13/32	2 9/32
B02_ _	1 29/32	2 25/32
B03_ _	2 13/32	3 9/32
B04_ _	2 29/32	3 25/32
B05_ _	3 13/32	4 9/32
B06_ _	3 29/32	4 25/32
B07_ _	4 13/32	5 9/32
B08_ _	4 29/32	5 25/32
B10_ _*	5 29/32	6 25/32
B12_ _*	6 29/32	7 25/32

*B10: O 5/32 R 3/4
*B12: O 5/32 R 3/4
available on special order.

"A" Series

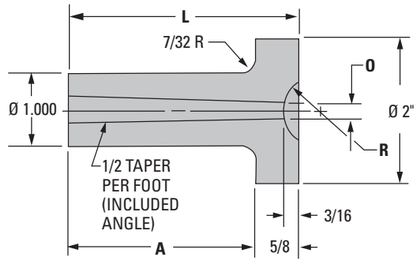

ITEM NUMBER PREFIX	A	L
A00_ _	1 3/16	1 13/16
A01_ _	1 11/16	2 5/16
A02_ _	2 3/16	2 13/16
A03_ _	2 11/16	3 5/16
A04_ _	3 3/16	3 13/16
A05_ _	3 11/16	4 5/16
A06_ _	4 3/16	4 13/16

Available with:
O 5/32, 7/32, 9/32 or 11/32
R 1/2 or 3/4

"LN" Series

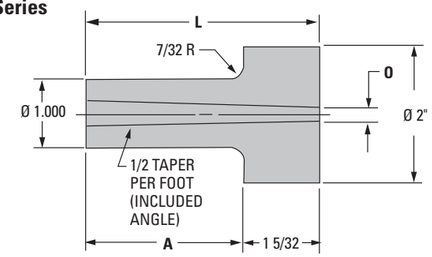

ITEM NUMBER PREFIX	A	L
LN00_	2 3/32	2 1/16
LN01_	1 13/32	2 5/16
LN02_	1 29/32	3 1/16
LN03_	2 13/32	3 5/16
LN04_	2 29/32	4 1/16
LN05_	3 13/32	4 5/16

Available with:
O 5/32, 7/32 or 9/32
R No spherical radius

O 11/32 available on special order.

"AR" Series

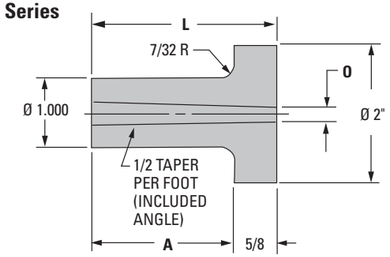

ITEM NUMBER PREFIX	A	L
AR00_	1 3/16	1 13/16
AR01_	1 11/16	2 5/16
AR02_	2 3/16	2 13/16

Available with:
O 5/32 or 7/32
R No spherical radius

O 9/32 available on special order.

HOW to order:
Specify Item Number Prefix with O numerator, and R numerator. Include zeros where shown, but omit all denominators, slashes and NA.

	Item Number Prefix	O	R		ITEM NUMBER
Example:	B02_ _	7/32	1/2	=	B0271
Example:	LN02_	5/32	NA	=	LN025
Example:	A05_ _	11/32	3/4	=	A05113

DME

MOLD COMPONENTS – INCH

Sprue Bushings

Sprue Bushings – U, UV, UR and L

S.A.E. 6145 Steel, HRC 43-45 Hardened, Ground and Polished

The wide range of Standard DME Sprue Bushings allows mold to be installed in a variety of injection molding machines. The accuracy and interchangeability permit easy replacement if the mold is being transferred to another machine. It's wise to standardize … on DME Sprue Bushings.

NOTE: "W" series sprue bushings (Watson-Stillman) available on special order. Other special sprue bushings will be quoted on request per your specifications.

"U" Series – Newbury and Standard

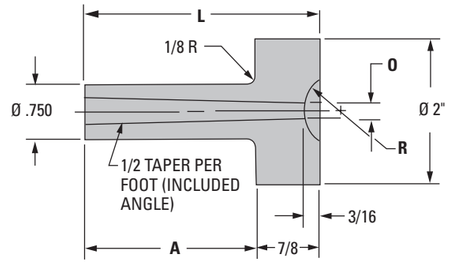

ITEM NUMBER PREFIX	A	L
U00 _ _	2 9/32	1 25/32
U01 _ _	1 13/32	2 9/32
U02 _ _	1 29/32	2 25/32
U03 _ _	2 13/32	3 9/32
U04 _ _	2 29/32	3 25/32

Available with
O 5/32, 7/32 or 9/32 **R** 1/2 or 3/4

"UV" Series – Van Dorn and Moslo

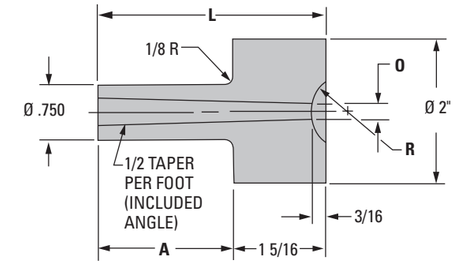

ITEM NUMBER PREFIX	A	L
UV00_ 1	2 3/32	2 1/32
UV01_ 1	1 13/32	2 29/32
UV02_ 1	1 29/32	3 1/32
UV03_ 1	2 13/32	3 29/32
UV04_ 1	2 29/32	4 1/32

Available with
O 5/32, 7/32 or 9/32 **R** 1/2
R 3/4 available on special order

"L" Series

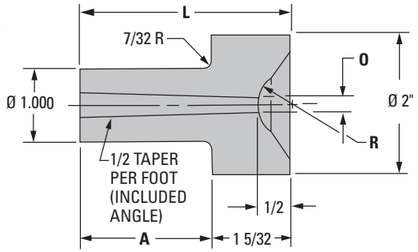

ITEM NUMBER PREFIX	A	L
L00_ 1	2 9/32	2 1/16
L01_ 1	1 13/32	2 5/16
L02_ 1	1 29/32	3 1/16
L04_ 1	2 29/32	4 1/16
L06_ 1	3 29/32	5 1/16
L12_ 1*	6 29/32	8 1/16

Available with
O 5/32, 7/32 or 9/32
R 1/2
O 11/32 available on special order
R 3/4 available on special order

*L12: **O** 5/32 available on special order.

"UR" Series – Arburg

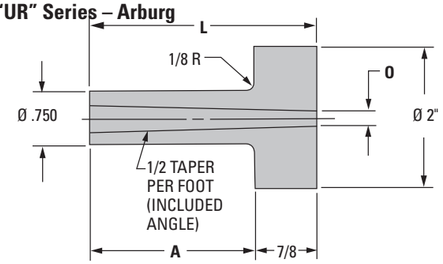

ITEM NUMBER PREFIX	A	L
UR00_	2 9/32	1 25/32
UR01_	1 13/32	2 9/32
UR02_	1 29/32	2 25/32
UR03_	2 13/32	3 9/32
UR04_	2 29/32	3 25/32

Available with
O 5/32, 7/32 or 9/32
R No spherical radius

HOW to order:
specify Item Number Prefix with O numerator, and R numerator. Include zeros where shown, but omit all denominators, slashes and NA.

	Item Number Prefix	O	R		ITEM NUMBER
Example:	U00_ _	7/32	1/2	=	U0071
Example:	UR04_	9/32	NA	=	UR049
Example:	L01_ 1	5/32	1/2	=	L0151

MOLD COMPONENTS – INCH

Copper-Based Alloy Sprue Bushings

High-conductivity, corrosion-resistant, copper-based alloy bushing body with hardened 420 stainless steel nozzle seat insert

- Reduces sprue cooling time and cycle time
- Helps prevent sprue sticking or break-off within bushing
- Stainless steel nozzle seat provides wear resistance and insulates to reduce transference of heat from machine nozzle to the sprue area
- PSB Series is directly interchangeable with existing DME "B" Series steel sprue bushings
- PSU Series is directly interchangeable with existing DME "U" Series steel sprue bushings
- Reduces the need for water lines in the sprue area
- Reduces scrap caused by contact between hot sprue and finished parts on conveyor belt or drop chute area
- Provides a more rigid sprue for robotic part removal

"PSB" Series with a 1.000" Diameter Stem

(Interchangeable with DME "B" Series Sprue Bushings)

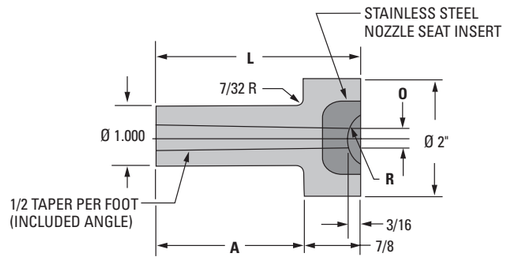

ITEM NUMBER	A	L	O	R
PSB0251	1 3/32	2 3/32	5/32	1/2
PSB0253	1 3/32	2 3/32	5/32	3/4
PSB0271	1 3/32	2 3/32	7/32	1/2
PSB0273	1 3/32	2 3/32	7/32	3/4
PSB0291	1 3/32	2 3/32	9/32	1/2
PSB0293	1 3/32	2 3/32	9/32	3/4
PSB0451	2 3/32	3 3/32	5/32	1/2
PSB0453	2 3/32	3 3/32	5/32	3/4
PSB0471	2 3/32	3 3/32	7/32	1/2
PSB0473	2 3/32	3 3/32	7/32	3/4
PSB0491	2 3/32	3 3/32	9/32	1/2
PSB0493	2 3/32	3 3/32	9/32	3/4
PSB0651	3 3/32	4 3/32	5/32	1/2
PSB0653	3 3/32	4 3/32	5/32	3/4
PSB0671	3 3/32	4 3/32	7/32	1/2
PSB0673	3 3/32	4 3/32	7/32	3/4
PSB0691	3 3/32	4 3/32	9/32	1/2
PSB0693	3 3/32	4 3/32	9/32	3/4
PSB0851	4 3/32	5 3/32	5/32	1/2
PSB0853	4 3/32	5 3/32	5/32	3/4
PSB0871	4 3/32	5 3/32	7/32	1/2
PSB0873	4 3/32	5 3/32	7/32	3/4
PSB0891	4 3/32	5 3/32	9/32	1/2
PSB0893	4 3/32	5 3/32	9/32	3/4

Note: All dimensions are specified in inches.

"PSU" Series with a .750" Diameter Stem

(Interchangeable with DME "U" Series Sprue Bushings)

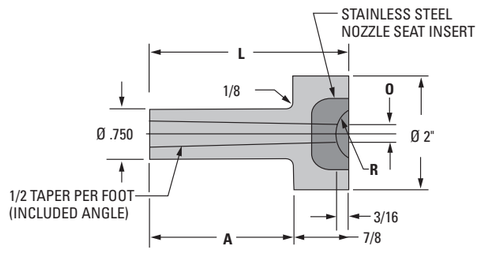

ITEM NUMBER	A	L	O	R
PSU0251	1 3/32	2 3/32	5/32	1/2
PSU0253	1 3/32	2 3/32	5/32	3/4
PSU0271	1 3/32	2 3/32	7/32	1/2
PSU0273	1 3/32	2 3/32	7/32	3/4
PSU0291	1 3/32	2 3/32	9/32	1/2
PSU0293	1 3/32	2 3/32	9/32	3/4
PSU0451	2 3/32	3 3/32	5/32	1/2
PSU0453	2 3/32	3 3/32	5/32	3/4
PSU0471	2 3/32	3 3/32	7/32	1/2
PSU0473	2 3/32	3 3/32	7/32	3/4
PSU0491	2 3/32	3 3/32	9/32	1/2
PSU0493	2 3/32	3 3/32	9/32	3/4
PSU0651	3 3/32	4 3/32	5/32	1/2
PSU0653	3 3/32	4 3/32	5/32	3/4
PSU0671	3 3/32	4 3/32	7/32	1/2
PSU0673	3 3/32	4 3/32	7/32	3/4
PSU0691	3 3/32	4 3/32	9/32	1/2
PSU0693	3 3/32	4 3/32	9/32	3/4
PSU0851	4 3/32	5 3/32	5/32	1/2
PSU0853	4 3/32	5 3/32	5/32	3/4
PSU0871	4 3/32	5 3/32	7/32	1/2
PSU0873	4 3/32	5 3/32	7/32	3/4
PSU0891	4 3/32	5 3/32	9/32	1/2
PSU0893	4 3/32	5 3/32	9/32	3/4

Note: All dimensions are specified in inches.



when ordering, please specify:
1. **Quantity**
2. **Item Number (which indicates "O" and "R" dimensions)**
3. **Method of shipment**

MOLD COMPONENTS – INCH

Copper-Based Alloy Sprue Bushings

Consistently recommended by a wide range of resin manufacturers, molders, moldmakers, designers and engineers, Many users are so pleased with the overall performance of this product that Copper-Based Alloy Sprue Bushings are now specified in all of the molds they build.

Here are several benefits users rave about:

- **Reduced sprue cooling and overall cycle time**
  Mold cycles are often limited or controlled by the length of time needed for solidification of the plastic sprue since it must be cool enough not to break or tear as the mold opens. This cycle limiting condition changes by using this bushing – without any other changes to the mold.

- **Helps prevent sprue sticking, break-off and corrosion**
  With conventional steel sprue bushings, many plastic resins, additives, colorants and combinations lead to corrosion and sticking problems. The inherent corrosion resistance and release properties of the copper alloy used in the sprue bushing results in a significant increase in performance and product life compared to conventional steel sprue bushings.

- **Yields more rigid sprues with reduced sprue cool time for robotic removal of parts**
  The sprue is often used as the grab point in robotic removal of parts, sprues and runners. This requires that the sprue be rigid enough to resist the pressure of the robot fingers as well as the extraction forces. With conventional steel sprue bushings, this often means added cooling time to the mold cycle. The high thermal conductivity of a copper-based alloy reduces sprue cool time, again without any other changes to the mold.

- **Molding problems caused by sprues are eliminated**
  A molders choice for a variety of mold and resin applications say that they are able to control many sprue-related problems. As one molder who uses the product said,"I no longer struggle with sprue problems."

These Sprue Bushings are available in a number of popular standard sizes (see table on facing page), and as non-standards with quick delivery. Contact DME with your next application to reduce sprue cooling and cycle time.

Property Comparisons: Copper Alloy -vs- Steel Sprue Bushings Materials

MATERIAL	THERMAL CONDUCTIVITY AT 68°F BTU/(FT_HR_°F)	THERMAL DIFFUSIVITY AT 68°F FT²/HR
COPPER ALLOY	150	2.32
P20 TOOL STEEL	20	0.39
H13 TOOL STEEL	17	0.31



MOLD COMPONENTS – INCH

Locating Rings for Plastics Molds

Locating Rings 6521 and 6524 are supplied with two 5/16-18 Socket Head Cap Screws. All other Locating Rings supplied with two 5/16-18 Flat Head Screws.



ITEM NO. 6500
Ø **D** = 2.615

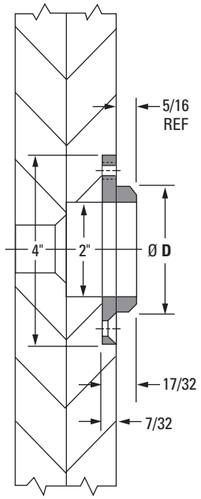

ITEM NO. 6501
Ø **D** = 3.990 (STD. SERIES)

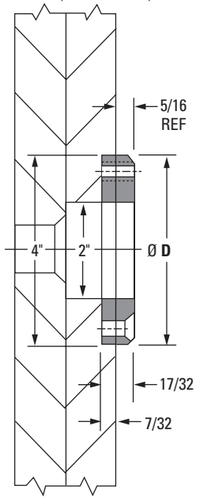

ITEM NO. 6501LN
Ø **D** = 3.990 (LN SERIES)

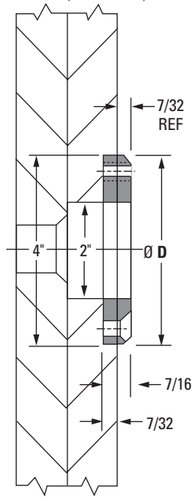

ITEM NO. 6502
Ø **D** = 4.990

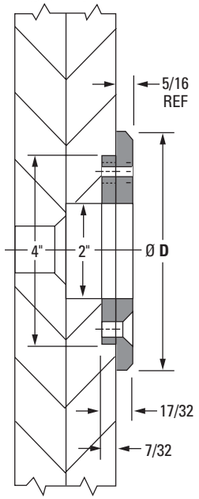

ITEM NO. 6503
Ø **D** = 2.000

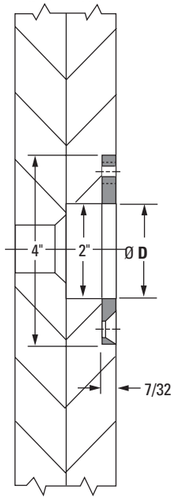

ITEM NO. 6504
Ø **D** = 3.990 (CLAMP TYPE)

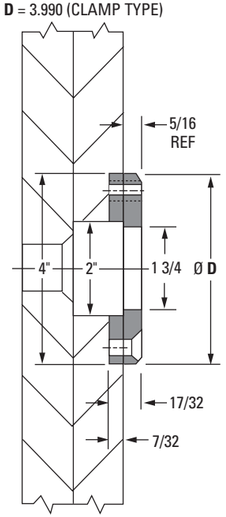

ITEM NO. 6505LN
Ø **D** = 5.990 (LN SERIES)

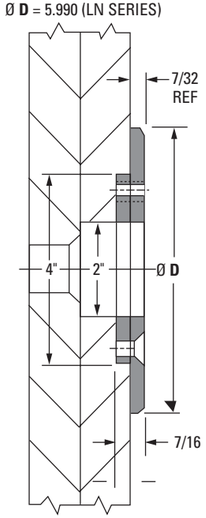

ITEM NO. 6510
Ø **D** = 7.995

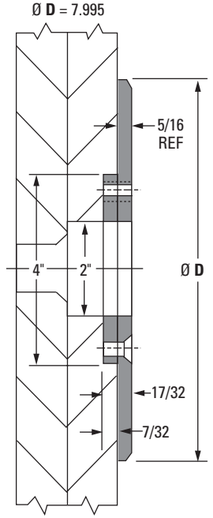

ITEM NO. 6511
Ø **D** = 2.990

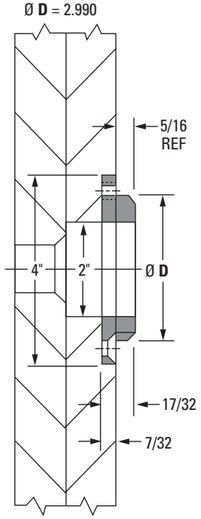

DME

MOLD COMPONENTS – INCH

Locating Rings for Plastics Molds

Dimensions as mounted on standard molds

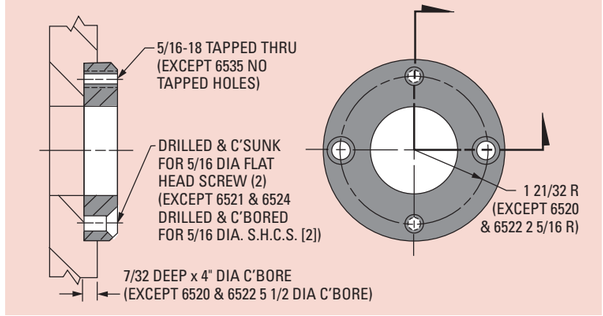

ITEM NO. 6520 Ø **D** = 3.990
(EXTENSION NOZZLE TYPE)

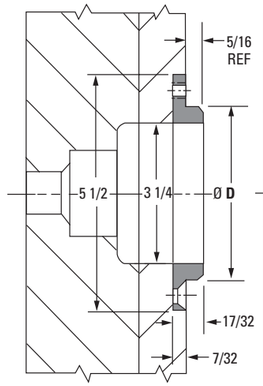

ITEM NO. 6521 Ø **D** = 3.990
(STANDARD SERIES
EXTRA LEAD IN)

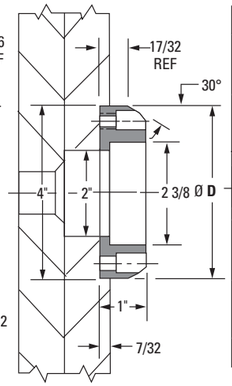

ITEM NO. 6522 Ø **D** = 3.990
(EXTENSION NOZZLE TYPE
EXTRA LEAD IN)

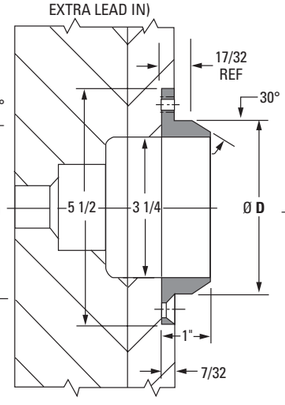

ITEM NO. 6524 Ø **D** = 3.990
(CLAMP TYPE
EXTRA LEAD IN)

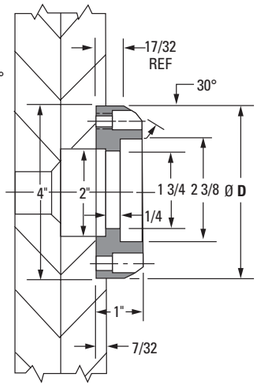

ITEM NO. 6535
Ø **D** = 3.541

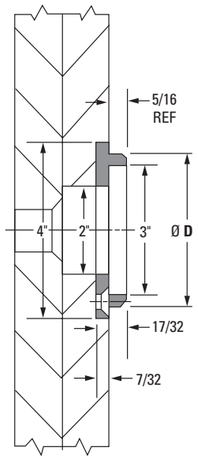

ITEM NO. 6536
Ø **D** = 4.331 (TOP RING)

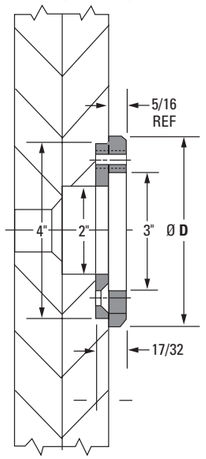

ITEM NO. 6537
Ø **D** = 4.331 (BOTTOM RING)

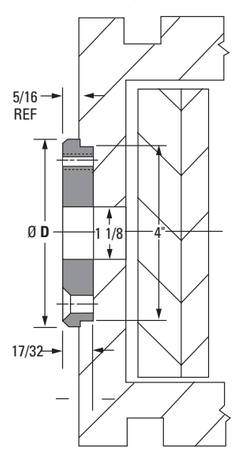

Locating Ring Options

ITEM NUMBER	Ø D	DESCRIPTION
6500	2.615	
6501	3.990	STANDARD SERIES
6501 LN	3.990	LN SERIES
6502	4.990	
6503	2.000	
6504	3.990	CLAMP TYPE
6505 LN	5.990	LN SERIES
6510	7.995	
6511	2.990	
6520	3.990	EXTENSION NOZZLE TYPE
6521	3.990	STANDARD SERIES
6522	3.990	EXTENSION NOZZLE TYPE
6524	3.990	CLAMP TYPE
6534**	1.574	TOP AND BOTTOM RING
6535	3.541	
6536	4.331	TOP RING
6537	4.331	BOTTOM RING
6541*	3.990	STANDARD SERIES
6544*	3.990	CLAMP TYPE

* For use with high-temperature insulator sheets.
** For use with 3.5 x 3.75 Arburg Mold Bases.Details on page 228.

MOLD COMPONENTS – INCH

platenGUARD™ Locating Rings

platenGUARD Locating Rings protect your mold bases and press platens for their entire life cycles. Available in two styles, platenGUARD Locating Rings are a hybrid innovation that is designed to maximize performance efficiencies by preventing forceful contact with platens that will cause nonparallel parting line faces. Flat platens minimize flash from non-planer mounting of the mold halves, reducing mold sampling and repair costs.

platenGUARD Locating Rings consistently excel at their core function of properly locating the mold in the press. Additionally, they create a hands-free mold setting procedure that reduces risk of technician injury and liability.

- Steel substrate effectively locates the mold in the press
- Resilient surfaces protect platen even when balancing is difficult
- Purgings do not adhere to the resilient surface
- Prevents machine platen damage from impact during mold setting
- Increases productivity through improved setting procedure
- Completely retrofittable with standard locating rings
- Made in the U.S.A.



platenGUARD
U.S. AND FOREIGN PATENTS PENDING

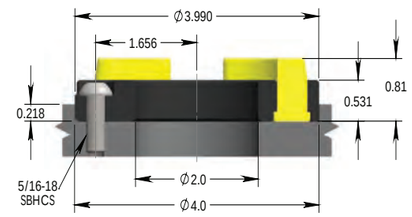

ITEM NUMBER	Ø D	DESCRIPTION
6501PG	3.990	STANDARD

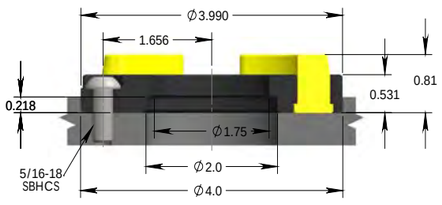

ITEM NUMBER	Ø D	DESCRIPTION
6504PG	3.990	CLAMP TYPE

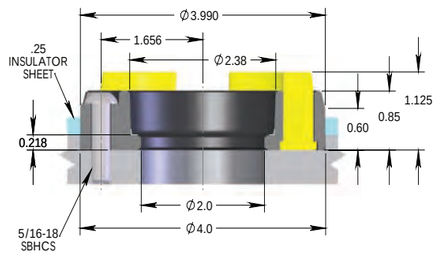

ITEM NUMBER	Ø D	DESCRIPTION
6521PG	3.990	STANDARD

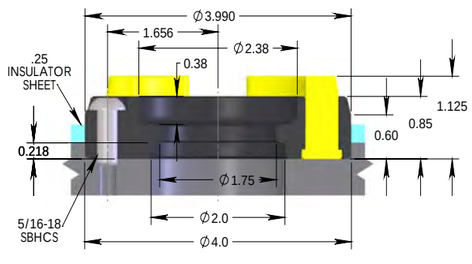

ITEM NUMBER	Ø D	DESCRIPTION
6524PG	3.990	CLAMP TYPE

DME

MOLD COMPONENTS – INCH

Extension Nozzle

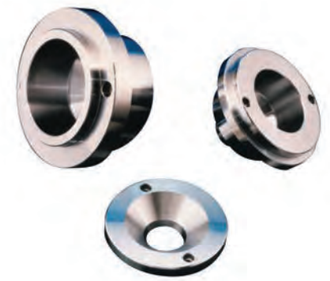

For use with "T-Series" 3-Plate Mold Bases

These 3-plate extension bushings can save material, reduce cycle time and help prevent runner hang-ups in 3-plate molds.

- Reduces sprue length to save material, reduce cycle time and aid in the ejection of the runner from the mold
- Easier, faster installation than competitive bushings … all grinding for final fit is on flat surfaces with no I.D. or O.D. angles to grind
- More sizes than competitive bushings to suit more applications
- Made from AISI 4140 steel, hardened to 28-32 HRC

Runner Stripper Plate Bushing

TEB0001

#10-24 x 1-1/2 long S.H.C.S.
(2) included

Small Extension Nozzle Bushing

TEB0002 thru TEB0005

#10-24 x 1-1/4 long S.H.C.S.
(2) included

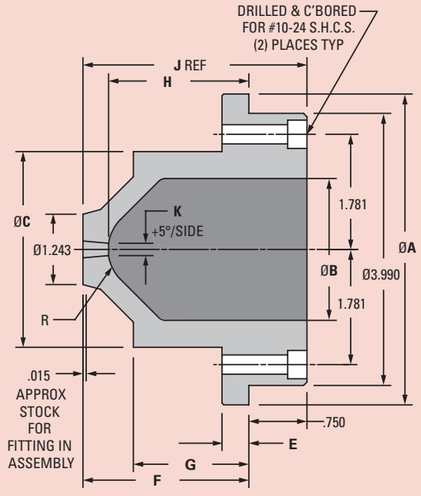

Large Extension Nozzle Bushing

TEB0006 thru TEB0011

5/16-18 x 7/8 long S.H.C.S.
(2) included

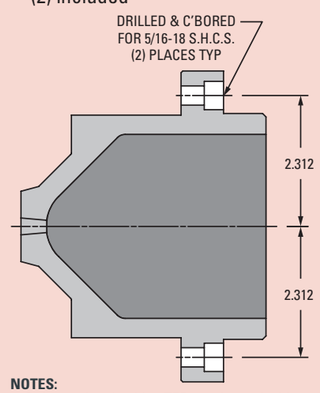

NOTES:
1. Stripper plate bushing TEB0001 is used with all small and large extension nozzle bushings.
2. Appropriate S.H.C.S. are included with all bushings (TEB0001 thru TEB0011).
3. Select small or large bushing based on "A" clamping plate (A.C.P.) thickness, X-1 stripper plate thickness, machine nozzle spherical radius and machine nozzle clearance requirements.

ITEM NUMBER	R SPH RAD	Ø A	Ø B	Ø C	E	F	G	H	J	K
TEB0002	½	4.490	2.375	3.120	.375	2.265	1.377	1.875	3.015	.156
TEB0003	¾							1.812		
TEB0004	½					2.765	1.877	2.375	3.515	
TEB0005	¾							2.312		
TEB0006	½	5.490	3.250	3.932	.750	2.765	1.877	2.375	3.515	
TEB0007	¾							2.312		
TEB0008	½					3.265	2.377	2.875	4.015	
TEB0009	¾							2.812		
TEB0010	½					3.765	2.877	3.375	4.515	.218
TEB0011	¾							3.312		

MOLD COMPONENTS – INCH

3-Plate Extension Bushings – Machining Dimensions

Suggested Mold Base Machining Dimensions

Typical Installations

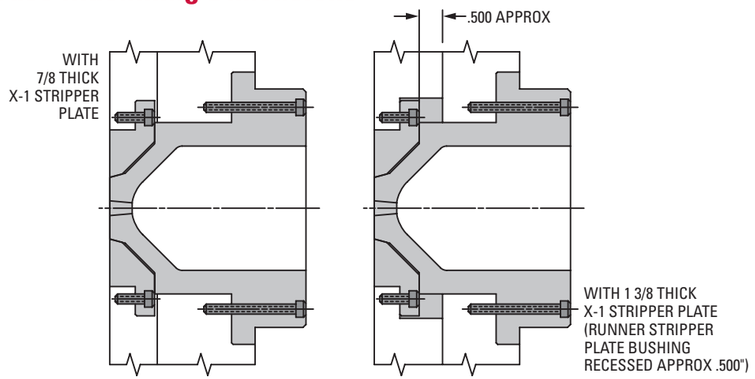

For Runner Stripper Plate Bushing

TEB0001 in X-1 Stripper Plate

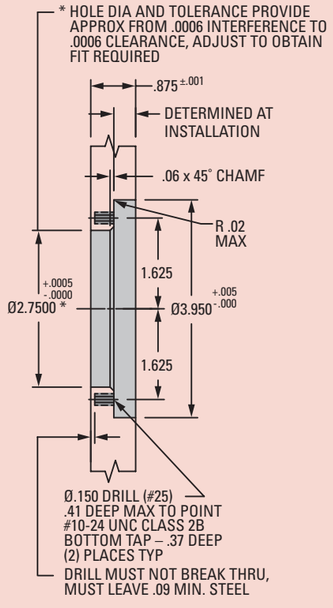

For Extension Nozzle Bushings in "A" Clamping Plate (A.C.P.)

TEB0002 thru TEB0005 (Small Bushings)

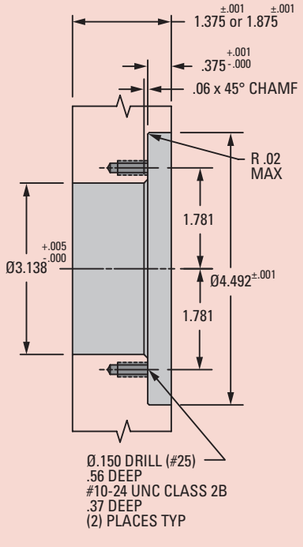

TEB0006 thru TEB0011 (Large Bushings)

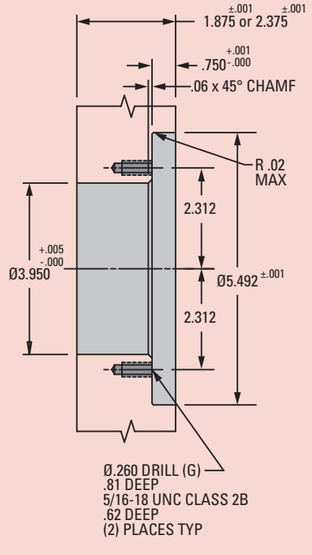

Refer to installation data provided with product. Additional machining and installation data available. Contact DME.

MOLD COMPONENTS – INCH

Guide Pins for Special Mold Tooling Needs

DME Special Straight and Shoulder Guide Pins can be custom-ordered in a wide range of diameters and lengths to suit almost any mold tooling requirement. Made with case-hardened steel for dependable performance and long service life, DME Special Guide Pins feature:

- Diameters up to 3"
- Lengths up to 33-1/2"
- Case-hardened steel (HRC 58-64)
- Close tolerances of .0005" on critical diameters

DME operates a state-of-the-art manufacturing facility to ensure that your quality and delivery goals are met. Extensive resources and efficient processes provide rapid order fulfillment. Advanced manufacturing techniques and trained, dedicated personnel ensure quality.

Contact DME for your special guide pin needs. We can quote your application and process your order immediately (see faxable quote form on next page).

Straight Guide Pins

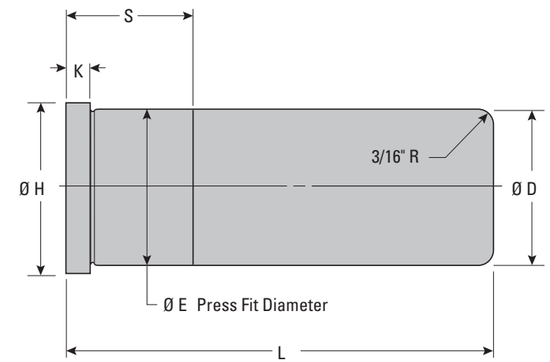

Shoulder Guide Pins

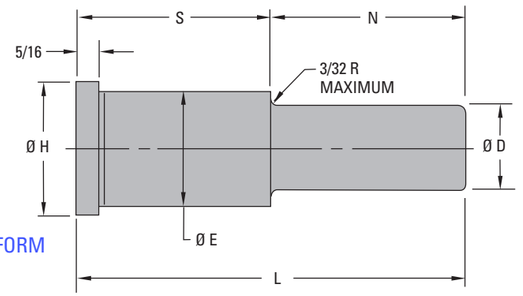

SEE FOLLOWING PAGE FOR SPECIAL GUIDE PIN REQUEST FORM



Straight Guide Pins



Shoulder Guide Pins

MOLD COMPONENTS – INCH

Special Guide Pins – Faxable Quote Form

Quote FAX Hotlines or email customer_service@dme.net

United States 888-808-4363 • Canada 800-461-9965 • International 248-398-7394

Company name:	**DME account #:**
Contact name:	**P.O. #:**
Phone:	**FAX:**
Address:	**E-mail:**
City:	**State/Province:**
ZIP/Postal Code:	**Country:**

Shipping method:

- ❑ **UPS Ground**
- ❑ **UPS 2nd Day Air**
- ❑ **UPS Next Day**
- ❑ **FedEx**
- ❑ **Other_____**

Straight Guide Pins

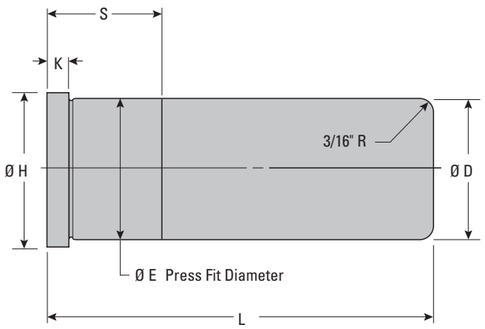

	STANDARD DIMENSIONS (CIRCLE YES OR NO)		REQUESTED DIMENSIONS*	INCH TOLERANCES (STANDARD)
Ø D	YES	NO		+.0000 –.0005
Ø E	YES	NO		+.0005 –.0000
S	YES	NO		+.00 –.06
Ø H	YES	NO		+.00 –.03
L	YES	NO		+.00 –.06
K	YES	NO		+.003 –.005

*All requested dimensions must be specified for quoting.

Quantity: _____ **Pieces**

Shoulder Guide Pins

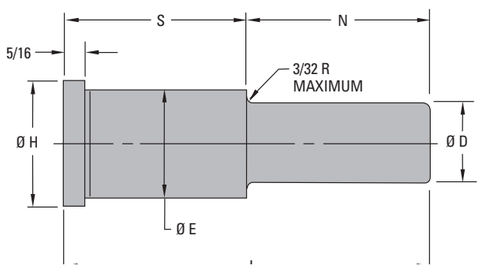

	STANDARD DIMENSIONS (CIRCLE YES OR NO)		REQUESTED DIMENSIONS*	INCH TOLERANCES (STANDARD)
Ø D	YES	NO		+.0000 –.0005
Ø E	YES	NO		+.0005 –.0000
S	YES	NO		+.00 –.03
N	YES	NO		+.00 –.03
Ø H	YES	NO		+.00 –.01
L	YES	NO		+.00 –.06
K	YES	NO		+.003 –.005

*All requested dimensions must be specified for quoting.

Quantity: _____ **Pieces**

MOLD COMPONENTS – INCH

Metric Equivalents and Conversions

Equivalents: Inch, fraction, decimal, millimeter

INCHES	MILLIMETERS	INCHES	MILLIMETERS
1	25.4	34	863.6
2	50.8	35	889.0
3	76.2	36	914.4
4	101.6	37	939.8
5	127.0	38	965.2
6	152.4	39	990.6
7	177.8	40	1016.0
8	203.2	41	1041.4
9	228.6	42	1066.8
10	254.0	43	1092.2
11	279.4	44	1117.6
12	304.8	45	1143.0
13	330.2	46	1168.4
14	355.6	47	1193.8
15	381.0	48	1219.2
16	406.4	49	1244.6
17	431.8	50	1270.0
18	457.2	51	1295.4
19	482.6	52	1320.8
20	508.0	53	1346.2
21	533.4	54	1371.6
22	558.8	55	1397.0
23	584.2	56	1422.4
24	609.6	57	1447.8
25	635.0	58	1473.2
26	660.4	59	1498.6
27	685.8	60	1524.0
28	711.2	61	1549.4
29	736.6	62	1574.8
30	762.0	63	1600.2
31	787.4	64	1625.6
32	812.8	65	1651.0
33	838.2	66	1676.4

INCHES		MILLIMETERS	INCHES		MILLIMETERS
1/64	0.015625	0.396875	33/64	0.515625	13.096875
1/32	0.031250	0.793750	17/32	0.531250	13.493750
3/64	0.046875	1.190625	35/64	0.546875	13.890625
1/16	0.062500	1.587500	9/16	0.562500	14.287500
5/64	0.078125	1.984375	37/64	0.578125	14.684375
3/32	0.093750	2.381250	19/32	0.593750	15.081250
7/64	0.109375	2.778125	39/64	0.609375	15.478125
1/8	0.125000	3.175000	5/8	0.625000	15.875000
9/64	0.140625	3.571875	41/64	0.640625	16.271875
5/32	0.156250	3.968750	21/32	0.656250	16.668750
11/64	0.171875	4.365625	43/64	0.671875	17.065625
3/16	0.187500	4.762500	11/16	0.687500	17.462500
13/64	0.203125	5.159375	45/64	0.703125	17.859375
7/32	0.218750	5.556250	23/32	0.718750	18.256250
15/64	0.234375	5.953125	47/64	0.734375	18.653125
1/4	0.250000	6.350000	3/4	0.750000	19.050000
17/64	0.265625	6.746875	49/64	0.765625	19.446875
9/32	0.281250	7.143750	25/32	0.781250	19.843750
19/64	0.296875	7.540625	51/64	0.796875	20.240625
5/16	0.312500	7.937500	13/16	0.812500	20.637500
21/64	0.328125	8.334375	53/64	0.828125	21.034375
11/32	0.343750	8.731250	27/32	0.843750	21.431250
23/64	0.359375	9.128125	55/64	0.859375	21.828125
3/8	0.375000	9.525000	7/8	0.875000	22.225000
25/64	0.390625	9.921875	57/64	0.890625	22.621875
13/32	0.406250	10.318750	29/32	0.906250	23.018750
27/64	0.421875	10.715625	59/64	0.921875	23.415625
7/16	0.437500	11.112500	15/16	0.937500	23.812500
29/64	0.453125	11.509375	61/64	0.953125	24.209375
15/32	0.468750	11.906250	31/32	0.968750	24.606250
31/64	0.484375	12.303125	63/64	0.984375	25.003125
1/2	0.500000	12.700000	1	1.000000	25.400000

Equivalents: Decimal, millimeter

INCHES	MILLIMETERS	INCHES	MILLIMETERS	INCHES	MILLIMETERS
0.001	0.0254	0.01	0.254	0.1	2.54
0.002	0.0508	0.02	0.508	0.2	5.08
0.003	0.0762	0.03	0.762	0.3	7.62
0.004	0.1016	0.04	1.016	0.4	10.16
0.005	0.1270	0.05	1.270	0.5	12.70
0.006	0.1524	0.06	1.524	0.6	15.24
0.007	0.1778	0.07	1.778	0.7	17.78
0.008	0.2032	0.08	2.032	0.8	20.32
0.009	0.2286	0.09	2.286	0.9	22.86

Measurement conversions

MULTIPLY BY	FROM → TO	TO ← FROM	MULTIPLY BY
0.03937	inch	millimeter	25.4
0.0016	$inch^2$	$millimeter^2$	645.16
0.061	$inch^3$	$centimeter^3$	16.3871
0.2642	gallon (U.S.)	liter	3.7854
0.03527	oz. (avdp.)	gram	28.3495
2.2044	pound	kilogram	0.4536
62.43	lbs/ft^3	g/cm^3	0.0160
0.145	psi	kPa	6.8948
14.2247	psi	kg/cm^2	0.0703
1.8°C + 32	°F	°C	(°F-32)/1.8



DME MOLD COMPONENTS – METRIC

FEATURING HIGH-QUALITY GUIDE PINS, BUSHINGS, SUPPORT PILLARS, ETC.

MOLD COMPONENTS – METRIC

A comprehensive line of Euro-Series Mold Components

Guide Pins ..... 291 to 294, 296 to 297



Angle Pins..... 295



Guide Pin Bushings .....298 to 300
Centering Bushing (Locating Sleeve) & Tubular Dowels .. 301



Locating Rings..... 302
Sprue Bushings 303



Support Pillars 304

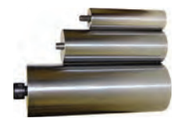

Dowel Pins..... 305



Socket Head Cap Screws
& Lock Washers 306



Stop Disks & Screws 307



Gate Cutters 308



MOLD COMPONENTS – METRIC

Table of Contents

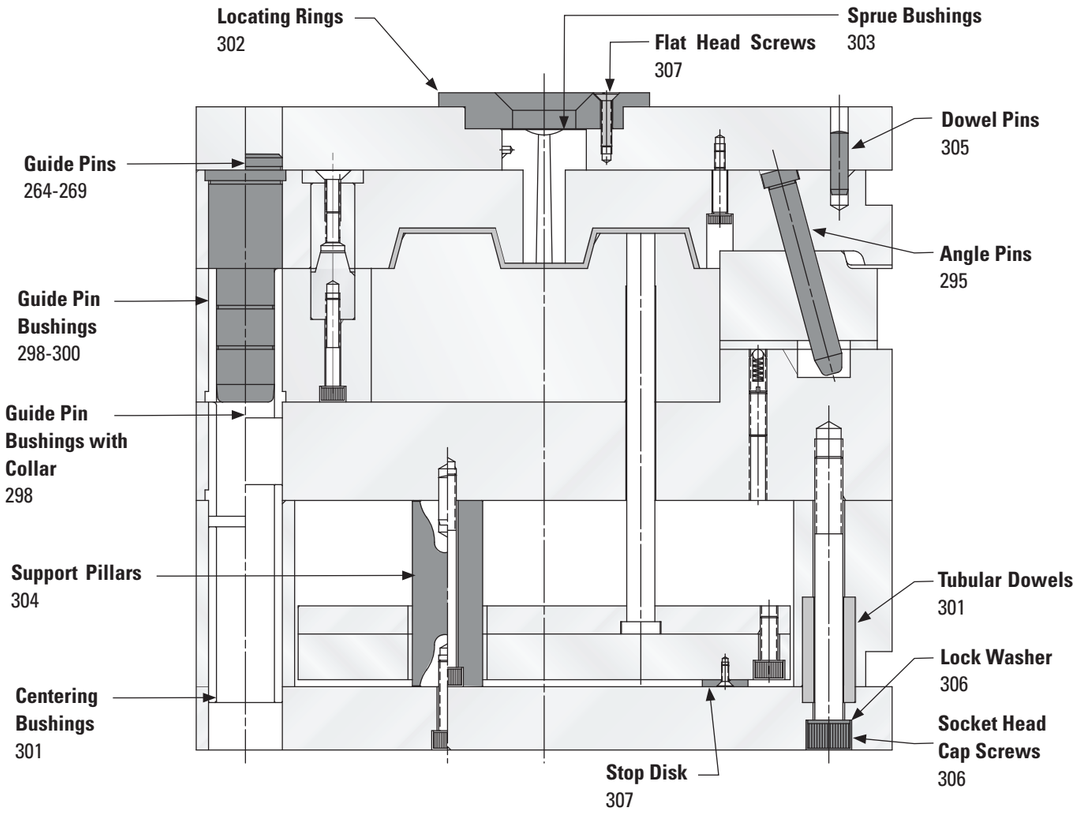

GUIDE PINS

MLP 291
GDP-EC (WITH COLLAR) 292-294
GDP-ES (WITHOUT COLLAR) 296-297

ANGLE PINS

APD (ANGLE PIN) 295

GUIDE PIN BUSHINGS

GDB-ECS (WITH COLLAR) 298
GDB-ECL (SELF-LUBE WITH COLLAR) 298
BRONZE-PLATED (WITH SHOULDER) 299
BRONZE-PLATED GUIDED EJECTION 299
SELF LUBRICATING GUIDED EJECTION 299
GDB-ESS (WITHOUT COLLAR) 300
GDB-ESL (SELF-LUBE WITHOUT COLLAR) 300

CENTERING BUSHINGS, TUBULAR DOWELS & DOWEL PINS

R05 (CENTERING BUSHING – LOCATING SLEEVE) 301
R09 (TUBULAR DOWEL) 301
R091 (WASHER – DISK FOR TUBULAR DOWEL) 301
DP (DOWEL PIN) 305
WZ7005 (DOWEL PIN WITH INTERNAL THREAD) 305

LOCATING RINGS

DHR21 (WITH MOUNTING HOLES) 302
R20 (SOLID) 302

SPRUE BUSHINGS

DHR74 (NO RADIUS) 303
DHR76 (15.5MM RADIUS) 303
DHR78 (40.0MM RADIUS) 303

SUPPORT PILLARS

FW28 (WITH DRILLED & COUNTERBORED HOLE) 304
FW29 (WITH TAPPED HOLE FOR DOWEL) 304

BOLTS, SCREWS & LOCK WASHERS

M (SOCKET HEAD CAP SCREW) 306
R54 (LOCK WASHER – SPRING WASHER) 306
SM (FLAT HEAD SCREW) 307

STOP DISK (FOR EJECTOR PLATES)

R18 (STOP DISK) 307

DME

MOLD COMPONENTS – METRIC

Leader Pins – Metric



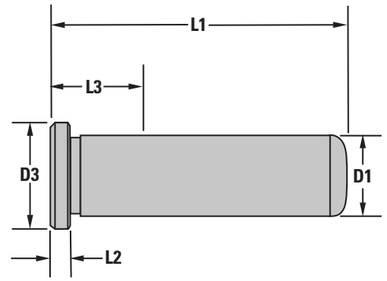

20mm through 60mm (Not all pins are ground on centers.)

GENERAL DIMENSIONS				
NOM. PIN DIA.	D1 +0.000 –0.013	D2 +0.013 –0.000	D3 +0.00 –0.26	L2 +0.00 –0.05
20	19.975	20.025	25.00	5.00
25	24.975	25.025	31.00	6.00
30	29.975	30.025	36.00	8.00
40	39.975	40.025	46.00	8.00
50	49.975	50.025	56.00	8.00
60	59.975	60.025	66.00	8.00

LEADER PINS – METRIC

L1 OVERALL LENGTH	NOMINAL DIA. 20mm		NOMINAL DIA. 25mm		NOMINAL DIA. 30mm		NOMINAL DIA. 40mm		NOMINAL DIA. 50mm		NOMINAL DIA. 60mm	
	ITEM NUMBER	L3	ITEM NUMBER	L3	ITEM NUMBER	L3	ITEM NUMBER	L3	ITEM NUMBER	L3	ITEM NUMBER	L3
50mm	MLP2050	25mm	MLP2550	25mm		25mm						
60mm	MLP2060	25mm	MLP2560	25mm		25mm						
70mm	MLP2070	25mm	MLP2570	25mm	MLP3070	25mm						
80mm	MLP2080	25mm	MLP2580	25mm	MLP3080	25mm						
90mm	MLP2090	25mm	MLP2590	25mm	MLP3090	25mm	MLP4090	35mm				
100mm	MLP20100	25mm	MLP25100	25mm	MLP30100	25mm	MLP40100	35mm				
120mm	MLP20120	35mm	MLP25120	35mm	MLP30120	35mm	MLP40120	35mm				
140mm	MLP20140	35mm	MLP25140	35mm	MLP30140	35mm	MLP40140	35mm				
150mm									MLP50150	45mm	MLP60150	60mm
160mm	MLP20160	45mm	MLP25160	35mm	MLP30160	35mm	MLP40160	35mm				
175mm									MLP50175	45mm	MLP60175	60mm
180mm	MLP20180	45mm	MLP25180	45mm	MLP30180	45mm	MLP40180	45mm				
200mm	MLP20200	45mm	MLP25200	45mm	MLP30200	45mm	MLP40200	45mm	MLP50200	45mm	MLP60200	60mm
220mm	MLP20220	45mm	MLP25220	45mm	MLP30220	45mm	MLP40220	45mm				
225mm									MLP50225	45mm	MLP60225	60mm
240mm	MLP20240	45mm	MLP25240	45mm	MLP30240	45mm	MLP40240	45mm				
250mm									MLP50250	45mm	MLP60250	60mm
260mm			MLP25260	45mm	MLP30260	45mm	MLP40260	45mm				
275mm									MLP50275	45mm	MLP60275	60mm
280mm			MLP25280	45mm	MLP30280	45mm	MLP40280	45mm				
300mm			MLP25300	45mm	MLP30300	45mm	MLP40300	45mm	MLP50300	45mm	MLP60300	60mm
325mm									MLP50325	45mm	MLP60325	60mm
350mm									MLP50350	45mm	MLP60350	60mm
375mm									MLP50375	45mm	MLP60375	60mm
400mm									MLP50400	45mm	MLP60400	60mm

MOLD COMPONENTS – METRIC

Guide Pins (with Collar)

Guide Pins (with Collar) – GDP-EC

Pernos guia con collar | Guias principais | Colonnes de guidage (avec épaulement) | Führungsbolzen (mit Bund)

INFORMATION KEY:

D = Pin Body Diameter
E = Shoulder Diameter
H = Head Diameter
K = Head Thickness
N = Pin Body Length
S = Shoulder Length
T = Collar Length
Standard: Euro-Series
Material: 1.7131 (AISI 5115 Type) Steel
Surface Treatment: Case Hardened
Dimensions: Shown in Millimeters (mm)

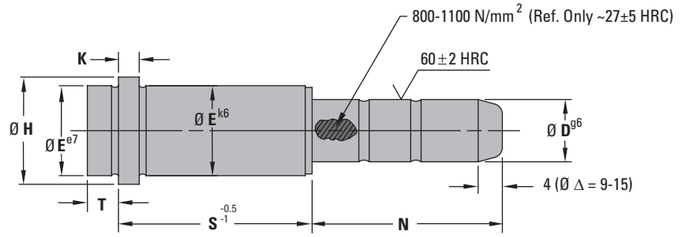

ITEM PREFIX	D	E	H	K	T	S	N																				
							020	025	030	035	045	050	055	060	065	070	075	085	090	095	105	110	125	135	145	150	155	165
GDP-EC (R02)*	09 OR 10	14	16	3	3	012																					
						017																					
						022		⚡																			
						027			⚡																		
						036		⚡			⚡																
						046																					
						056																					
GDP-EC (R02)*	14 OR 15	20	25	6	9	017																					
						022			⚡			⚡															
						027			⚡		⚡				⚡												
						036				⚡			⚡														
						046				⚡	⚡				⚡												
						056				⚡			⚡														
						066							⚡														
						076																					
						086																					
						096																					
						116																					

* "(R02)" is only a cross-reference to current DME Europe Catalog item prefix numbers.

HOW TO ORDER: Specify Item Number with prefix, D diameter, S length, and N length. Include zeros and dashes but omit decimals, as shown.

Prefix GDP-EC - D - S - N

Example: **Prefix D S N** GDP-EC-09-027-020

Example: **Prefix D S N** GDP-EC-14-066-055

KEY TO CHART

⚡ **Items in stock**
2-3 week delivery
Contact DME for quote

DME

MOLD COMPONENTS – METRIC

Guide Pins (with Collar)

Guide Pins (with Collar) – GDP-EC

Pernos guia con collar | Guias principais | Colonnes de guidage (avec épaulement) | Führungsbolzen (mit Bund)

INFORMATION KEY:

D = Pin Body Diameter
E = Shoulder Diameter
H = Head Diameter
K = Head Thickness
N = Pin Body Length
S = Shoulder Length
T = Collar Length
Standard: Euro-Series
Material: 1.7131 (AISI 5115 Type) Steel
Surface Treatment: Case Hardened
Dimensions: Shown in Millimeters (mm)

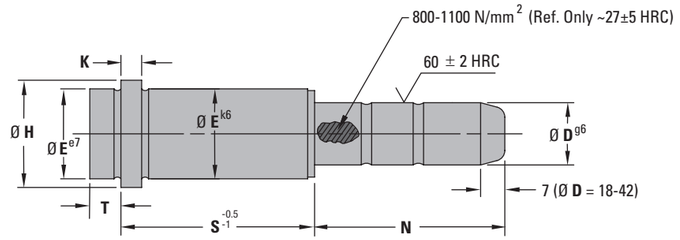

ITEM PREFIX	D	E	H	K	T	S	N																				
							035	045	055	065	075	085	095	105	115	120	125	130	135	145	155	165	205	225	245	255	285
GDP-EC (R02)*	18 OR 20	26	31	6	9	017																					
						022																					
						027	⚡	⚡		⚡		⚡															
						036	⚡		⚡		⚡		⚡														
						046	⚡	⚡		⚡		⚡		⚡													
						056	⚡		⚡		⚡		⚡														
						066			⚡		⚡																
						076			⚡		⚡																
						086																					
						096							⚡														
						116																					
						136																					
GDP-EC (R02)*	22 OR 24	30	35	6	9	017																					
						022																					
						027	⚡	⚡		⚡		⚡		⚡													
						036	⚡		⚡		⚡		⚡		⚡				⚡				⚡	⚡		⚡	
						046	⚡	⚡		⚡		⚡		⚡			⚡						⚡	⚡			
						056	⚡		⚡		⚡		⚡		⚡								⚡				
						066			⚡		⚡		⚡									⚡					
						076			⚡		⚡		⚡		⚡												
						086			⚡		⚡		⚡						⚡								
						096			⚡		⚡		⚡				⚡										
						116					⚡			⚡							⚡						
						136						⚡							⚡								
						156																					

* "(R02)" is only a cross-reference to current DME Europe Catalog item prefix numbers.

HOW TO ORDER: Specify Item Number with prefix, D diameter, S length, and N length. Include zeros and dashes but omit decimals, as shown.

Prefix GDP-EC - D - S - N

Example: **Prefix D S N** GDP-EC-18-056-035

Example: **Prefix D S N** GDP-EC-22-116-155

KEY TO CHART

⚡ **Items in stock**
2-3 week delivery
Contact DME for quote

MOLD COMPONENTS – METRIC

Guide Pins (with Collar)

Guide Pins (with Collar) – GDP-EC

Pernos guia con collar | Guias principais | Colonnes de guidage (avec épaulement) | Führungsbolzen (mit Bund)

INFORMATION KEY:

D = Pin Body Diameter
E = Shoulder Diameter
H = Head Diameter
K = Head Thickness
N = Pin Body Length
S = Shoulder Length
T = Collar Length
Standard: Euro-Series
Material: 1.7131 (AISI 5115 Type) Steel
Surface Treatment: Case Hardened
Dimensions: Shown in Millimeters (mm)

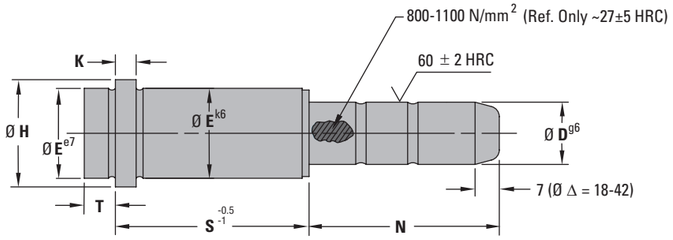

ITEM PREFIX	D	E	H	K	T	S	N: 045	055	065	075	085	095	105	115	125	135	155	165	175	185	195	205	215	225	235	245	285	295
GDP-EC (R02)*	30 OR 32	42	47	6	9	027																						
						036																						
						046																						
						056				⚡																		
						066					⚡																	
						076				⚡		⚡		⚡			⚡											
						086				⚡		⚡																
						096				⚡		⚡		⚡			⚡											
						116				⚡				⚡			⚡											
						136								⚡			⚡											
						156								⚡			⚡											
						196											⚡											
						046																						
GDP-EC (R02)*	40 OR 42	54	60	10	12	056																						
						066																						
						076																						
						086																						
						096																						
						116																						
						136																						
						156																						
						196																						
						246																						

* "(R02)" is only a cross-reference to current DME Europe Catalog item prefix numbers.

HOW TO ORDER: Specify Item Number with prefix, D diameter, S length, and N length. Include zeros and dashes but omit decimals, as shown.

Prefix GDP-EC - [D] - [S] - [N]

Example:
Prefix D S N
GDP-EC-30-096-075

Example:
Prefix D S N
GDP-EC-42-246-245

KEY TO CHART

⚡ **Items in stock**
2-3 week delivery
Contact DME for quote

MOLD COMPONENTS – METRIC

Angle Pins

Angle Pins – APD

PERNOS DE ÁNGULO | GUIAS DE MOVIMENTOS | EPINGLES ANGLEES | WINKELSTIFTE

INFORMATION KEY:

D = Pin Body Diameter
H = Head Diameter
K = Head Thickness
L = Pin Length
N = Lead in Taper Length
Standard: DIN Type
Material: 1.7131 (AISI 5115 Type) Steel
Surface Treatment: Case Hardened
Dimensions: Shown in Millimeters (mm)

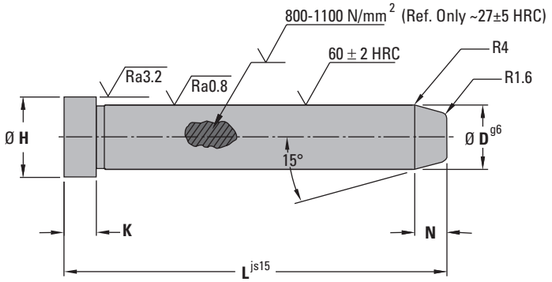

ITEM PREFIX	D	H	K	N	L: 40	60	80	100	120	140	160	180	200	210	220	230	240	250	270	300	360
APD	10	12	3	5	⚡		⚡			⚡											
	12	16	6	5			⚡	⚡	⚡	⚡	⚡										
	14	18	8	6					⚡	⚡	⚡	⚡	⚡		⚡						
	16	20	8	7				⚡	⚡	⚡	⚡	⚡	⚡		⚡						
	18	22	8	8							⚡	⚡	⚡			⚡					
	20	24	8	8					⚡	⚡	⚡	⚡	⚡				⚡				
	22	26	15	8																	
	24	28	15	8						⚡			⚡		⚡						
	30	34	15	8								⚡					⚡		⚡	⚡	
	40	48	15	10													⚡			⚡	
	50	58	15	10													⚡			⚡	⚡

HOW TO ORDER: Specify Item Number with prefix, D diameter and L length. Include zeros as shown, but omit all spaces (spaces are only shown here for easier reading)

Prefix [APD] - [D] - [L]

Example:
Prefix D L
APD 10 40

Example:
Prefix D L
APD 50 360

KEY TO CHART

⚡ **Items in stock**
2-3 week delivery
Contact DME for quote

MOLD COMPONENTS – METRIC

Guide Pins (without Collar)

Guide Pins (without Collar) – GDP-ES

Pernos guia | Guias | Colonnes de guidage (sans épaulement) | Führungsbolzen (ohne Bund)

INFORMATION KEY:

D = Pin Body Diameter
E = Shoulder Diameter
H = Head Diameter
K = Head Thickness
N = Pin Body Length
S = Shoulder Length
Standard: Euro-Series
Material: 1.7131 (AISI 5115 Type) Steel
Surface Treatment: Case Hardened
Dimensions: Shown in Millimeters (mm)

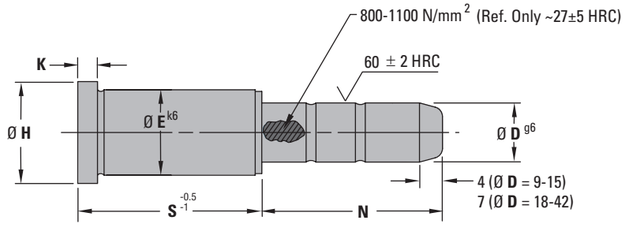

ITEM PREFIX	D	E	H	K	S	N 020	025	030	035	040	045	050	055	060	065	070	075	080	085	090	095	105	110	115	125	135	165
GDP-ES (RO1)*	09 OR 10	14	16	3	017																						
					022																						
					027																						
					036																						
					046																						
GDP-ES (RO1)*	14 OR 15	20	25	6	022																						
					027								⚡		⚡												
					036				⚡		⚡		⚡														
					046																						
					056																						
					066																						
					076																						
					086																						
GDP-ES (RO1)*	18 OR 20	26	31	6	022																						
					027								⚡		⚡				⚡			⚡					
					036				⚡		⚡		⚡		⚡		⚡					⚡					
					046						⚡				⚡				⚡			⚡					⚡
					056				⚡				⚡														
					066								⚡														
					076																						
					086																						
					096																						
					116																						

* "(R01)" is only a cross-reference to current DME Europe Catalog item prefix numbers.

HOW TO ORDER: Specify Item Number with prefix, D diameter, S length, and N length. Include zeros and dashes but omit decimals, as shown.

Prefix GDS-ES - D - S - N

Example: Prefix D S N GDP-ES-14-036-035

Example: Prefix D S N GDP-ES-18-046-165

KEY TO CHART

⚡ **Items in stock**
2-3 week delivery
Contact DME for quote

DME

MOLD COMPONENTS – METRIC

Guide Pins (without Collar)

Guide Pins (without Collar) – GDP-ES

Pernos guia | Guias | Colonnes de guidage (sans épaulement) | Führungsbolzen (ohne Bund)

INFORMATION KEY:

D = Pin Body Diameter
E = Shoulder Diameter
H = Head Diameter
K = Head Thickness
N = Pin Body Length
S = Shoulder Length
Standard: Euro-Series
Material: 1.7131 (AISI 5115 Type) Steel
Surface Treatment: Case Hardened
Dimensions: Shown in Millimeters (mm)

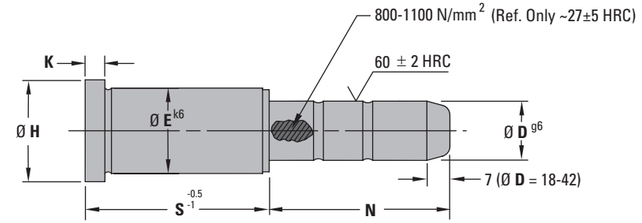

ITEM PREFIX	D	E	H	K	S	N 025	045	050	055	060	065	070	075	080	085	095	105	115	125	135	155	165	175	195	215	235
GDP-ES (RO1)*	22 OR 24	30	35	6	027		⚡																			
					036		⚡		⚡							⚡		⚡		⚡						
					046		⚡				⚡						⚡		⚡							
					056		⚡		⚡				⚡													
					066				⚡				⚡			⚡										
					076																					
					086																					
					096																					
					116																					
					136																					
GDP-ES (RO1)*	30 OR 32	42	47	6	027																					
					036																					
					046																					
					056				⚡				⚡													
					066				⚡				⚡													
					076								⚡													
					086				⚡				⚡													
					096								⚡													
					116								⚡													
					136																					
					156																					
					196																					
GDP-ES (RO1)*	40 OR 42	54	60	10	056																					
					066																					
					076																					
					086																					
					096																					
					116																					
					136																					
					156																					
					196																					

* "(R01)" is only a cross-reference to current DME Europe Catalog item prefix numbers.

HOW TO ORDER: Specify Item Number with prefix, D diameter, S length, and N length. Include zeros and dashes but omit decimals, as shown.

Prefix GDP-ES - D - S - N

Example: Prefix D S N GDP-ES-22-027-045

Example: Prefix D S N GDP-ES-40-115-156

KEY TO CHART

⚡ **Items in stock**
2-3 week delivery
Contact DME for quote

MOLD COMPONENTS – METRIC

Guide Pin Bushings (with Collar) Self-Lube Guide Pin Bushings (with Collar) – GDB-ECL

Guide Pin Bushings (with Collar) – GDB-ECS

Bujes guia con collar | Casquilhos | Douilles de guidage (avec épaulement) | Führungsbuchse (mit Bund)

INFORMATION KEY:
D = Inside Diameter
E = Outside Diameter
H = Head Diameter
K = Head Thickness
N = Bushing Length from Head
T = Collar Length
Standard: Euro-Series
Material: 1.7131 (AISI 5115 Type) Steel
Surface Treatment: Case Hardened
Dimensions: Shown in Millimeters (mm)

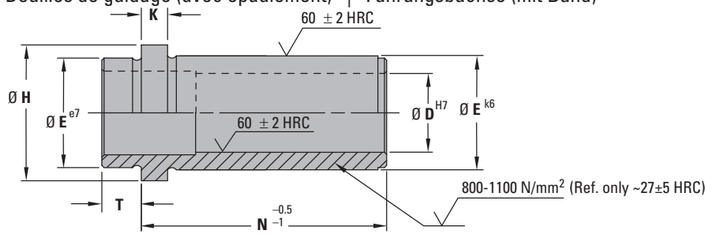

ITEM PREFIX	D	E	H	K	T	N 017	022	027	036	046	056	066	076	086	096	116	136	156	196	246
GDB-ECS (R04)*	14 OR 15	20	25	6	9		⚡	⚡	⚡	⚡	⚡			⚡						
	18 OR 20	26	31	6	9			⚡	⚡	⚡	⚡	⚡		⚡						
	22 OR 24	30	35	6	9			⚡	⚡	⚡	⚡	⚡	⚡	⚡	⚡					
	30 OR 32	42	47	6	9							⚡		⚡	⚡	⚡	⚡			
	40 OR 42	54	60	10	12															

* "(R04)" is only a cross-reference to current DME Europe Catalog item prefix numbers.

HOW TO ORDER: Specify Item Number with prefix, D diameter, and N length. Include zeros and dashes but omit decimals, as shown.

Prefix GDB-ECS - D - N

Example: Prefix D N GDB-ECS-18-036

Example: Prefix D N GDB-ECS-32-116

KEY TO CHART
⚡ Items in stock
2-3 week delivery
Contact DME for quote

Self-Lube Guide Pin Bushings (with Collar) – GDB-ECL

Bujes guia autolubricados, con collar | Casquilhos auto-lubrificantes con guiamento | Douilles de Guidage autolubrifiantes à collerette | Selbstschmierende Führungsbuchsen (mit Bund)

INFORMATION KEY:
D = Inside Diameter
E = Outside Diameter
H = Head Diameter
K = Head Thickness
N = Bushing Length from Head
T = Collar Length
Standard: Euro-Series
Material: 2.0975 with Graphite Plugs 200HB
Dimensions: Shown in Millimeters (mm)

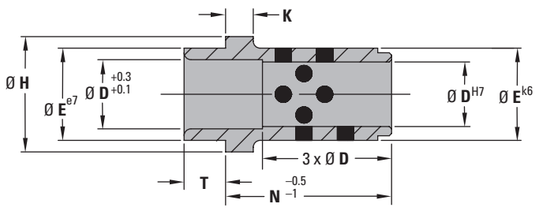

ITEM PREFIX	D	E	H	K	T	N 017	022	027	036	046	056	066	076	086	096	116	136	156
GDB-ECL (R04W)*	09 OR 10	14	18	3	3			⚡	⚡									
	14 OR 15	20	25	6	9			⚡	⚡	⚡								
	18 OR 20	26	31	6	9			⚡	⚡	⚡		⚡						
	22 OR 24	30	35	6	9			⚡	⚡	⚡		⚡	⚡					
	30 OR 32	42	47	6	9									⚡	⚡			
	40 OR 42	54	60	10	12													

* "(R04)" is only a cross-reference to current DME Europe Catalog item prefix numbers.

HOW TO ORDER: Specify Item Number with prefix, D diameter, and N length. Include zeros and dashes but omit decimals, as shown.

Prefix GDB-ECL - D - N

Example: Prefix D N GDB-ECL-09-036

Example: Prefix D N GDB-ECL-30-096

KEY TO CHART
⚡ Items in stock
2-3 week delivery
Contact DME for quote

DME

MOLD COMPONENTS – METRIC

Bronze-Plated Shoulder Bushings, Ejection Bushings, & Self Lubricating Guided Ejection Bushings – Metric

Bronze-Plated Shoulder Bushings – METRIC

Precision-ground steel with exclusive bronze plating, these are the only bushings that have oil grooves and a true bushing surface that extends the full length of the bushing. DME Bronze Bushings perform smoother and longer than plain steel bushings. Selected lubricant is distributed throughout the bearing surface by the figure-8 oil groove system. The bronze surface will not gall.

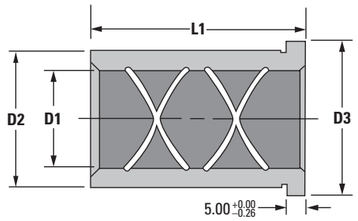

NOMINAL I.D.	GENERAL DIMENSIONS D1 +.013 -.0000	D2 +.013 -.0000	D3 +.000 -.030
20	20.013	26.013	28.00
25	25.013	32.013	35.00
30	30.013	38.013	41.00
40	40.013	50.013	53.00
50	50.013	60.013	63.00
60	60.013	70.013	73.00



L LENGTH +0.00 -0.76	INSIDE DIAMETER 20mm	25mm	30mm	40mm	50mm	60mm
25.00	LBBM2025	LBBM2525	LBBM3025	LBBM4025		
30.00	LBBM2030	LBBM2530	LBBM3030	LBBM4030	LBBM5030	LBBM6030
40.00	LBBM2040	LBBM2540	LBBM3040	LBBM4040	LBBM5040	LBBM6040
50.00	LBBM2050	LBBM2550	LBBM3050	LBBM4050	LBBM5050	LBBM6050
65.00	LBBM2065	LBBM2565	LBBM3065	LBBM4065	LBBM5065	LBBM6065
80.00	LBBM2080	LBBM2580	LBBM3080	LBBM4080	LBBM5080	LBBM6080
100.00	LBBM20100	LBBM25100	LBBM30100	LBBM40100	LBBM50100	LBBM60100
120.00	LBBM20120	LBBM25120	LBBM30120	LBBM40120	LBBM50120	LBBM60120
140.00	–	LBBM25140	LBBM30140	LBBM40140	LBBM50140	LBBM60140
150.00	–	LBBM25150	LBBM30150	LBBM40150	LBBM50150	LBBM60150

Bronze-Plated Guided Ejection Bushings – METRIC

ITEM NUMBER	NOMINAL I.D.	D1 +0.013 -0.000	D2 +0.013 -0.000	D3 +0.00 -0.13	D4 +0.000 -0.026	L1 +0.00 -0.76	L2 +0.00 -0.26	L3 +0.00 -0.38	L5 +0.13
GEBM20	20	20.013	26.013	28.00	26.00	37.00	5.00	25.00	15.00
GEBM25	25	25.013	32.013	35.00	32.00	45.00		29.00	16.00
GEBM30	30	30.013	38.013	41.00	38.00	45.00		29.00	16.00

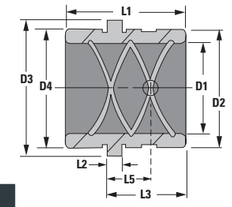



ITEM NUMBER	NOMINAL I.D.	D1 +0.013 -0.000	D2 +0.013 -0.000	D3 +0.00 -0.13	D4 +0.000 -0.026	L1 +0.00 -0.76	L2 +0.00 -0.26	L3 +0.00 -0.38
GBEM2037	20	20.013	26.013	28.00	26.00	37.00	5.00	25.00
GBEM2545	25	25.013	32.013	35.00	32.00	45.00		29.00
GBEM3045	30	30.013	38.013	41.00	38.00	45.00		29.00

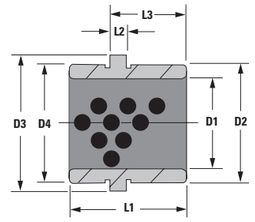

- Self lubricating
- Consistent quality control
- Resists abrasion
- Excellent wear characteristics

All items in stock.



NOTES:
1. Select corresponding guide pin in proper diameter and length for application.
2. These bushings are interchangeable with comparably sized DME bronze-plated and solid bronze guided ejection bushings.

MOLD COMPONENTS – METRIC

Guide Pin Bushings (without Collar) Self-Lube Guide Pin Bushings (without Collar)

Guide Pins Bushings (without Collar) – GDB-ESS

Bujes guia | Casquilhos | Douilles de guidage (sans épaulement) | Führengsbuchse (ohne Bund)

INFORMATION KEY:
D = Inside Diameter
E = Outside Diameter
H = Head Diameter
K = Head Thickness
L = Bushing Length
Standard: Euro-Series
Material: 1.7131 (AISI 5115 Type) Steel
Surface Treatment: Case Hardened
Dimensions: Shown in Millimeters (mm)

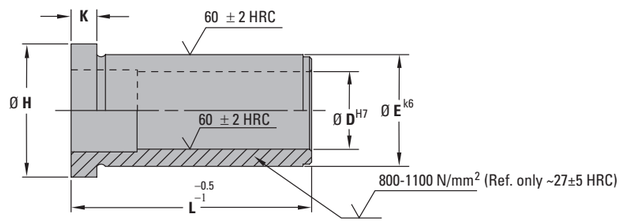

ITEM PREFIX	D	E	H	K	L 009	012	017	022	027	036	046	056	066	076	086	096	116	136	156	246
GDB-ESS (R03)*	09 OR 10	14	16	3																
	14 OR 15	20	25	6					⚡	⚡	⚡	⚡								
	18 OR 20	26	31	6					⚡	⚡	⚡	⚡	⚡		⚡		⚡			
	22 OR 24	30	35	6					⚡	⚡	⚡	⚡	⚡	⚡	⚡	⚡	⚡			
	30 OR 32	42	47	6							⚡				⚡	⚡		⚡		
	40 OR 42	54	60	10																

* "(R03)" is only a cross-reference to current DME Europe Catalog item prefix numbers.

HOW TO ORDER: Specify Item Number with prefix, D diameter, and L length. Include zeros and dashes but omit decimals, as shown.

Prefix - D - L

Example: Prefix D L — GDB-ESS-09-022
Example: Prefix D L — GDB-ESS-32-136

KEY TO CHART
⚡ Items in stock
2-3 week delivery
Contact DME for quote

Self-Lube Guide Pin Bushings (without Collar) – GDB-ESL

Bujes guia autolubricados | Casquilhos auto-lubrificantes | Douilles de Guidage autolubrifiantes sans collerette | Selbstschmierende Führungsbuchsen (ohne Bund)

INFORMATION KEY:
D = Inside Diameter
E = Outside Diameter
H = Head Diameter
K = Head Thickness
L = Bushing Length
Standard: Euro-Series
Material: 2.0975 with Graphite Plugs 200HB
Dimensions: Shown in Millimeters (mm)

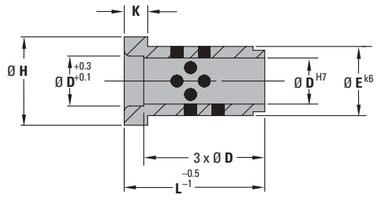

ITEM PREFIX	D	E	H	K	L 017	022	027	036	046	056	066	076	086	096	116	136
GDB-ESL (R03W)*	09 OR 10	14	16	3												
	14 OR 15	20	25	6			⚡	⚡	⚡							
	18 OR 20	26	31	6			⚡	⚡	⚡		⚡					
	22 OR 24	30	35	6			⚡	⚡	⚡		⚡					
	30 OR 32	42	47	6									⚡	⚡		
	40 OR 42	54	60	10												

* "(R03W)" is only a cross-reference to current DME Europe Catalog item prefix numbers.

HOW TO ORDER: Specify Item Number with prefix, D diameter, and L length. Include zeros and dashes but omit decimals, as shown.

Prefix - D - L

Example: Prefix D L — GDB-ESL-10-036
Example: Prefix D L — GDB-ESL-32-096

KEY TO CHART
⚡ Items in stock
2-3 week delivery
Contact DME for quote

MOLD COMPONENTS – METRIC

Centering Bushing – Locating Sleeves

Centering Bushing (Locating Sleeves) – R05

Buje centrador | Casquilho central | Fourrure au centre | Mittelbuchse

INFORMATION KEY:
D = Outside Diameter
F = Inside Diameter
G = Inside Clearance Diameter
L = Length
N = Inside Length
Standard: Euro-Series
Material: 1.7131 (AISI 5115 Type) Steel
Surface Treatment: Case Hardened
Dimensions: Shown in Millimeters (mm)

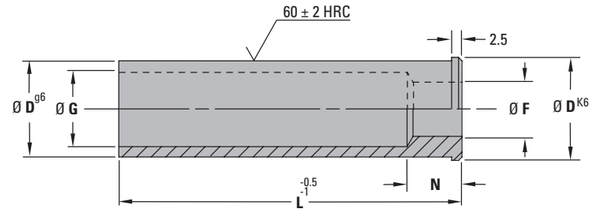

ITEM PREFIX	D	F	G	N	L 020	030	040	050	060	070	080	100	120	140	160	180	200	240	280	300
R05	14	6	11	8																
	20	8	16	13					⚡		⚡	⚡								
	26	10	21	13					⚡		⚡	⚡	⚡	⚡						
	30	12	25	13					⚡		⚡	⚡	⚡	⚡						
	42	16	33	13								⚡	⚡	⚡						
	54	20	43	13																

Tubular Dowels – R09

Registro tubular | Cavilha tubular | Douaires tubulaires | Paßhülsen

INFORMATION KEY:
D = Outside Diameter
G = Inside Diameter
L = Length
Standard: Euro-Series
Material: 1.7131 (AISI 5115 Type) Steel
Surface Treatment: Case Hardened
Dimensions: Shown in Millimeters (mm)

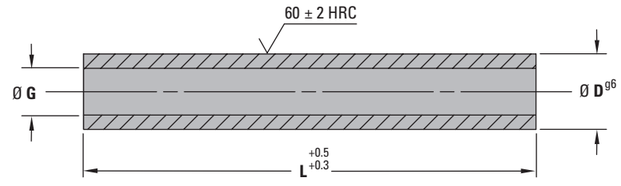

ITEM PREFIX	D	G	L 020	030	040	050	060	070	080	100	120	140	160	180	200	240	300
R09	10	6.2			⚡												
	14	8.5															
	18	10.5					⚡		⚡								
	24	13					⚡		⚡		⚡						
	30	17							⚡		⚡		⚡	⚡			

HOW TO ORDER: Specify Item Number with prefix, D diameter and L length. Include zeros as shown, but omit all spaces (spaces are only shown here for easier reading).

Prefix D L

Example: Prefix D L — R09 10 040
Example: Prefix D L — R09 30 180

KEY TO CHART
⚡ Items in stock
2-3 week delivery
Contact DME for quote

Washer (Disk for Tubular Dowel) – R091

Arandela – Registro tubular | Anilhas – para cavilha tubular | Cachetage cylindrique – Douaires tubulaires | Scheibe – Paßhülsen

INFORMATION KEY:
D = Outside Diameter
G = Inside Diameter
K = Thickness
Standard: Euro-Series
Material: 1.7131 (AISI 5115 Type) Steel
Surface Treatment: Case Hardened
Dimensions: Shown in Millimeters (mm)

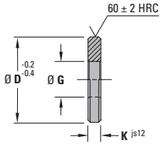

KEY TO CHART
⚡ Items in stock
2-3 week delivery
Contact DME for quote

ITEM NUMBER	D	K	G	AVAILABILITY
R091143	14	003	6.2	⚡
R091184	18	004	8.5	⚡
R091245	24	005	10.5	⚡
R091306	30	006	13.0	⚡
R091408	40	008	17.0	⚡

MOLD COMPONENTS – METRIC

Locating Rings

Locating Ring with Mounting Holes – DHR21

Anillo centrador | Anéis de centragem | Rondelles de placement | Centrierflansche

INFORMATION KEY:
D = Platen-Side Diameter
F = Inside Diameter
G = Mold-Side Diameter
H = Overall Height
T = Mold-Side Step Height
Standard: Euro-Series
Material: 1.1730 Steel
Dimensions: Shown in Millimeters (mm)

ITEM PREFIX	THREAD TYPE	G	F	D	H 12 T 4	H 15 T 7	H 17 T 9	H 19 T 11
DHR21	M6	90	36	080				
	M8	90	36	100				
		90	36	110			⚡	
		90	36	120		⚡	⚡	⚡
		90	36	160				
		90	36	175				

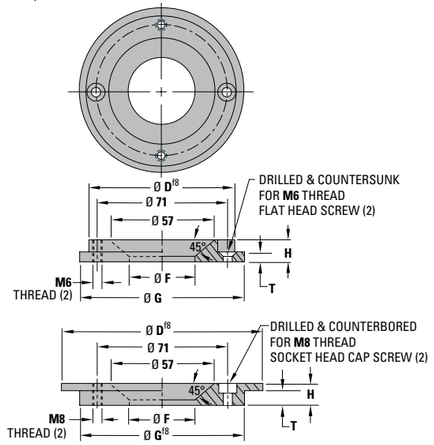

HOW TO ORDER: Specify Item Number with prefix, D diameter, and H height. Include zeros where shown, but omit all spaces (spaces are only shown here for easier reading).

Prefix	D	H
DHR21	⚡	

Example: **Prefix D H** DHR21 060 19

Example: **Prefix D H** DHR21 120 15

KEY TO CHART
⚡ Items in stock
2-3 week delivery
Contact DME for quote

Locating Ring (Solid) – R20

Anillo centrador | Anéis de centragem | Rondelles de placement | Centrierflansche

INFORMATION KEY:
D = Platen-Side Diameter
G = Mold-Side Diameter
H = Overall Height
T = Mold-Side Step Height
Standard: Euro-Series
Material: 1.1730 Steel
Dimensions: Shown in Millimeters (mm)

ITEM PREFIX	G	D	H 8 T 4	H 12 T 4	H 15 T 7	H 17 T 9	H 19 T 11
R20	90	100					
	90	110		⚡		⚡	
	90	120		⚡	⚡	⚡	⚡
	90	125		⚡	⚡	⚡	⚡
	90	160					
	90	175					

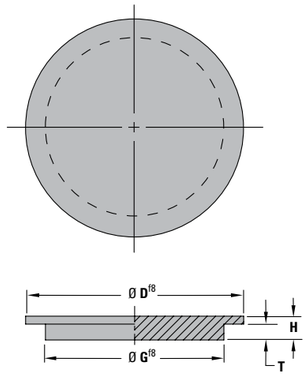

HOW TO ORDER: Specify Item Number with prefix, D diameter, and H height. Include zeros where shown, but omit all spaces (spaces are only shown here for easier reading).

Prefix	D	H
R20	⚡	

Example: **Prefix D H** R20 100 15

Example: **Prefix D H** R20 120 19

KEY TO CHART
⚡ Items in stock
2-3 week delivery
Contact DME for quote

MOLD COMPONENTS – METRIC

Sprue Bushings – Hardened

Boquillas de inyeccion – templadas | Injectores do gito – temperados | Buses d'injection – trempé | Angießbuchsen – gehärtet

INFORMATION KEY:
D = Outside Diameter of Stem
H = Head Diameter
K = Head Thickness
N = Stem Length
O = Sprue Orifice Diameter
Standard: Euro-Series
Material: 1.2826 Steel
Surface Treatment: None (Through Hardened)
Dimensions: Shown in Millimeters (mm)

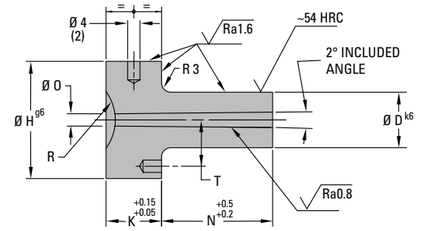

R = No Radius – DHR74

Material: 1.2826 Steel Hardness: ~54 HRC

ITEM PREFIX	D	N 022	N 027	N 036	N 046	N 056	N 076	N 096	N 116	O	H	K	T
DHR74	12	⚡	⚡	⚡	⚡	⚡				2.5	28	13	11
			⚡	⚡	⚡	⚡				3.5			
	18				⚡	⚡	⚡	⚡		3	38	18	15
						⚡	⚡	⚡	⚡	4			

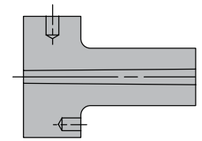

HOW TO ORDER: Specify Item Number with prefix, D diameter, N length, and O diameter. Include zeros and commas only where shown, but omit all spaces (spaces are only shown here for easier reading).

Prefix	D	N	O
DHR74			

Example: **Prefix D N O** DHR74 12 022 2,5

Example: **Prefix D N O** DHR74 18 056 3

KEY TO CHART
⚡ Items in stock
2-3 week delivery
Contact DME for quote

R = 15.5mm Radius – DHR76

Material: 1.2826 Steel **Hardness:** ~54 HRC

ITEM PREFIX	D	N 022	N 027	N 036	N 046	N 056	N 076	N 096	N 116	O	H	K	T
DHR76	12									2,5	28	13	11
				⚡	⚡					3.5			
	18					⚡	⚡	⚡	⚡	3.0	38	18	15
										4.0			

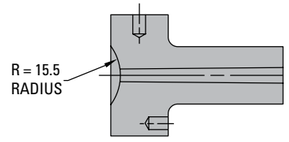

HOW TO ORDER: Specify Item Number with prefix, D diameter, N length, O diameter, and R radius = 15. Include zeros and commas where shown, but omit all spaces (spaces are only shown here for easier reading).

Prefix	D	N	O	R
DHR76				15

Example: **Prefix D N O R** DHR76 12 036 3,5 15

Example: **Prefix D N O R** DHR76 18 056 4,0 15

KEY TO CHART
⚡ Items in stock
2-3 week delivery
Contact DME for quote

R = 40.0mm Radius – DHR78

Material: 1.2826 Steel Hardness: ~54 HRC

ITEM PREFIX	D	N 022	N 027	N 036	N 046	N 056	N 076	N 096	N 116	O	H	K	T
DHR78	12									2.5	28	13	11
			⚡	⚡	⚡	⚡				3.5			
	18				⚡	⚡	⚡	⚡		3.0	38	18	15
						⚡	⚡	⚡	⚡	4.0			

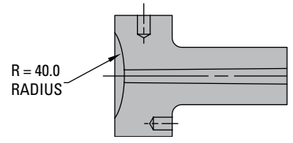

HOW TO ORDER: Specify Item Number with prefix, D diameter, N length, O diameter, and R radius = 40. Include zeros and commas where shown, but omit all spaces (spaces are only shown here for easier reading).

Prefix	D	N	O	R
DHR78				40

Example: **Prefix D N O R** DHR78 12 027 3,5 40

Example: **Prefix D N O R** DHR78 18 056 4,0 40

KEY TO CHART
⚡ Items in stock
2-3 week delivery
Contact DME for quote

MOLD COMPONENTS – METRIC

Support Pillars

LOAD • CARGA • CHARGE
• CARGA • DRUCK

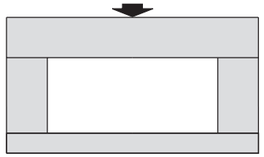

- No support pillars
- Sin pilares de apoyo
- Sans colonnes de support
- Sem colunas de suporte
- Ohne Stutzbolzen

LOAD • CARGA • CHARGE
• CARGA • DRUCK

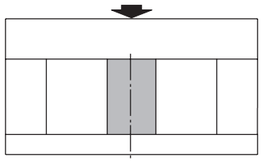

- One row of support pillars increases the permissible cavity area 4 times.
- Una fila de pilares de apoyo aumenta el area permisible de la cavidad cuatro veces.
- Une rangee de colonnes de support augmente la surface d'empreinte admissible de 4 fois.
- Uma fileira de colunas de suporte aumenta em 4 vezes a area de cavidade permitida.
- Eine Reihe Stutzbolzen erhoht die Belastbarkeit der Kavitatflache um das 4-Fache.

LOAD • CARGA • CHARGE
• CARGA • DRUCK

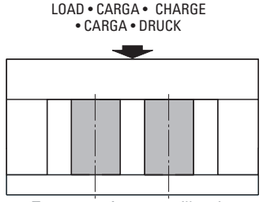

- Two rows of support pillars increase the permissible cavity area 9 times.
- Una fila de pilares de apoyo aumenta el area permisible de la cavidad nueve veces.
- Deux rangees de colonnes de support augmentent la surface d'empreinte admissible de 9 fois.
- Duas fileiras de colunas de suporte aumentam em 9 vezes a area de cavidade permitida.
- Zwei Reihen Stutzbolzen erhohen die Belastbarkeit der Kavitatsflache um das 9-Fache.

Support Pillars with Drilled & Counterbored Hole – FW28

Pilares de apoyo | Suportes | Colonnes de support | Stützbolzen

INFORMATION KEY:
D = Outside Diameter
G = Through Hole Diameter
H = Counterbore Diameter
K = Counterbore Depth
L = Length
Standard: DIN Type
Material: 1.1730 Steel
Surface Treatment: None
Dimensions: Shown in Millimeters (mm)

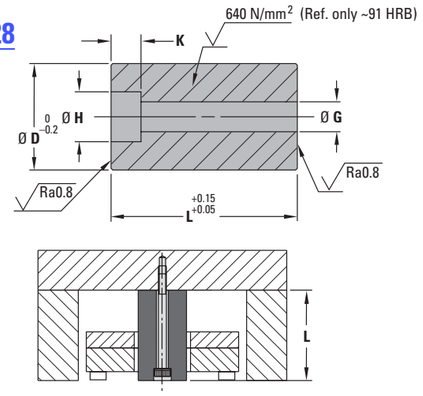

ITEM PREFIX	D	G	H	K	L 046	056	076	096	116	136
FW28	32	9	15	9		⚡	⚡			
	40	11	18	11		⚡	⚡	⚡		
	50	13	20	13			⚡	⚡		
	63	13	20	13				⚡		

KEY TO CHART
⚡ Items in stock
2-3 week delivery
Contact DME for quote

Support Pillars with Tapped Hole and Hole for Dowel – FW29

Pilares de apoyo | Suportes | Colonnes de support | Stützbolzen

INFORMATION KEY:
D = Outside Diameter
F = Tap Diameter
G = Dowel Locating Hole Diameter
L = Length
M = Locating Hole Depth (minimum)
N = Tap Depth (minimum)
Standard: DIN Type
Material: 1.1730 Steel
Surface Treatment: None
Dimensions: Shown in Millimeters (mm)

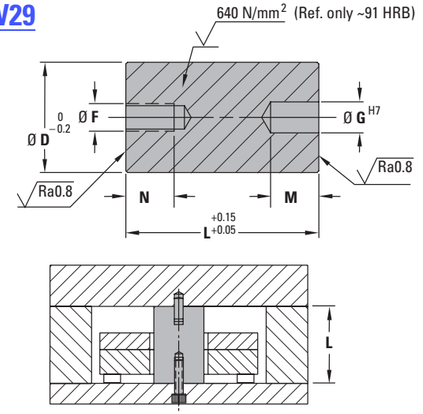

ITEM PREFIX	D	G	M	F	N	L 046	056	076	096	116
FW29	32	8	14	M8	14		⚡	⚡		
	40	10	18	M10	18		⚡	⚡	⚡	
	50	10	18	M10	18			⚡	⚡	
	63	10	18	M10	18				⚡	

KEY TO CHART
⚡ Items in stock
2-3 week delivery
Contact DME for quote

HOW TO ORDER: Specify Item Number with prefix, D diameter and L length. Include zeros as shown, but omit all spaces (spaces are only shown here for easier reading).

Prefix | D | L

Example: Prefix D L FW28 32 076

Example: Prefix D L FW29 63 096

MOLD COMPONENTS – METRIC

Dowel Pins with Internal Thread – Pull Dowels

Dowel Pins – DP

Clavija | Cavilhas | Goupilles cylindriques | Zylinderstifte

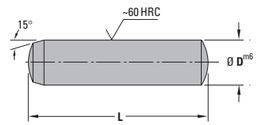

INFORMATION KEY:
D = Pin Outside Diameter
L = Length
Standard: DIN 6325, ISO 8734
Material: Per DIN and ISO Specifications
Dimensions: Shown in Millimeters (mm)

ITEM PREFIX	D	L 6	8	10	12	14	16	18	20	24	28	32	36	40	50	60	80	100	120	140
DP	2		⚡																	
	3			⚡																
	4																			
	5				⚡		⚡		⚡											
	6								⚡	⚡		⚡								
	8								⚡	⚡		⚡		⚡		⚡				
	10									⚡		⚡		⚡		⚡	⚡			
	12											⚡		⚡		⚡	⚡			
	16																			
	20															⚡				

HOW TO ORDER: Specify Item Number with prefix, D diameter and L length. Include zeros as shown, but omit all spaces (spaces are only shown here for easier reading).

Prefix DP | D | L

Example: Prefix D L DP 2 8

Example: Prefix D L DP 20 60

KEY TO CHART
⚡ Items in stock
2-3 week delivery
Contact DME for quote

Dowel Pins with Internal Thread (Pull Dowels) – WZ7005

Clavija con cuerda interna | Cavilhas | Goupilles cylindriques | Zylinderstifte

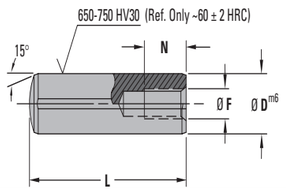

INFORMATION KEY:
D = Pin Outside Diameter
F = Tap Diameter
L = Length
N = Tap Depth
Standard: DIN EN 28735 – Type A
Material: Per DIN Specification
Dimensions: Shown in Millimeters (mm)

ITEM PREFIX	D	F	N	L 020	024	028	032	036	040	050	060	080	100
WZ7005	06	M4	6	⚡			⚡		⚡				
	08	M5	8						⚡	⚡	⚡		
	10	M6	10						⚡		⚡		
	12	M6	12						⚡		⚡		
	14	M8	12										
	16	M8	16										
	20	M10	20										

HOW TO ORDER: Specify Item Number with prefix, D diameter and L length. Include zeros as shown, but omit all spaces (spaces are only shown here for easier reading).

Prefix WZ7005 | D | L

Example: Prefix D L WZ7005 06 020

Example: Prefix D L WZ7005 12 040

KEY TO CHART
⚡ Items in stock
2-3 week delivery
Contact DME for quote

MOLD COMPONENTS – METRIC

Socket Head Cap Screws Lock Washers – Spring Washers

Socket Head Cap Screws – M

INFORMATION KEY:
D = Thread Diameter
H = Head Diameter
K = Head Height
L = Length
N = Thread Length
T = Hex Socket Size (Across Flats)
Standard: DIN 912-12.9
Material: Per DIN Specification
Dimensions: Shown in Millimeters (mm)

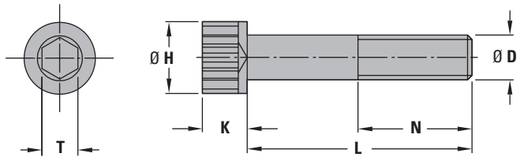

D	N	H	K	T	L																							
					8	10	12	16	20	25	30	40	50	60	70	80	90	100	110	120	130	140	150	160	180	200	220	240	260
M4	12	7	4	3																									
M6	18	10	6	5																									
M8	22	13	8	6																									
M10	25	16	10	8																									
M12	28	18	12	10																									
M16	38	24	16	14																									
M16	44	24	16	14																									
M16	57	21	10	14																									
M20	52	30	20	17																									
M20	65	30	20	17																									

HOW TO ORDER: Specify D diameter and L length. Include zeros as shown, but omit all spaces (spaces are only shown here for easier reading).

D L

Example: D M6 H 30

Example: D M20 H 200

KEY TO CHART
- Items in stock
- 2-3 week delivery
- Contact DME for quote

Lock Washers (Spring Washers) – R54

Rondanas de Presion | Freios | Rondelles de retenue | Sicherungsscheibe (Federscheibe)

INFORMATION KEY:
D = For Screw Diameter
F = Inside Diameter
P = Outside Diameter
T = Thickness
Standard: DIN 7980
Material: Per DIN Specification
Dimensions: Shown in Millimeters (mm)

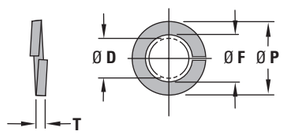

ITEM NUMBER	D	F	P	T	AVAILABILITY
R54 08 2	08	8.1	12.7	2.0	
R54 10 2,5	10	10.2	16	2.5	
R54 12 2,5	12	12.5	18	2.5	

HOW TO ORDER: Specify Item Number. Include zeros and commas but omit decimals and all spaces (spaces are only shown in table above for easier reading).

KEY TO CHART
- Items in stock
- 2-3 week delivery
- Contact DME for quote

DME

MOLD COMPONENTS – METRIC

Flat Head Screws Stop Disk for Ejector Plates

Flat Head Screws – SM

Tornillo de cabeza plana avellanada | Parafusos de cabeça cónica | Vis creuses | Senkkopfschrauben

INFORMATION KEY:
D = Thread Diameter
H = Head Diameter
K = Head Height
L = Length
T = Hex Socket Size (Across Flats)
Standard: DIN 7991-10.9
Material: Per DIN Specification
Dimensions: Shown in Millimeters (mm)

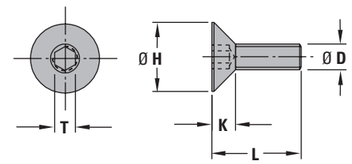

ITEM PREFIX	H	K	T	D	L									
					8	10	12	16	20	25	30	35	40	45	50
SM3	6	2.5	1.7	M3											
SM4	8	3	2.3	M4											
SM5	10	4	2.8	M5											
SM6	12	5	3.3	M6											
SM8	16	6	4.4	M8											
SM10	20	8	5.5	M10											
SM12	24	10	6.5	M12											

HOW TO ORDER: Specify Item Number with prefix and L length. Include zeros as shown, but omit all spaces (spaces are only shown here for easier reading).

Prefix L

Example: Prefix SM3 L 10

Example: Prefix SM8 L 16

KEY TO CHART
- Items in stock
- 2-3 week delivery
- Contact DME for quote

Stop Disk for Ejector Plates – R18

Arandela de Tope | Anilhas de encosto | Repos d'épaisseur pour plaques d'éjection | Distanzscheibe für Auswerferplatte

INFORMATION KEY:
Standard: Euro-Series
Material: 1.1191 (AISI 1045 Type) Steel
Dimensions: Shown in Millimeters (mm)

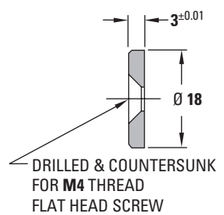

ITEM NUMBER	AVAILABILITY
R18 18	

HOW TO ORDER: Specify Item Number. Omit spaces (spaces are only shown in table above for easier reading).

Use with SM4 8 Flat Head Screw (M4 thread x 8mm long) which must be purchased separately. See Flat Head Screws above.

KEY TO CHART
- Items in stock
- 2-3 week delivery
- Contact DME for quote

DME GATE CUTTERS

A Cut Above The Rest

Selecting the Correct Gate Cutter for Your Application:

To ensure a quality finished product, it is important to choose the proper gate cutter. Consider the following when selecting a cutter...

- Contour of the back of the blade
- Blade length
- Blade opening
- Handle length

The blade characteristics should match the part at the area of de-gating.



Blade Contour

Flat Face:

For general purpose cutting where the sprue is fully accessible or proud of the cutting surface.

Nipper Type (slightly rounded):

For sprue cutting where access to the sprue may be slightly recessed

Angle Heads:

For recessed sprue cutting and access to internal cavities.

Convex/Concave:

For special applications where the sprue is recessed.

Blade Stop

When cutting hard or brittle material it is recommended to use a cutter with a blade stop. Adjusting the stop so the blades stop short of hitting each other will extend the life of the blades.

Handles

How much pressure an operator must exert when cutting a sprue or gate is determined by the length of the cutter handle. A handle that is too long for the operator's hand is difficult to grip while a handle that is too short causes excessive strain. Match the cutter with the operator's hand and the sprue being cut. Ergonomic handles are an effective way to reduce operator fatigue and decrease the risk of carpal tunnel syndrome. Have a left handed operator? We have left handed gate cutters.

Quantity Discounts

Standard Gate Cutters -
12-23 pairs - less 3%
24-74 pairs - less 7%
75-99 pairs - less 10%
100+ pairs - less 13%

Premium & Specialized Gate Cutters -
20-39 pairs - less 3%
40-69 pairs - less 6%
70-99 pairs - less 9%
100+ pairs - less 12%

Visit store.milacron.com and search Gate Cutters for additional details and quick, easy online shopping



DME INCH PINS, SLEEVES, BLADES

FEATURING HIGH-QUALITY EJECTOR PINS, SLEEVES, BLADES, CORE PINS, RETURN PINS, AND SPRUE PULLER PINS

INCH PINS, SLEEVES, BLADES

A comprehensive line of INCH Ejector Products



Ejector Pins

Nitrided, Through-Hardened, Close Tolerance 314-319



Shoulder Ejector Pins

Nitrided, Through-Hardened, Close Tolerance 315



Keyed Ejector Pins.....316, 318



Ejector Sleeves

Thin Wall Sleeves & Sleeve Extensions 320
Nitrided O.D., Nitrided O.D. & I.D. 321-322



Ejector Blades M2 323-324



Core Pins

Standard, High-Hardness, Copper-ased Alloy..... 325-329



Core Pin Retainers 330



Return Pins 331

DuPont™ Krytox® TM7 Grease 331



Sprue Puller Pins..... 332

INCH PINS, SLEEVES, BLADES

A comprehensive line of INCH Ejector Products

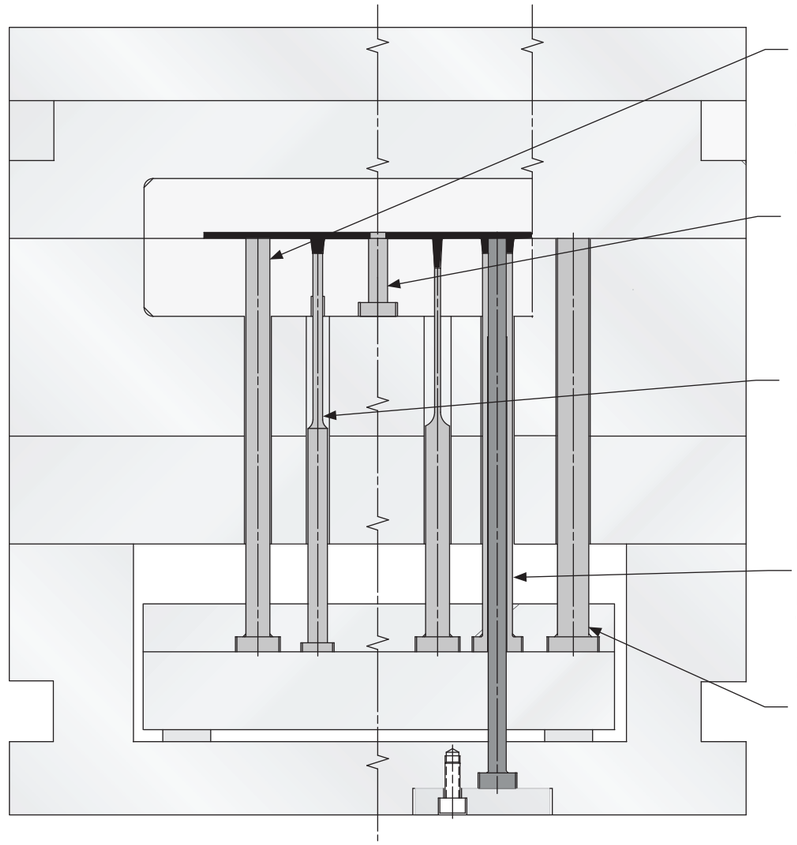

EJECTOR PINS – STRAIGHT
EX INCH EJECTOR PINS – STRAIGHT 314
EXK KEYED EJECTOR PINS.....316
THX INCH THROUGH-HARDENED EJECTOR PINS.....317
THXK KEYED EJECTOR PINS.....318
EJP-IMH CLOSE TOLERANCE M-2 EJECTOR PINS.....319

EJECTOR PINS – SHOULDER
EX INCH EJECTOR PINS – (NITRIDED)
½" SHOULDER 315
2" SHOULDER 315
EJP-IMH CLOSE TOLERANCE M2 EJECTOR PINS 319

EJECTOR SLEEVES
TWS INCH THIN WALL SLEEVES 320
SLEEVE EXTENSIONS 320
S INCH EJECTOR SLEEVES – NITRIDED O.D.....321
SND INCH EJECTOR SLEEVES – NITRIDED O.D. & I.D. 322

EJECTOR BLADES
INCH EJECTOR BLADES..... 323-324

CORE PINS
C INCH CORE PINS – STANDARD HARDNESS.....325
CX INCH CORE PINS – HIGH HARDNESS 326
VORTEX™ PORCERAX™ PINS & PLUGS 327
PCL Copper-Based Alloy CORE PINS –
HIGH CONDUCTIVITY 328-329
CPR INCH CORE PIN RETAINERS.....330

RETURN & SPRUE PULLER PINS
INCH RETURN PINS.....331
INCH SPRUE PULLER PINS.....332

APPENDICES
INCH FAX ORDER FORM 333
COMPARISON CHART.....334
HARDNESS CONVERSION TABLE 335
DME HARDNESS DATA.....335

INCH PINS, SLEEVES, BLADES

INCH Ejector Pins – H13 Nitrided – Straight

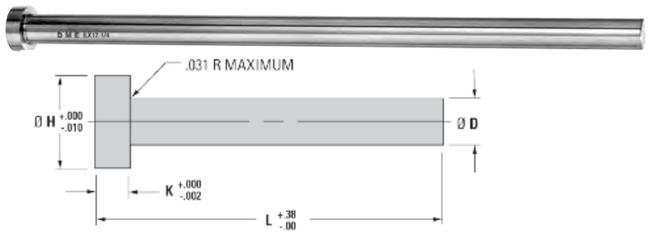

- Precision made of superior quality H13 type thermal shock resisting hotwork die steel
- Hot-forged heads provide uniform grain flow, higher tensile strength
- Core hardness 40-45 HRC
- Outside diameter nitrided to 65-74 HRC hardness and finished to minimize wear
- Heads annealed for easy machining
- Centerless ground D diameter

INCH Ejector Pins – EX

					L = LENGTH												
					6		10		14		18		25	36	39	42	45
													Ø D -.0003				
ITEM NUMBER PREFIX	Ø D PIN DIA	Ø D PIN DIA TOL	Ø H HEAD DIA	K HEAD THK	D STD	D .005 OVER SIZE	D STD	D .005 OVER SIZE	D STD	D .005 OVER SIZE	D STD	D .005 OVER SIZE	PIN DIA TOL -.0008 D STD	D STD	D STD	D STD	D STD
EX3M__*_NS	3/64 (.0468)	-.0003 -.0006	.250	.125	⚡	⚡											
EX5M__*_NS	1/16 (.0625)		.250	.125	⚡	⚡											
EX6M__*_NS	5/64 (.0781)		.250	.125	⚡		⚡	⚡									
EX7M__*_NS	3/32 (.0937)		.250	.125	⚡	⚡	⚡	⚡									
EX8M__*_NS	7/64 (.1093)		.250	.125	⚡		⚡	⚡									
EX9M__*	1/8 (.1250)		.250	.125	⚡	⚡	⚡	⚡	⚡	⚡			⚡				
EX10M__*	9/64 (.1406)		.250	.125			⚡	⚡	⚡								
EX11M__*	5/32 (.1562)		.281	.156	⚡	⚡	⚡	⚡	⚡	⚡	⚡		⚡				
EX12M__*	11/64 (.1718)		.343	.187			⚡	⚡	⚡								
EX13M__*	3/16 (.1875)		.375	.187	⚡	⚡	⚡	⚡	⚡	⚡	⚡	⚡	⚡		⚡		⚡
EX14M__*	13/64 (.2031)		.375	.187			⚡	⚡	⚡								
EX15M__*	7/32 (.2187)		.406	.187	⚡	⚡	⚡	⚡	⚡	⚡			⚡				
EX16M__*	15/64 (.2343)		.406	.187			⚡	⚡	⚡								
EX17M__*	1/4 (.2500)		.437	.187	⚡	⚡	⚡	⚡	⚡	⚡	⚡	⚡	⚡	⚡	⚡		⚡
EX18M__*	17/64 (.2656)		.437	.250			⚡	⚡	⚡				⚡				
EX19M__*	9/32 (.2812)		.437	.250	⚡	⚡	⚡	⚡	⚡	⚡	⚡		⚡				
EX20M__*	19/64 (.2968)	-.0003	.500	.250			⚡	⚡	⚡								
EX21M__*	5/16 (.3125)	-.0006	.500	.250	⚡	⚡	⚡	⚡	⚡	⚡	⚡	⚡	⚡	⚡	⚡		⚡
EX22M__*	21/64 (.3281)		.562	.250			⚡	⚡	⚡				⚡				
EX23M__*	11/32 (.3437)		.562	.250	⚡		⚡	⚡	⚡	⚡			⚡				
EX24M__*	23/64 (.3593)		.625	.250			⚡	⚡	⚡								
EX25M__*	3/8 (.3750)		.625	.250	⚡	⚡	⚡	⚡	⚡	⚡	⚡	⚡	⚡	⚡	⚡		⚡
EX26M__*	25/64 (.3906)		.625	.250			⚡	⚡									
EX27M__*	13/32 (.4062)		.687	.250	⚡		⚡	⚡	⚡	⚡	⚡		⚡				
EX28M__*	27/64 (.4218)		.687	.250			⚡	⚡									
EX29M__*	7/16 (.4375)		.687	.250	⚡	⚡	⚡	⚡	⚡	⚡	⚡		⚡	⚡			
EX30M__*	29/64 (.4531)		.687	.250			⚡	⚡									
EX31M__*	15/32 (.4687)		.750	.250	⚡		⚡	⚡	⚡		⚡		⚡				
EX32M__*	31/64 (.4843)		.750	.250			⚡	⚡	⚡								
EX33M__*	1/2 (.5000)		.750	.250	⚡		⚡	⚡	⚡	⚡	⚡		⚡	⚡	⚡	⚡	⚡
EX34M__*	17/32 (.5312)		.750	.250	⚡		⚡		⚡								
EX35M__*	9/16 (.5625)		.812	.250	⚡		⚡		⚡		⚡		⚡				
EX37M__*	5/8 (.6250)	-.0003	.875	.250	⚡		⚡		⚡		⚡		⚡	⚡	⚡		⚡
EX39M__*	11/16 (.6875)	-.0008	.937	.250	⚡		⚡		⚡		⚡		⚡				
EX41M__*	3/4 (.7500)		1.000	.250	⚡		⚡		⚡		⚡		⚡	⚡	⚡	⚡	⚡
EX45M__*	7/8 (.8750)		1.125	.250	⚡		⚡		⚡		⚡		⚡				
EX47M__*	1" (1.0000)		1.250	.250	⚡		⚡		⚡		⚡		⚡	⚡	⚡	⚡	⚡

***HOW TO ORDER: Specify Item Number by combining Item Number Prefix with the length (L dimension) desired.**
- **Omit spaces and dashes, as shown.** Examples: EX9M10, EX33M10
- **Add "OS" at end of Item Number for .005" oversize diameters.** Examples: EX3M6NSOS, EX25M140S, EX33M100S

NOTE: NS suffix shown in chart for No Shoulder for items EX3M through EX8M. Examples: EX3M6NS, EX7M10NS

KEY TO CHART
⚡ Items in stock
Contact DME for quote

INCH PINS, SLEEVES, BLADES

INCH Ejector Pins – H13 Nitrided – Shoulder

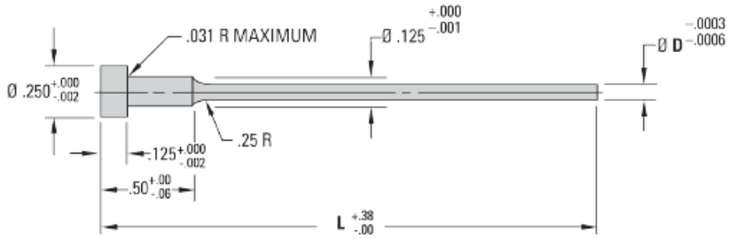

- Precision made of superior quality H13 type thermal shock resisting hotwork die steel
- Hot-forged heads provide uniform grain flow, higher tensile strength
- Core hardness 40-45 HRC
- Outside diameter nitrided to 65-74 HRC hardness and finished to minimize wear
- Heads annealed for easy machining
- Centerless ground D diameter

1/2" Shoulder Length – EX

		L = LENGTH					
		6		10		14	
ITEM NUMBER PREFIX	Ø D PIN DIA	D STD	D .005 OVER SIZE	D STD	D .005 OVER SIZE	D STD	
EX2M__*__12SH	1/32 (.0312)	⚡	⚡				
EX3M__*__12SH	3/64 (.0468)	⚡		⚡	⚡	⚡	
EX5M__*__12SH	1/16 (.0625)	⚡		⚡	⚡	⚡	
EX6M__*__12SH	5/64 (.0781)	⚡		⚡	⚡	⚡	
EX7M__*__12SH	3/32 (.0937)	⚡		⚡	⚡	⚡	
EX8M__*__12SH	7/64 (.1093)	⚡		⚡	⚡	⚡	

***HOW TO ORDER: Specify Item Number by combining Item Number Prefix and the length (L dimension) desired.**
Omit spaces and dashes, as shown.
Add "OS" for .005" oversize diameters.

KEY TO CHART
⚡ Items in stock
Contact DME for quote

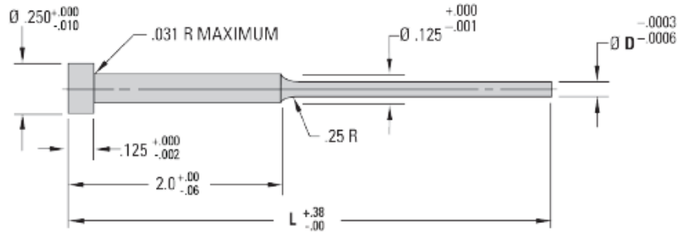

2" Shoulder Length – EX

		L = LENGTH				
		6		10		14
ITEM NUMBER PREFIX	Ø D PIN DIA	D STD	D .005 OVER SIZE	D STD	D .005 OVER SIZE	D STD
EX2M__*	1/32 (.0312)	⚡	⚡			
EX3M__*	3/64 (.0468)	⚡		⚡	⚡	⚡
EX5M__*	1/16 (.0625)	⚡		⚡	⚡	⚡
EX6M__*	5/64 (.0781)	⚡		⚡	⚡	⚡
EX7M__*	3/32 (.0937)	⚡		⚡	⚡	⚡
EX8M__*	7/64 (.1093)	⚡		⚡	⚡	⚡

NOTE: For 2" Shoulder Length, no suffix should be used (see example below).

***HOW TO ORDER: Specify Item Number by combining Item Number Prefix and the length (L dimension) desired.**
Omit spaces and dashes, as shown. Examples: EX2M6, EX8M14
Add "OS" for .005" oversize diameters. Examples: EX2M6OS, EX5M100S, EX8M100S
NOTE: For 2" Shoulder, no suffix is used. Examples: EX3M6, EX7M10

KEY TO CHART
⚡ Items in stock
Contact DME for quote

INCH PINS, SLEEVES, BLADES

Keyed EX Ejector Pins



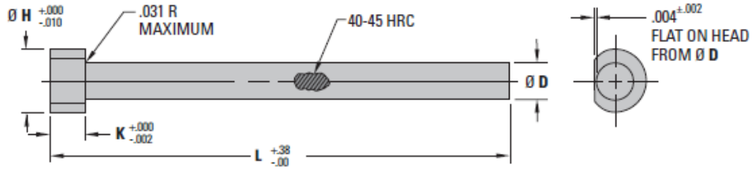

- Precision-machined flat on head keeps pin from rotating
- Made from superior quality thermal shock-resisting hotwork steel
- Hot-forged heads provide uniform grain flow, higher tensile strength
- Core hardness 40-45 HRC
- Outside diameter nitrided to 65-74 HRC (.001-.007 case depth)
- Heads annealed for easy machining
- Centerless ground D diameter

INFORMATION KEY:

D = Pin Diameter
H = Head Diameter
K = Head Thickness
L = Length
Material: H-13 / 1.2344 / SKD61
Surface Treatment: Nitrided
Surface Hardness: 65-74 HRC
Core Hardness: 40-45 HRC

KEY TO CHART

⚡ Items in stock

Contact DME for quote

Keyed Ejector Pins – EXK

ITEM NUMBER PREFIX	Ø D PIN DIA	Ø D PIN DIA TOL	Ø H HEAD DIA	K HEAD THK	L = LENGTH 6 D STD	10 D STD	14 D STD	18 D STD	25 D STD	36 D STD	39 D STD	42 D STD	45 D STD
									Ø D PIN DIA TOL			-.0003 -.0008	
EXK9M__*	1/8 (.1250)	-.0003 -.0006	.250	.125	⚡	⚡	⚡						
EXK10M__*	9/64 (.1406)		.250	.125		⚡	⚡						
EXK11M__*	5/32 (.1562)		.281	.156	⚡	⚡	⚡	⚡	⚡				
EXK13M__*	3/16 (.1875)		.375	.187	⚡	⚡	⚡	⚡	⚡		⚡		
EXK15M__*	7/32 (.2187)		.406	.187	⚡	⚡	⚡		⚡				
EXK17M__*	1/4 (.2500)		.437	.187	⚡	⚡	⚡	⚡	⚡	⚡	⚡		
EXK21M__*	5/16 (.3125)		.500	.250	⚡	⚡	⚡	⚡	⚡	⚡	⚡		
EXK25M__*	3/8 (.3750)		.625	.250	⚡	⚡	⚡	⚡	⚡	⚡	⚡		
EXK29M__*	7/16 (.4375)		.687	.250	⚡	⚡	⚡	⚡	⚡	⚡			
EXK33M__*	1/2 (.5000)	-.0003 -.0008	.750	.250	⚡	⚡	⚡	⚡	⚡	⚡	⚡	⚡	⚡
EXK37M__*	5/8 (.6250)		.875	.250	⚡	⚡	⚡	⚡	⚡	⚡	⚡		
EXK41M__*	3/4 (.7500)		1.000	.250	⚡	⚡	⚡	⚡	⚡	⚡	⚡	⚡	⚡
EXK47M__*	1" (1.0000)		1.250	.250	⚡	⚡	⚡	⚡	⚡	⚡	⚡	⚡	⚡

DME

INCH PINS, SLEEVES, BLADES

INCH High-Hardness Ejector Pins – H13 Nitrided – Straight

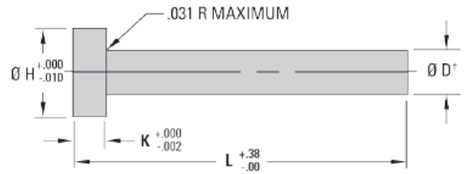

- Higher core hardness makes the THX pins ideal for use in die cast dies or other high temperature applications
- Core hardness of 50-55 HRC minimizes nicking, dishing and bending
- Non-chipping surface treatment of 65-74 HRC alleviates flashing
- Annealed and finished heads permit easy machining
- Centerless ground D diameter
- Final finish minimizes wear and prolongs pin life

INCH High-Hardness Ejector Pins – THX

ITEM NUMBER PREFIX	Ø D PIN DIA		D† PIN DIA TOLERANCES	H HEAD DIA	K HEAD THICK	L = LENGTH 06 D STD	06 D .005 OVER SIZE	10 D STD	10 D .005 OVER SIZE	14 D STD	14 D .005 OVER SIZE	18 D STD
THX03__*__NS	3/64	(.0468)		.250	.125	⚡	⚡					
THX05__*__NS	1/16	(.0625)		.250	.125	⚡	⚡					
THX06__*__NS	5/64	(.0781)		.250	.125	⚡		⚡	⚡			
THX07__*__NS	3/32	(.0937)		.250	.125	⚡	⚡	⚡	⚡			
THX08__*__NS	7/64	(.1093)		.250	.125	⚡		⚡	⚡			
THX09__*	1/8	(.1250)		.250	.125	⚡	⚡	⚡	⚡	⚡	⚡	
THX10__*	9/64	(.1406)		.250	.125			⚡	⚡	⚡		
THX11__*	5/32	(.1562)		.281	.156	⚡	⚡	⚡	⚡	⚡	⚡	
THX12__*	11/64	(.1718)		.343	.187			⚡	⚡	⚡		
THX13__*	3/16	(.1875)		.375	.187	⚡	⚡	⚡	⚡	⚡	⚡	
THX14__*	13/64	(.2031)		.375	.187			⚡	⚡	⚡		
THX15__*	7/32	(.2187)		.406	.187	⚡	⚡	⚡	⚡	⚡	⚡	
THX16__*	15/64	(.2343)		.406	.187			⚡	⚡	⚡		
THX17__*	1/4	(.2500)		.437	.187	⚡	⚡	⚡	⚡	⚡	⚡	⚡
THX18__*	17/64	(.2656)		.437	.250			⚡	⚡	⚡		
THX19__*	9/32	(.2812)		.437	.250	⚡	⚡	⚡	⚡	⚡	⚡	
THX20__*	19/64	(.2968)	–.0003 –.0006	.500	.250			⚡	⚡	⚡		
THX21__*	5/16	(.3125)	*EXCEPTION-*	.500	.250	⚡	⚡	⚡	⚡	⚡	⚡	⚡
THX22__*	21/64	(.3281)	PINS 25″ LONG	.562	.250			⚡	⚡	⚡		
THX23__*	11/32	(.3437)	ARE	.562	.250	⚡		⚡	⚡	⚡	⚡	
THX24__*	23/64	(.3593)	–.0003 –.0008	.625	.250			⚡	⚡	⚡		
THX25__*	3/8	(.3750)		.625	.250	⚡	⚡	⚡	⚡	⚡	⚡	⚡
THX26__*	25/64	(.3906)		.625	.250			⚡	⚡			
THX27__*	13/32	(.4062)		.687	.250	⚡		⚡	⚡	⚡	⚡	
THX28__*	27/64	(.4218)		.687	.250			⚡	⚡			
THX29__*	7/16	(.4375)		.687	.250	⚡	⚡	⚡	⚡	⚡	⚡	
THX30__*	29/64	(.4531)		.687	.250			⚡	⚡			
THX31__*	15/32	(.4687)		.750	.250	⚡		⚡		⚡		
THX32__*	31/64	(.4843)		.750	.250			⚡	⚡	⚡		
THX33__*	1/2	(.5000)		.750	.250	⚡		⚡	⚡	⚡	⚡	⚡
THX34__*	17/32	(.5312)		.750	.250	⚡		⚡		⚡		
THX35__*	9/16	(.5625)		.812	.250	⚡		⚡		⚡		
THX37__*	5/8	(.6250)		.875	.250	⚡		⚡		⚡		⚡
THX39__*	11/16	(.6875)		.937	.250	⚡		⚡		⚡		
THX41__*	3/4	(.7500)		1.000	.250	⚡		⚡		⚡		⚡
THX45__*	7/8	(.8750)		1.125	.250	⚡		⚡		⚡		
THX47__*	1"	(1.0000)		1.250	.250	⚡		⚡		⚡		⚡

***HOW to order: Specify Item Number by combining Item Number Prefix and the length (L dimension) desired.**
- **Omit spaces & dashes, as shown.** Examples: THX0910, THX4118
- **Precede 6″ length with a zero.** Examples: THX0906, THX3306
- **Add "OS" for .005" oversize diameters.** Examples: THX0306NSOS, THX0906OS, THX2514OS, THX3310OS

NOTE: NS suffix shown in chart for No Shoulder for items THX03 through THX08. Examples: THX306NS, THX710NS

KEY TO CHART

⚡ Items in stock

Contact DME for quote

INCH PINS, SLEEVES, BLADES

Keyed THXK Ejector Pins



- Precision-machined flat on head keeps pin from rotating
- Made from superior quality thermal shock-resisting hotwork steel
- Core hardness of 50-55 HRC makes these pins ideal for use in die-cast dies or other high temperature applications
- Annealed hot-forged heads provide uniform grain flow while allowing for easier machining

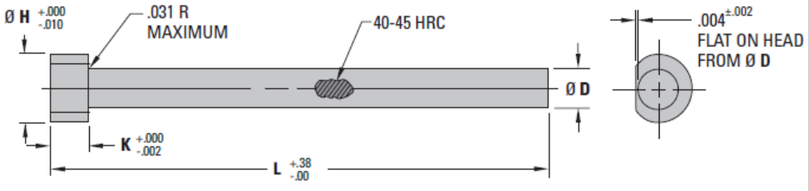

INFORMATION KEY:

D = Pin Diameter
H = Head Diameter
K = Head Thickness
L = Length
Material: H-13 / 1.2344 / SKD61
Surface Treatment: Nitrided
Surface Hardness: 65-74 HRC
Core Hardness: 50-55 HRC

Keyed Ejector Pins – THXK

ITEM NUMBER PREFIX	Ø D PIN DIA		D† PIN DIA TOLERANCES	H HEAD DIA	K HEAD THICK	L = LENGTH						
						4	6	8	10	12	14	25
THXK07_*_	3/32	(.0937)	–.0003 –.0006 *EXCEPTION-* PINS 25" LONG ARE –.0003 –.0008	.250	.125	⚡	⚡		⚡			
THXK09_*_	1/8	(.1250)		.250	.125		⚡		⚡	⚡	⚡	
THXK10_*_	9/64	(.1406)		.250	.125		⚡		⚡		⚡	
THXK11_*_	5/32	(.1562)		.281	.156		⚡	⚡	⚡		⚡	
THXK13_*_	3/16	(.1875)		.375	.187		⚡	⚡	⚡	⚡	⚡	
THXK15_*_	7/32	(.2187)		.406	.187		⚡	⚡	⚡		⚡	
THXK17_*_	1/4	(.2500)		.437	.187	⚡	⚡	⚡	⚡		⚡	
THXK19_*_	9/32	(.2812)		.437	.250		⚡		⚡		⚡	
THXK21_*_	5/16	(.3125)		.500	.250	⚡	⚡		⚡	⚡	⚡	
THXK23_*_	11/32	(.3437)		.562	.250				⚡			
THXK25_*_	3/8	(.3750)		.625	.250		⚡	⚡	⚡	⚡	⚡	⚡
THXK27___	13/32	(.4062)		.687	.250	⚡	⚡		⚡			
THXK29_*_	7/16	(.4375)		.687	.250		⚡		⚡		⚡	
THXK33_*_	1/2	(.5000)		.750	.250	⚡	⚡	⚡	⚡	⚡	⚡	
THXK35_*_	9/16	(.5625)		.812	.250		⚡		⚡	⚡	⚡	
THXK37_*_	5/8	(.6250)		.875	.250	⚡	⚡		⚡		⚡	
THXK41_*_	3/4	(.7500)		1.000	.250		⚡		⚡		⚡	⚡
THX45_*_	7/8	(.8750)		1.125	.250		⚡	⚡				
THXK47_*_	1"	(1.0000)		1.250	.250		⚡		⚡	⚡	⚡	⚡

KEY TO CHART

⚡ Items in stock
Contact DME for quote

INCH PINS, SLEEVES, BLADES

INCH Close Tolerance M-2 Through-Hardened Ejector Pins

INFORMATION KEY:

D = Pin Body Diameter
H = Head Diameter
K = Head Thickness
L = Length
S = Shoulder Length
Tolerance on Ø D: -.0003/-.0005
Material: M2 / 1.3343 / SKH51
Heat Treat: Hardened 58-62 HRC
Surface Treatment: None (Through-Hard)

- **Industry-Leading .0002" Tolerance Band**
- Centerless ground D diameter
- Precision made of superior quality M-2 high-speed tool steel
- Superior wear resistance
- Exceptional performance at elevated temperatures
- Hot-forged heads provide uniform grain flow, higher tensile strength



Straight Ejector Pins – EJP-IMH

ITEM NUMBER PREFIX (WITH DIAMETER)	Ø D PIN BODY DIAMETER	Ø H HEAD DIAMETER	K HEAD THICKNESS	L = 06 LENGTH (INCHES)	L = 10 LENGTH (INCHES)
EJP-IMH-0062-_*_	1/16 (0.0625)	.250	.125	⚡	
EJP-IMH-0093-_*_	3/32 (0.0937)	.250	.125	⚡	
EJP-IMH-0125-_*_	1/8 (0.1250)	.250	.125	⚡	⚡
EJP-IMH-0187-_*_	3/16 (0.1875)	.375	.187		⚡
EJP-IMH-0250-_*_	1/4 (0.2500)	.437	.187	⚡	⚡

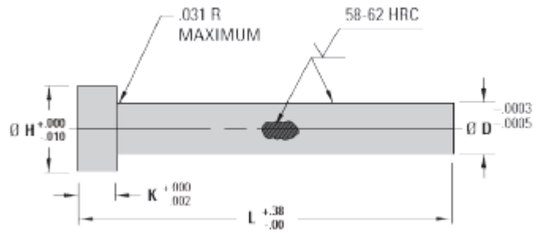

***HOW TO ORDER: Specify Item Number by adding L length in inches (06 or 10) after Item Number Prefix.**
• Include zeros and dashes, as shown. Examples: EJP-IMH-0062-06; EJP-IMH-0125-10; EJP-IMH-0250-10

KEY TO CHART

⚡ Items in stock
Contact DME for quote



2" Shoulder Ejector Pins – EJP-IMH

ITEM NUMBER (WITH DIAMETER, LENGTH & SHOULDER LENGTH)	Ø D PIN BODY DIAMETER	L = 06 LENGTH (INCHES)	S SHOULDER LENGTH
EJP-IMH-0062-06-200	1/16 (0.0625)	⚡	2.00
EJP-IMH-0078-06-200	5/64 (0.0781)	⚡	2.00
EJP-IMH-0093-06-200	3/32 (0.0937)	⚡	2.00

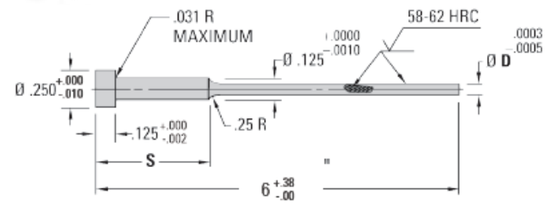

***HOW TO ORDER: Specify Item Number including zeros and dashes, as shown.**
Examples: EJP-IMH-0062-06-200; EJP-IMH-0093-06-200

All dimensions are specified in inches.

KEY TO CHART

⚡ Items in stock
Contact DME for quote

INCH PINS, SLEEVES, BLADES

Thin Wall Ejector Sleeves and Sleeve Extensions

Thin Wall Sleeves

DME Standard Thin Wall Sleeves reduce cost by replacing the need to buy expensive custom ejector sleeves or to machine steps in standard sleeves.

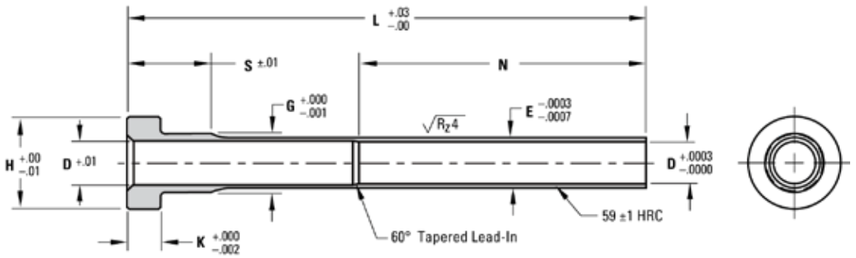

ITEM NUMBER 4"	ITEM NUMBER 6"	Ø D I.D.		E OD	G	S SHOULDER LENGTH	H HEAD DIA	K HEAD THICK.	N BEARING LENGTH
TWS13M4	TWS13M6	3/32	(.0937)	.1563	.188	.500	.375	.187	1.75
TWS15M4	TWS15M6	1/8	(.1250)	.1875	.219		.406		
TWS17M4	TWS17M6	5/32	(.1562)	.2187	.250		.437		2.50
TWS21M4	TWS21M6	3/16	(.1875)	.2500	.312	.625	.500	.250	
TWS23M4	TWS23M6	7/32	(.2187)	.2813	.344		.562		
TWS25M4	TWS25M6	1/4	(.2500)	.3125	.375		.625		
TWS29M4	TWS29M6	5/16	(.3125)	.3750	.438		.687		
TWS33M4	TWS33M6	3/8	(.3750)	.4375	.500		.750		

Electroless nickel coated .0003"– .0007" thick A2 58-60 HRC.
To achieve longer lengths, use Sleeve Extensions.

Sleeve Extensions

Compatible with all industry-standard sleeves. DME Sleeve Extensions.

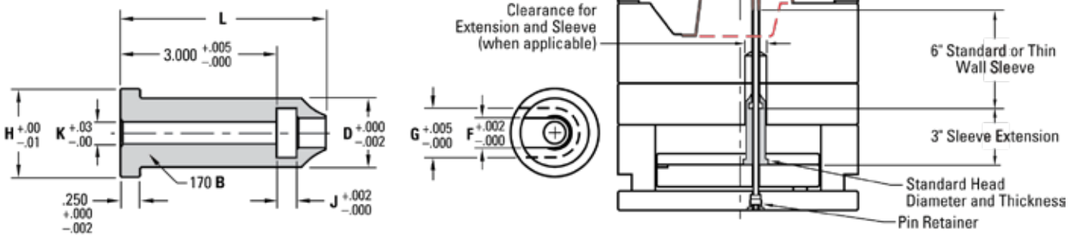

sold on page 298

ITEM NUMBER	NOMINAL SLEEVE I.D.		Ø D O.D.	Ø F	G	K	J	H HEAD DIA.	L REF
SSE13M3	3/32	(.0937)	.625	.193	.385	.17	.188	.875	3.500
SSE15M3	1/8	(.1250)	.625	.224	.416	.17	.188	.875	3.500
SSE17M3	5/32	(.1562)	.625	.255	.448	.17	.188	.875	3.500
SSE21M3	3/16	(.1875)	.875	.318	.520	.28	.251	1.125	3.625
SSE23M3	7/32	(.2187)	.875	.349	.570	.28	.251	1.125	3.625
SSE25M3	1/4	(.2500)	.875	.380	.630	.28	.251	1.125	3.625
SSE29M3	5/16	(.3125)	1.000	.443	.698	.39	.251	1.250	3.625
SSE33M3	3/8	(.3750)	1.000	.505	.760	.39	.251	1.250	3.625

AISI 1215 (170 Brinell)
Black oxide

US Patent No. 6,872,069

INCH PINS, SLEEVES, BLADES

INCH Ejector Sleeves – Nitrided O.D.

Ejector sleeve applications

Fig. A shows a typical Ejector Sleeve application for plastics molding or die casting where the sleeve is used to eject the piece part.

Fig. B shows an application where the sleeve serves as a bushing for the ejector pin. This allows replacement without machining if wear occurs. This practice is also desirable where the ejector pin is located between cavity inserts. Using a sleeve as a bushing provides a full bearing diameter for the pin.

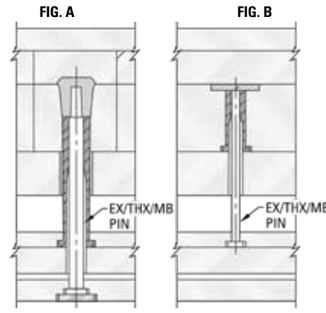

- Precision made of superior quality thermal shock resisting hotwork die steel
- Hot-forged heads provide uniform grain flow, higher tensile strength
- Outside diameter nitrided to 65-74 HRC hardness and finished to minimize wear
- Centerless ground and polished outer diameter
- Inside bearing diameter is 30-35 HRC hardness and finished honed
- Lead-in taper designed to allow interference-free entry of the ejector pin into the sleeve



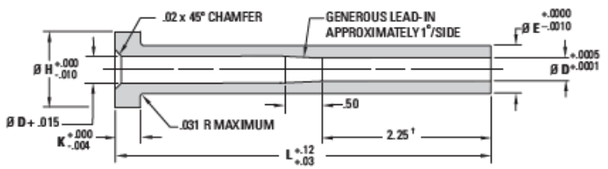

INCH Ejector Sleeves – S

ITEM NUMBER PREFIX	Ø D I.D.		Ø E O.D.		Ø H HEAD DIA	K HEAD THICK	L = LENGTH 3	4	5	6	7	8	9	10	11	12	14
†S13M_*_	3/32	(.0937)	3/16	(.1875)	.375	.187	⚡	⚡	⚡	⚡	⚡						
†S13M_*_OS	3/32	(.0937)	0.1925		.375	.187											
†S15M_*_	1/8	(.1250)	7/32	(.2187)	.406	.187	⚡	⚡	⚡	⚡	⚡						
†S15M_*_OS	1/8	(.1250)	0.2237		.406	.187											
S17M_*_	5/32	(.1562)	1/4	(.2500)	.437	.187		⚡	⚡	⚡	⚡	⚡	⚡	⚡			
S17M_*_OS	5/32	(.1562)	0.2550		.437	.187		⚡									
S21M_*_	3/16	(.1875)	5/16	(.3125)	.500	.250		⚡	⚡	⚡	⚡	⚡	⚡	⚡	⚡	⚡	⚡
S21M_*_OS	3/16	(.1875)	0.3175		.500	.250											
S23M_*_	7/32	(.2187)	11/32	(.3437)	.562	.250		⚡	⚡	⚡	⚡	⚡	⚡	⚡			⚡
S23M_*_OS	7/32	(.2187)	0.3487		.562	.250											
S25_*_	1/4	(.2500)	3/8	(.3750)	.625	.250		⚡	⚡	⚡	⚡	⚡	⚡	⚡	⚡	⚡	⚡
S25M_*_OS	1/4	(.2500)	0.3800		.625	.250		⚡									
S29M_*_	5/16	(.3125)	7/16	(.4375)	.687	.250		⚡	⚡	⚡	⚡	⚡	⚡	⚡	⚡	⚡	⚡
S29M_*_OS	5/16	(.3125)	0.4425		.687	.250											
S33M_*_	3/8	(.3750)	1/2	(.5000)	.750	.250		⚡	⚡	⚡	⚡	⚡	⚡	⚡	⚡	⚡	⚡
S33M_*_OS	3/8	(.3750)	0.5050		.750	.250											
S37M_*_	7/16	(.4375)	5/8	(.6250)	.875	.250		⚡	⚡	⚡	⚡	⚡	⚡	⚡	⚡	⚡	⚡
S37M_*_OS	7/16	(.4375)	0.6300		.875	.250											
S39M_*_	1/2	(.5000)	11/16	(.6875)	.937	.250		⚡	⚡	⚡	⚡	⚡	⚡	⚡	⚡	⚡	⚡
S39M_*_OS	1/2	(.5000)	0.6925		.937	.250											
S41M_*_	9/16	(.5625)	3/4	(.7500)	1.000	.250		⚡	⚡	⚡	⚡	⚡	⚡	⚡	⚡	⚡	⚡
S41M_*_OS	9/16	(.5625)	0.7550		1.000	.250											
S45M_*_	5/8	(.6250)	7/8	(.8750)	1.125	.250		⚡	⚡	⚡	⚡	⚡	⚡	⚡	⚡	⚡	⚡
S45M_*_OS	5/8	(.6250)	0.8800		1.125	.250											
S47M_*_	3/4	(.7500)	1	(1.0000)	1.250	.250		⚡	⚡	⚡	⚡	⚡	⚡	⚡	⚡	⚡	⚡
S47M_*_OS	3/4	(.7500)	1.0050		1.250	.250											

†SND13 and SND15 have a 1.75 bearing length. All sleeves are for use with DME INCH Ejector Pins.

***HOW TO ORDER: Combine Item Prefix and the length (L dimension) desired.**
Examples: S15M6, S39M10

KEY TO CHART
⚡ In stock
Non-stocked - Call for lead time
Special Order

INCH PINS, SLEEVES, BLADES

INCH Ejector Sleeves – Nitrided O.D. & I.D.

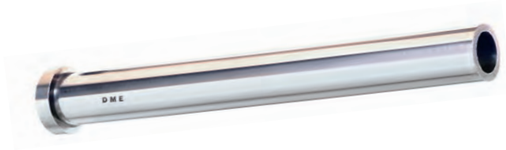

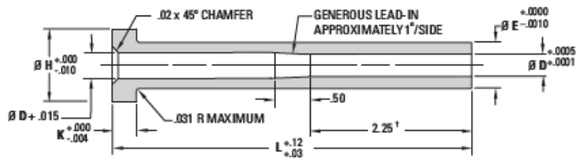

- Precision made of superior quality thermal shock resisting hotwork die steel
- Hot-forged heads provide uniform grain flow, higher tensile strength
- Outside diameter nitrided to 65-74 HRC hardness and finished to minimize wear
- Centerless ground and polished outer diameter
- Inside bearing diameter is nitrided to 65-74 HRC hardness and finished honed
- Lead-in taper designed to allow interference-free entry of the ejector pin into the sleeve
- SND sleeve I.D. is nitrided for prolonged wear resistance and improved lubricity

INCH Ejector Sleeves – SND

ITEM NUMBER PREFIX	Ø D I.D.		Ø E O.D.		Ø H HEAD DIA	K HEAD THICK	L = LENGTH											
							3	4	5	6	7	8	9	10	11	12	13	14
†SND13_*__	3/32	(.0937)	3/16	(.1875)	.375	.187	⚡	⚡	⚡	⚡	⚡	⚡	⚡	⚡	⚡			
†SND13_*__OS	3/32	(.937)	0.1925		.375	.187												
†SND15_*__	1/8	(.1250)	7/32	(.2187)	.406	.187	⚡	⚡	⚡	⚡	⚡	⚡	⚡	⚡	⚡	⚡	⚡	⚡
†SND15_*__OS	1/8	(.1250)	0.2237		.406	.187												
SND17_*__	5/32	(.1562)	1/4	(.2500)	.437	.187		⚡	⚡	⚡	⚡	⚡	⚡	⚡	⚡	⚡	⚡	⚡
SND17_*__OS	5/32	(.1562)	0.2550		.437	.187		⚡										
SND21_*__	3/16	(.1875)	5/16	(.3125)	.500	.250		⚡	⚡	⚡	⚡	⚡	⚡	⚡	⚡	⚡	⚡	⚡
SND21_*__OS	3/16	(.1875)	0.3175		.500	.250												
SND23_*__	7/32	(.2187)	11/32	(.3437)	.562	.250		⚡	⚡	⚡	⚡	⚡	⚡	⚡	⚡	⚡	⚡	⚡
SND23_*__OS	7/32	(.2187)	0.3487		.562	.250												
SND25_*__	1/4	(.2500)	3/8	(.3750)	.625	.250		⚡	⚡	⚡	⚡	⚡	⚡	⚡	⚡	⚡	⚡	⚡
SND25_*__OS	1/4	(.2500)	0.3800		.625	.250		⚡										
SND29_*__	5/16	(.3125)	7/16	(.4375)	.687	.250		⚡	⚡	⚡	⚡	⚡	⚡	⚡	⚡	⚡	⚡	⚡
SND29_*__OS	5/16	(.3125)	0.4425		.687	.250												
SND33_*__	3/8	(.3750)	1/2	(.5000)	.750	.250		⚡	⚡	⚡	⚡	⚡	⚡	⚡	⚡	⚡	⚡	⚡
SND33_*__OS	3/8	(.3750)	0.5050		.750	.250												
SND37_*__	7/16	(.4375)	5/8	(.6250)	.875	.250		⚡	⚡	⚡	⚡	⚡	⚡	⚡	⚡	⚡	⚡	⚡
SND37_*__OS	7/16	(.4375)	0.6300		.875	.250												
SND39_*__	1/2	(.5000)	11/16	(.6875)	.937	.250		⚡	⚡	⚡	⚡	⚡	⚡	⚡	⚡	⚡	⚡	⚡
SND39_*__OS	1/2	(.5000)	0.6925		.937	.250												
SND41_*__	9/16	(.5625)	3/4	(.7500)	1.000	.250		⚡	⚡	⚡	⚡	⚡	⚡	⚡	⚡	⚡	⚡	⚡
SND41_*__OS	9/16	(.5625)	0.7550		1.000	.250												
SND45_*__	5/8	(.6250)	7/8	(.8750)	1.125	.250		⚡	⚡	⚡	⚡	⚡	⚡	⚡	⚡	⚡	⚡	⚡
SND45_*__OS	5/8	(.6250)	0.8800		1.125	.250												
SND47_*__	3/4	(.7500)	1	(1.0000)	1.250	.250		⚡	⚡	⚡	⚡	⚡	⚡	⚡	⚡	⚡	⚡	⚡
SND47_*__OS	3/4	(.7500)	1.0050		1.250	.250												

†SND13 and SND15 have a 1.75 bearing length. All sleeves are for use with DME INCH Ejector Pins.

***HOW TO ORDER: Combine Item Prefix and the length (L dimension) desired.**
• Precede single digit lengths with a zero. Examples: SND2506, SND1710

KEY TO CHART

⚡ **In stock**
Non-stocked - Call for lead time
Special Order

DME

INCH PINS, SLEEVES, BLADES

INCH Ejector Blades

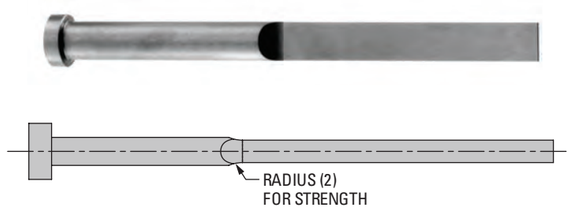

- Blade thickness and width are held to close tolerance: +.0000/-.0003
- Precision made of superior quality M2 high-speed tool steel
- Through-hardened to 58-62 HRC for superior wear resistance
- Heads annealed for easy machining
- One-piece construction for increased strength and rigidity

INFORMATION KEY:
D = Shoulder Diameter
H = Head Diameter
K = Head Thickness
L = Overall Length
T = Blade Thickness
W = Blade Width
Material: M2 / 1.3343 / SKH51
Surface Treatment: None (Through-Hard)

INCH Ejector Blades – EJB-IMH

ITEM NUMBER	T BLADE THICKNESS	W BLADE WIDTH	Ø D SHOULDER DIAMETER	Ø H HEAD DIAMETER	K HEAD THICKNESS	L OVERALL LENGTH
EJB-IMH-024-100-065	0.0240	0.1000	0.1250	0.250	0.125	6.50
EJB-IMH-032-100-065	0.0320	0.1000	0.1250	0.250	0.125	6.50
EJB-IMH-032-100-075	0.0320	0.1000	0.1250	0.250	0.125	7.50
EJB-IMH-046-100-065	0.0460	0.1000	0.1250	0.250	0.125	6.50
EJB-IMH-046-100-075	0.0460	0.1000	0.1250	0.250	0.125	7.50
EJB-IMH-024-140-065	0.0240	0.1400	0.1562	0.281	0.156	6.50
EJB-IMH-032-140-065	0.0320	0.1400	0.1562	0.281	0.156	6.50
EJB-IMH-032-140-075	0.0320	0.1400	0.1562	0.281	0.156	7.50
EJB-IMH-032-140-085	0.0320	0.1400	0.1562	0.281	0.156	8.50
EJB-IMH-046-140-065	0.0460	0.1400	0.1562	0.281	0.156	6.50
EJB-IMH-046-140-075	0.0460	0.1400	0.1562	0.281	0.156	7.50
EJB-IMH-046-140-085	0.0460	0.1400	0.1562	0.281	0.156	8.50
EJB-IMH-024-172-065	0.0240	0.1720	0.1875	0.375	0.187	6.50
EJB-IMH-032-172-065	0.0320	0.1720	0.1875	0.375	0.187	6.50
EJB-IMH-032-172-075	0.0320	0.1720	0.1875	0.375	0.187	7.50
EJB-IMH-032-172-085	0.0320	0.1720	0.1875	0.375	0.187	8.50
EJB-IMH-046-172-065	0.0460	0.1720	0.1875	0.375	0.187	6.50
EJB-IMH-046-172-075	0.0460	0.1720	0.1875	0.375	0.187	7.50
EJB-IMH-046-172-085	0.0460	0.1720	0.1875	0.375	0.187	8.50
EJB-IMH-062-172-065	0.0620	0.1720	0.1875	0.375	0.187	6.50
EJB-IMH-062-172-075	0.0620	0.1720	0.1875	0.375	0.187	7.50
EJB-IMH-062-172-085	0.0620	0.1720	0.1875	0.375	0.187	8.50
EJB-IMH-032-234-065	0.0320	0.2340	0.2500	0.437	0.187	6.50
EJB-IMH-032-234-075	0.0320	0.2340	0.2500	0.437	0.187	7.50
EJB-IMH-032-234-085	0.0320	0.2340	0.2500	0.437	0.187	8.50
EJB-IMH-046-234-065	0.0460	0.2340	0.2500	0.437	0.187	6.50
EJB-IMH-046-234-075	0.0460	0.2340	0.2500	0.437	0.187	7.50
EJB-IMH-046-234-085	0.0460	0.2340	0.2500	0.437	0.187	8.50
EJB-IMH-062-234-065	0.0620	0.2340	0.2500	0.437	0.187	6.50
EJB-IMH-062-234-075	0.0620	0.2340	0.2500	0.437	0.187	7.50
EJB-IMH-062-234-085	0.0620	0.2340	0.2500	0.437	0.187	8.50
EJB-IMH-062-234-095	0.0620	0.2340	0.2500	0.437	0.187	9.50
EJB-IMH-032-296-065	0.0320	0.2960	0.3125	0.500	0.250	6.50
EJB-IMH-032-296-075	0.0320	0.2960	0.3125	0.500	0.250	7.50
EJB-IMH-032-296-085	0.0320	0.2960	0.3125	0.500	0.250	8.50
EJB-IMH-032-296-095	0.0320	0.2960	0.3125	0.500	0.250	9.50

INCH PINS, SLEEVES, BLADES

INCH Ejector Blades

ITEM NUMBER	T BLADE THICKNESS	W BLADE WIDTH	Ø D SHOULDER DIAMETER	Ø H HEAD DIAMETER	K HEAD THICKNESS	L OVERALL LENGTH
EJB-IMH-046-296-065	0.0460	0.2960	0.3125	0.500	0.250	6.50
EJB-IMH-046-296-075	0.0460	0.2960	0.3125	0.500	0.250	7.50
EJB-IMH-046-296-085	0.0460	0.2960	0.3125	0.500	0.250	8.50
EJB-IMH-046-296-095	0.0460	0.2960	0.3125	0.500	0.250	9.50
EJB-IMH-062-296-065	0.0620	0.2960	0.3125	0.500	0.250	6.50
EJB-IMH-062-296-075	0.0620	0.2960	0.3125	0.500	0.250	7.50
EJB-IMH-062-296-085	0.0620	0.2960	0.3125	0.500	0.250	8.50
EJB-IMH-062-296-095	0.0620	0.2960	0.3125	0.500	0.250	9.50
EJB-IMH-078-296-065	0.0780	0.2960	0.3125	0.500	0.250	6.50
EJB-IMH-078-296-075	0.0780	0.2960	0.3125	0.500	0.250	7.50
EJB-IMH-078-296-085	0.0780	0.2960	0.3125	0.500	0.250	8.50
EJB-IMH-078-296-095	0.0780	0.2960	0.3125	0.500	0.250	9.50
EJB-IMH-032-359-065	0.0320	0.3590	0.3750	0.625	0.250	6.50
EJB-IMH-032-359-075	0.0320	0.3590	0.3750	0.625	0.250	7.50
EJB-IMH-032-359-085	0.0320	0.3590	0.3750	0.625	0.250	8.50
EJB-IMH-032-359-095	0.0320	0.3590	0.3750	0.625	0.250	9.50
EJB-IMH-046-359-065	0.0460	0.3590	0.3750	0.625	0.250	6.50
EJB-IMH-046-359-075	0.0460	0.3590	0.3750	0.625	0.250	7.50
EJB-IMH-046-359-085	0.0460	0.3590	0.3750	0.625	0.250	8.50
EJB-IMH-046-359-095	0.0460	0.3590	0.3750	0.625	0.250	9.50
EJB-IMH-062-359-065	0.0620	0.3590	0.3750	0.625	0.250	6.50
EJB-IMH-062-359-075	0.0620	0.3590	0.3750	0.625	0.250	7.50
EJB-IMH-062-359-085	0.0620	0.3590	0.3750	0.625	0.250	8.50
EJB-IMH-062-359-095	0.0620	0.3590	0.3750	0.625	0.250	9.50
EJB-IMH-078-359-065	0.0780	0.3590	0.3750	0.625	0.250	6.50
EJB-IMH-078-359-075	0.0780	0.3590	0.3750	0.625	0.250	7.50
EJB-IMH-078-359-085	0.0780	0.3590	0.3750	0.625	0.250	8.50
EJB-IMH-078-359-095	0.0780	0.3590	0.3750	0.625	0.250	9.50
EJB-IMH-094-422-065	0.0940	0.4220	0.4375	0.687	0.250	6.50
EJB-IMH-094-422-075	0.0940	0.4220	0.4375	0.687	0.250	7.50
EJB-IMH-094-422-085	0.0940	0.4220	0.4375	0.687	0.250	8.50
EJB-IMH-094-422-095	0.0940	0.4220	0.4375	0.687	0.250	9.50
EJB-IMH-078-484-065	0.0780	0.4840	0.5000	0.750	0.250	6.50
EJB-IMH-078-484-075	0.0780	0.4840	0.5000	0.750	0.250	7.50
EJB-IMH-078-484-085	0.0780	0.4840	0.5000	0.750	0.250	8.50
EJB-IMH-078-484-095	0.0780	0.4840	0.5000	0.750	0.250	9.50
EJB-IMH-094-484-065	0.0940	0.4840	0.5000	0.750	0.250	6.50
EJB-IMH-094-484-075	0.0940	0.4840	0.5000	0.750	0.250	7.50
EJB-IMH-094-484-085	0.0940	0.4840	0.5000	0.750	0.250	8.50
EJB-IMH-094-484-095	0.0940	0.4840	0.5000	0.750	0.250	9.50
EJB-IMH-078-547-065	0.0780	0.5470	0.5625	0.812	0.250	6.50
EJB-IMH-078-547-075	0.0780	0.5470	0.5625	0.812	0.250	7.50
EJB-IMH-078-547-085	0.0780	0.5470	0.5625	0.812	0.250	8.50
EJB-IMH-078-547-095	0.0780	0.5470	0.5625	0.812	0.250	9.50
EJB-IMH-094-547-065	0.0940	0.5470	0.5625	0.812	0.250	6.50
EJB-IMH-094-547-075	0.0940	0.5470	0.5625	0.812	0.250	7.50
EJB-IMH-094-547-085	0.0940	0.5470	0.5625	0.812	0.250	8.50
EJB-IMH-094-547-095	0.0940	0.5470	0.5625	0.812	0.250	9.50
EJB-IMH-078-609-065	0.0780	0.6090	0.6250	0.875	0.250	6.50
EJB-IMH-078-609-075	0.0780	0.6090	0.6250	0.875	0.250	7.50
EJB-IMH-078-609-085	0.0780	0.6090	0.6250	0.875	0.250	8.50
EJB-IMH-078-609-095	0.0780	0.6090	0.6250	0.875	0.250	9.50
EJB-IMH-094-609-065	0.0940	0.6090	0.6250	0.875	0.250	6.50
EJB-IMH-094-609-075	0.0940	0.6090	0.6250	0.875	0.250	7.50
EJB-IMH-094-609-085	0.0940	0.6090	0.6250	0.875	0.250	8.50
EJB-IMH-094-609-095	0.0940	0.6090	0.6250	0.875	0.250	9.50

INCH PINS, SLEEVES, BLADES

INCH Core Pins – H13 – Standard Medium Hardness

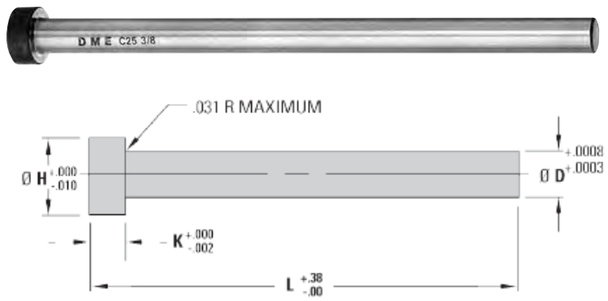

- Precision made of superior quality hotwork die steel standard hardness 38-42 HRC
- Heads are hot-forged for uniform grain flow, higher tensile strength, then annealed to permit easier machining and stamping
- +.0008"/+.0003" tolerance on pin diameter ensures a close fit for coring purposes
- Pin body and head are finish ground
- Centerless ground and polished outer diameter

INCH Core Pins – C

ITEM PREFIX	Ø D PIN DIA		Ø H HEAD DIA	K HEAD THICK	L = LENGTH			
					3†	6	10	14
C7M_*	3/32	(.0937)	.250	.125	⚡	⚡	⚡	
C8M_*	7/64	(.1093)	.250	.125	⚡	⚡	⚡	
C9M_*	1/8	(.1250)	.250	.125	⚡	⚡	⚡	⚡
C10M_*	9/64	(.1406)	.250	.125	⚡	⚡	⚡	⚡
C11M_*	5/32	(.1562)	.281	.156	⚡	⚡	⚡	⚡
C12M_*	11/64	(.1718)	.343	.187	⚡	⚡	⚡	⚡
C13M_*	3/16	(.1875)	.375	.187	⚡	⚡	⚡	⚡
C14M_*	13/64	(.2031)	.375	.187	⚡	⚡	⚡	⚡
C15M_*	7/32	(.2187)	.406	.187	⚡	⚡	⚡	⚡
C17M_*	1/4	(.2500)	.437	.187	⚡	⚡	⚡	⚡
C19M_*	9/32	(.2812)	.437	.250	⚡	⚡	⚡	⚡
C21M_*	5/16	(.3125)	.500	.250	⚡	⚡	⚡	⚡
C23M_*	11/32	(.3437)	.562	.250	⚡	⚡	⚡	⚡
C25M_*	3/8	(.3750)	.625	.250	⚡	⚡	⚡	⚡
C27M_*	13/32	(.4062)	.687	.250	⚡	⚡	⚡	⚡
C29M_*	7/16	(.4375)	.687	.250	⚡	⚡	⚡	⚡
C31M_*	15/32	(.4687)	.750	.250	⚡	⚡	⚡	⚡
C33M_*	1/2	(.5000)	.750	.250	⚡	⚡	⚡	⚡
C35M_*	9/16	(.5625)	.812	.250		⚡	⚡	⚡
C37M_*	5/8	(.6250)	.875	.250		⚡	⚡	⚡
C41M_*	3/4	(.7500)	1.000	.250		⚡	⚡	⚡

†Heads of 3"-length pins are not annealed. If annealed heads on 3"-length pins are required, they must be special ordered. (Alternately, you may purchase 6" pins and cut to required length.)

***HOW TO ORDER: Combine Item Number Prefix and the length (L dimension) desired.**
Examples: C9M3, C33M10

Typical application

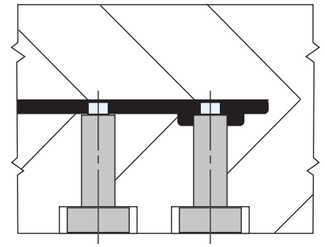

Hardness checking guidelines

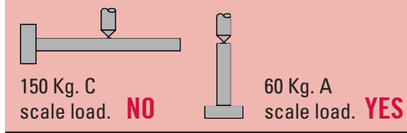

150 Kg. C scale load. **NO**

60 Kg. A scale load. **YES**

If checking hardness of core pins, do not use method "NO" above, since it will provide an inaccurately low reading. The preferred method is to stand the pin on its head and check the cut end using the A scale, 60 Kg. load as shown above.

PRECAUTIONS:

The cut end must be parallel to head end, with stem length of 2" minimum. Use cutting fluid to avoid overheating and localized annealing. Position indentation in middle of pin diameter.

KEY TO CHART

⚡ Items in stock

Contact DME for quote

INCH PINS, SLEEVES, BLADES

INCH Core Pins – High Hardness



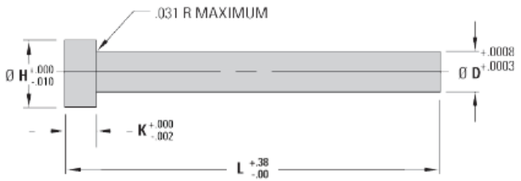



Specials available.
See "Special Pins and Sleeves."

- Precision made of superior quality hotwork die steel in high hardness 50-55 HRC
- Heads are hot-forged for uniform grain flow, higher tensile strength, then annealed to permit easier machining and stamping
- +.0008"/+.0003"- tolerance on pin diameter ensures a close fit for coring purposes
- Pin body and head are finish ground
- Centerless ground and liquid polished

INCH Core Pins – CX

ITEM PREFIX	Ø D PIN DIA		Ø H HEAD DIA	K HEAD THICK	LENGTH			
					3†	6	10	14
CX7M_*_	3/32	(.0937)	.250	.125	⚡	⚡	⚡	
CX8M_*_	7/64	(.1093)	.250	.125	⚡	⚡	⚡	
CX9M_*_	1/8	(.1250)	.250	.125	⚡	⚡	⚡	⚡
CX10M_*_	9/64	(.1406)	.250	.125	⚡	⚡	⚡	⚡
CX11M_*_	5/32	(.1562)	.281	.156	⚡	⚡	⚡	⚡
CX12M_*_	11/64	(.1718)	.343	.187	⚡	⚡	⚡	⚡
CX13M_*_	3/16	(.1875)	.375	.187	⚡	⚡	⚡	⚡
CX14M_*_	13/64	(.2031)	.375	.187	⚡	⚡	⚡	⚡
CX15M_*_	7/32	(.2187)	.406	.187	⚡	⚡	⚡	⚡
CX17M_*_	1/4	(.2500)	.437	.187	⚡	⚡	⚡	⚡
CX19M_*_	9/32	(.2812)	.437	.250	⚡	⚡	⚡	⚡
CX21M_*_	5/16	(.3125)	.500	.250	⚡	⚡	⚡	⚡
CX23M_*_	11/32	(.3437)	.562	.250	⚡	⚡	⚡	⚡
CX25M_*_	3/8	(.3750)	.625	.250	⚡	⚡	⚡	⚡
CX27M_*_	13/32	(.4062)	.687	.250	⚡	⚡	⚡	⚡
CX29M_*_	7/16	(.4375)	.687	.250	⚡	⚡	⚡	⚡
CX31M_*_	15/32	(.4687)	.750	.250	⚡	⚡	⚡	⚡
CX33M_*_	1/2	(.5000)	.750	.250	⚡	⚡	⚡	⚡
CX35M_*_	9/16	(.5625)	.812	.250		⚡	⚡	⚡
CX37M_*_	5/8	(.6250)	.875	.250		⚡	⚡	⚡
CX41M_*_	3/4	(.7500)	1.000	.250		⚡	⚡	⚡

†Heads of 3"-length pins are not annealed. If annealed heads on 3"-length pins are required, they must be special ordered. (Alternately, you may purchase 6" pins and cut to required length.)

KEY TO CHART

⚡ **Items in stock**

Contact DME for quote

***HOW TO ORDER: Combine Item Number Prefix and the length (L dimension) desired.**
Examples: CX9M3, CX33M10

INCH PINS, SLEEVES, BLADES

Vortex™ Core Pins and Plugs

Porcerax II™



Vortex Core Pins and Plugs are made from Porcerax II. Porcerax II is a porous, sintered metal with a porosity of 20 to 30% by volume. With a series of interconnected pores averaging a diameter of 7 (.0003") or 20 (.0008") microns throughout, the primary function is the elimination of gas.

Vortex Pins and Plugs provide a location-specific method of venting gas. Due to its porosity volume, one fourth of the surface becomes a vent.

Vortex Pins & Plugs

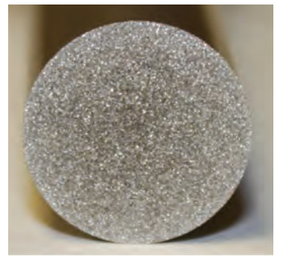

- Pins are 3" long and are available in diameters of .250", .375" and .500"
- Plugs are offered in .250", .500" and 1.00" lengths in diameters of .250" and .375"
- Heat treated to 30–40 HRC [Hardness: HMV 300–400]
- Tensile strength: 74,000 lbs./sq.in.
- Thermal Linear Expansion Coefficient: (at 68˚F - 302˚F) 6.67-6.94 E-06 in./in./F˚
- Porosity: 20 to 30% air by volume
- Heat transfer co-efficient (at room temperature): 16.93–19.35 BTU/ft. hr. F˚

Vortex Core Pin



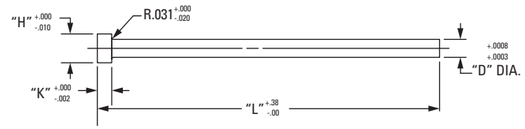

ITEM NUMBER	D PIN DIA	H HEAD DIA	L PIN LENGTH	K HEAD THICKNESS	PORE SIZE MICRONS
PC17M320	.250	0.437	3	0.187	20
PC17M307	.250	0.437	3	0.187	7
PC25M320	.375	0.625	3	0.25	20
PC25M307	.375	0.625	3	0.25	7
PC33M320	.5000	0.75	3	0.25	20
PC33M307	.5000	0.75	3	0.25	7

Vortex Plug

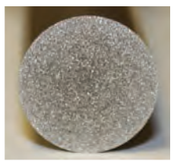

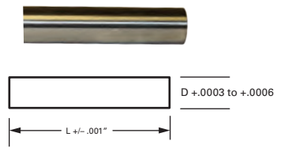

(+.0003 – +0.0006 on OD, +/– .001 on length)

ITEM NUMBER	D PIN DIA	L PIN LENGTH	MICRONS
PP141407	0.25	0.25	7
PP141420	0.25	0.25	20
PP141207	.250	0.50	7
PP141220	.250	0.50	20
PP381207	.375	0.50	7
PP381220	.375	0.50	20
PP38107	.375	1.00	7
PP38120	.375	1.00	20

"All technical and engineering data and suggested procedures, specifications and applications contained in this publication are for general information only. Sinto Steel, Molder's World, Inc., International Mold Steel and/or their distributors disclaim any and all express or implied warranties of merchantability, suitability for any particular purpose or use, or freedom form infringement of any patent, trademark or copyright. Porcerax II® is a registered trademark of International Mold Steel, Inc. and SintoSteel."

INCH PINS, SLEEVES, BLADES

Copper-Based Alloy Core Pins – High Conductivity Pins



- Reduces cycle times
- Ten times better conductivity than steel
- Beryllium-free copper-based alloy
- Hardness of 90-98 Rockwell B
- Available in 18 diameters and four lengths

DME's Copper-Based Alloy Core Pins are precision made using a high-strength, beryllium-free copper alloy, rather than traditional steels used in core pins. This alloy provides several advantages, including better conductivity, increased strength, reduced wear and resistance to rusting. These Core Pins are ideal for use in high-volume applications where part quality, fit and finish are critical.

Reduced cycle time

It is often difficult or expensive to adequately cool the area surrounding the core pin in a mold, especially when molding thick-walled parts. Depending on the design of the mold, it may even be impossible to run water lines near the pin, thus greatly increasing cycle times.

The copper-based alloy used in these Core Pins can significantly reduce mold cycle times by increasing the rate of heat transfer. When used in place of traditional C- or CX-type pins, will provide up to 10 times the rate of heat transfer. Heat is transferred at twice the rate of pins made of a beryllium-copper alloy.

In addition, the low-adhesion characteristics of the pins make part ejection faster and easier. All of these advantages combine to reduce the overall cycle time and increase productivity.

Improved part quality

The excellent thermal diffusivity of the pins provide a homogenous temperature profile throughout the core surface. Uniform temperatures result in reduced post-mold shrinkage and warpage, improving the quality of the part. Also, because of the low-adhesion characteristics of the pin, parts are not damaged by adhesion to the pin during part ejection.

Lower machining costs

The high thermal conductivity of Copper-Based Alloy Core Pins reduces the need for complex cooling designs that can require hours of additional machining. Plus, the pins require no additional heat treatment and can be machined using conventional methods or EDM.

Longer service life

A high resistance to thermal stress, wear and abrasion which helps assure long life under virtually any molding conditions. With appropriate alteration to pin diameter, they can be used in conjunction with standard ejector sleeves. The dissimilar metals and compatible coefficient of friction will reduce metal-to-metal pick up and wear.

Wide range of sizes

Available in 18 pin diameters from 3/32- to 3/4- and 3-, 6-, 14- or 20-inch lengths.

Typical Mold

As shown in the pie chart, mold cooling comprises the largest part of the mold cycle. Copper-Based Alloy Core Pins can significantly reduce this mold cooling portion to reduce overall cycle time!

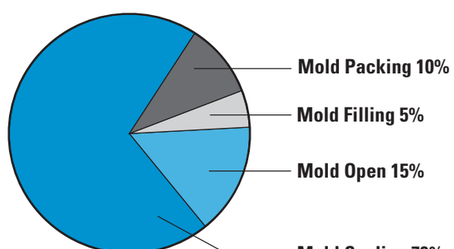

INCH PINS, SLEEVES, BLADES

Copper-Based Alloy Core Pins – High Conductivity Pins



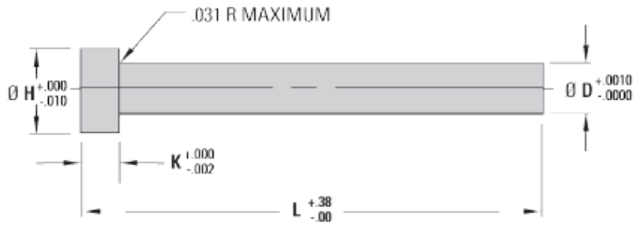

- Beryllium-free copper-based alloy
- Ten times better conductivity than steel
- Reduces cycle times
- Hardness of 90-98 Rockwell B
- Specials are also available upon request

Copper-Based Alloy Core Pins – PCL

ITEM PREFIX	Ø D PIN DIA		Ø H HEAD DIA	K HEAD THICK	L = LENGTH			
					3	6	14	20
PCL07_*__	3/32	(.0937)	.250	.125	⚡	⚡	⚡	
PCL09_*__	1/8	(.1250)	.250	.125	⚡	⚡	⚡	⚡
PCL11_*__	5/32	(.1562)	.281	.156	⚡	⚡	⚡	⚡
PCL12_*__	11/64	(.1718)	.343	.187	⚡	⚡		
PCL13_*__	3/16	(.1875)	.375	.187	⚡	⚡	⚡	⚡
PCL14_*__	13/64	(.2031)	.375	.187	⚡	⚡	⚡	
PCL15_*__	7/32	(.2187)	.406	.187	⚡	⚡	⚡	⚡
PCL17_*__	1/4	(.2500)	.437	.187	⚡	⚡	⚡	⚡
PCL19_*__	9/32	(.2812)	.437	.250	⚡	⚡	⚡	
PCL21_*__	5/16	(.3125)	.500	.250	⚡	⚡	⚡	⚡
PCL23_*__	11/32	(.3437)	.562	.250	⚡	⚡	⚡	
PCL25_*__	3/8	(.3750)	.625	.250	⚡	⚡	⚡	⚡
PCL27_*__	13/32	(.4062)	.687	.250		⚡		
PCL29_*__	7/16	(.4375)	.687	.250	⚡	⚡	⚡	
PCL33_*__	1/2	(.5000)	.750	.250	⚡	⚡	⚡	
PCL35_*__	9/16	(.5625)	.812	.250	⚡	⚡	⚡	
PCL37_*__	5/8	(.6250)	.875	.250	⚡	⚡	⚡	
PCL41_*__	3/4	(.7500)	1.000	.250	⚡	⚡	⚡	

***HOW TO ORDER: Combine Item Number Prefix and the length (L dimension) desired.**
• Precede single digit lengths with a zero. Examples: PCL2514, PCL0703, PCL2520

KEY TO CHART
⚡ **Items in stock**
Contact DME for quote

INCH PINS, SLEEVES, BLADES

Core Pin Retainers

Core Pin Retainers



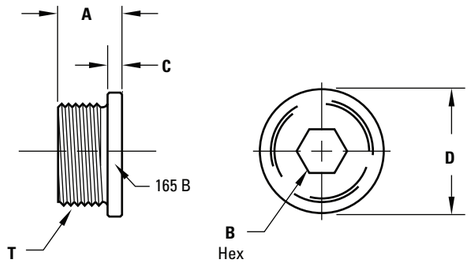

DME Standard Core Pin Retainers offer better performance than a set screw and allow the core pin to float within the counter-bore. Conveniently machined in the same setup and location as the corresponding pin hole, Core Pin Retainers eliminate labor costs to make individual backup plates.

INCH Standard

ITEM NUMBER	A +.002/–.000	C +.000/–.002	D O.D.	B HEX	T THREAD
CPR50	.437	.125	.750	.25	½–20
CPR87	.437	.125	1.060	.37	⅞–14

AISI 12L14 (165 Brinell)
Black oxide

METRIC Standard

ITEM NUMBER	A +.00/–.05	C +.00/–.05	D O.D.	B HEX	T THREAD
CPRM16	11	4	20	8	M16–1.5

AISI 12L14 (165 Brinell)
Black oxide

CPR-50	
CORE PIN DIAMETER	H
3/32 Ø – 3/64 Ø	.563
5/32 Ø	.594
11/64 Ø – 1/4 Ø	.625
3/32 Ø	.688

CPR-87	
CORE PIN DIAMETER	H
5/16 Ø – 1/2 Ø	.688

CPRM-16	
CORE PIN DIAMETER	H
2 – 2.5mm	13mm
3 – 6mm	14mm

CPR-50 Machining Specifications

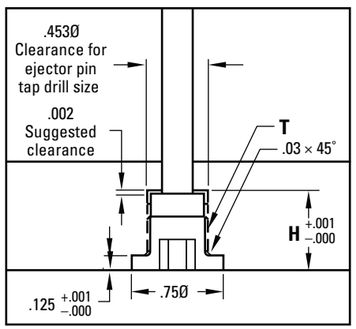

CPR-87 Machining Specifications

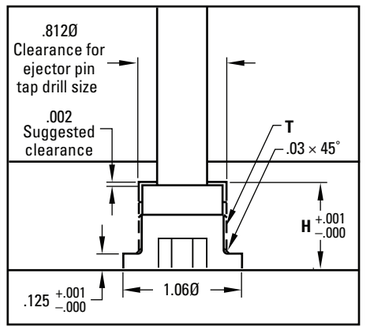

CPRM-16 Machining Specifications

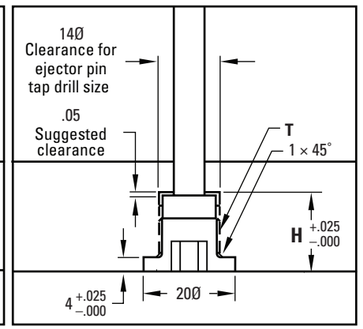

US Patent No. 6,872,069

DME

INCH PINS, SLEEVES, BLADES

INCH Return Pins



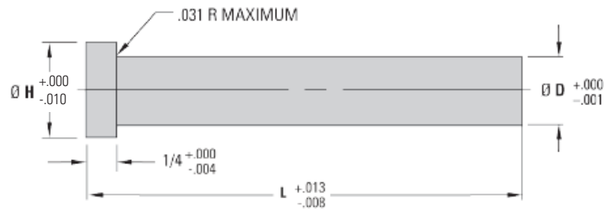

- Precision made of superior quality thermal shock resisting hotwork die steel
- Hot-forged heads provide uniform grain flow, higher tensile strength
- Outside diameter nitrided to 65-74 HRC hardness and finished to minimize wear
- Centerless ground and polished outer diameter

.500 (1/2") Diameter Series

ITEM NUMBER	Ø D PIN DIA	Ø H HEAD DIA	L PIN LENGTH
7410	.500	.750	3.563
7411			4.063
7412			4.563
7413			5.063
7414			5.563
7415			6.063
7416			6.563

For longer lengths, use EX33 Ejector Pins.

.625 (5/8") Diameter Series

ITEM NUMBER	Ø D PIN DIA	Ø H HEAD DIA	L PIN LENGTH
7510	.625	.875	4.063
7511			4.563
7512			5.063
7513			5.563
7514			6.063
7515			6.563
7516			7.063
7517			7.563
7518			8.063

For longer lengths, use EX37 Ejector Pins.

.750 (3/4") Diameter Series

ITEM NUMBER	Ø D PIN DIA	Ø H HEAD DIA	L PIN LENGTH
7610	.750	1.000	4.938
7611			5.438
7612			5.938
7613			6.438
7614			6.938
7615			7.438
7616			7.938
7617			8.438
7618			8.938
7619			9.438

For longer lengths, use EX41 Ejector Pins.

Use Item Number in charts above for ordering. All items in stock.

DuPont™ Performance Lubricants Extreme conditions. Extreme performance. For use with all DME Pins, Sleeves & Blades

DuPont™ Krytox® TM7 grease is specifically designed for the lubrication of segmented molds, both electrically and steam-heated. This lubricant eliminates carbon residue buildup on the molds associated with hydrocarbon and hydrocarbon-based synthetic greases. It exhibits excellent adhesion, allowing the operator to significantly increase production by extending lubrication intervals. The TM7 will not bleed out to the parting line due to high heat tolerance and will last in excess of 5000 cycles, based on average curing times, without relubrication.

Krytox® TM7 is a fluorinated grease with polytetrafluorethylene (PTFE) thickeners and selected additives. It has excellent thermal stability and load-carrying abilities. TM7 has a high degree of chemical inertness and extremely high hydrolytic stability. Contact with boiling water or steam has no effect on this product, it will stay in the location it was applied, providing the best lubrication possible.

TYPICAL PROPERTIES OF DuPont™ Krytox® TM7	
Standard NLGI Penetration Grade	#2
Estimation Useful Temperature Range	-20 to 290 (-4 to 555)
Pour Point, °C (°F)	–25 (–13)
Base Oil Viscosity, cSt 20 °C (68 °F) 40 °C (104 °F) 100 °C (212 °F)	 1,715 500 46
Oil Volatility, % in 22 hr, 260 °C (500 °F), D972 modified	<1
Appearance	White, creamy consistency
Specific Gravity	2.0

PART NUMBER	DESCRIPTION
TM7TUBE2OZ	TM7 KRYTOX GREASE 2OZ TUBE
TM7TUBE8OZ	TM7 KRYTOX GREASE 8OZ TUBE
TM7JAR1KG	TM7 KRYTOX GREASE 1KG JAR



INCH PINS, SLEEVES, BLADES

INCH Sprue Puller Pins

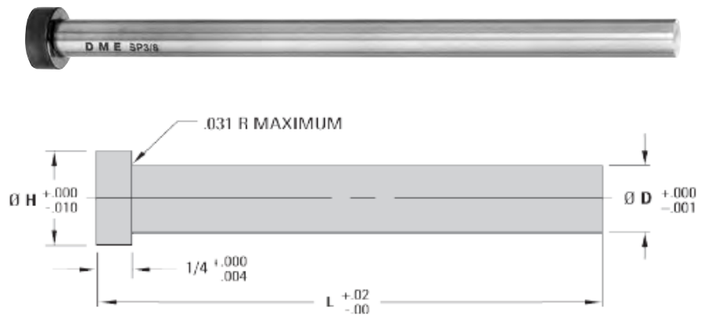

- Precision made of superior quality thermal shock resisting hotwork die steel
- Hot-forged heads provide uniform grain flow, higher tensile strength
- Outside diameter nitrided to 65-74 HRC hardness and finished to minimize wear
- Heads annealed for easy machining
- Centerless ground and polished outer diameter

.250 (1/4") Diameter Series

ITEM NUMBER	Ø D PIN DIA	Ø H HEAD DIA	K HEAD THICK	L PIN LENGTH
7110	.250	.437	.187	3.44
7111				3.94
7112				4.44
7113				4.94
7114				5.44
7115				5.94
7116				6.44

For longer lengths, use EX17 Ejector Pins.

.375 (3/8") Diameter Series

ITEM NUMBER	Ø D PIN DIA	Ø H HEAD DIA	K HEAD THICK	L PIN LENGTH
7210	.375	.625	.250	3.88
7211				4.38
7212				4.88
7213				5.38
7214				5.88
7215				6.38
7216				6.88
7217				7.38
7218				7.88
7219				8.38
7220				8.88
7221				9.38

For longer lengths, use EX25 Ejector Pins.

Use Item Number in charts above for ordering. All items in stock.

INCH PINS, SLEEVES, BLADES

Custom Pins and Sleeves – Faxable Quote Form

QUOTE FAX HOTLINES AVAILABLE or visit https://www.dme.net/request-quote/
United States: 888-808-4363 • Canada: 800-461-9965 • International: 248-398-7394

Custom Pins

Quantity:_____

Choose a pin type:

- ☐ **EX** (35 - 43 HRC core hardness with 65 - 70 HRC case hardness)
- ☐ **THX** (50 HRC - 55 HRC core hardness with 65 - 70 HRC case hardness)
- ☐ **CX** (50 - 55 HRC through hard)
- ☐ **C** (30 - 35 HRC through hard)

Material H-13 ☐
Other_____
Hardness _____ RC
Nitrided Yes ☐ No ☐
Comments_____
_____

Straight Pin

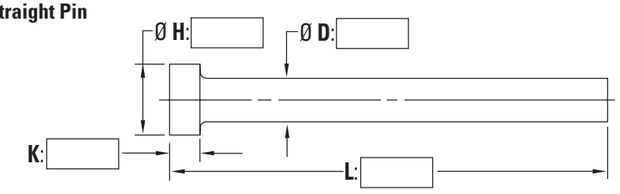

Step Pin

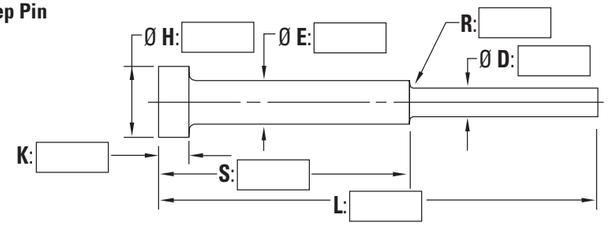

Custom Sleeves

Quantity:_____
☐ Nitride on OD (S)
☐ Nitride on OD + ID (SND)
Material H-13 ☐
Other_____
Hardness _____ RC
Nitrided Yes ☐ No ☐
Comments_____
_____

Sleeve

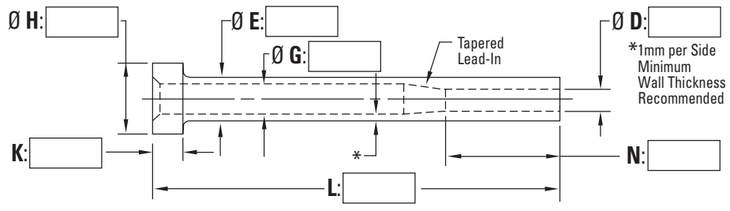

Step Sleeve

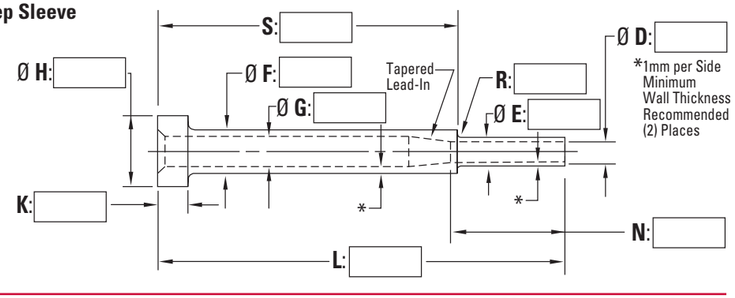

Company name: _____ **DME account #:** _____
Contact name: _____ **P.O.#:** _____
Phone: _____ **FAX:** _____
Address: _____ **E-mail:** _____
City: _____ **State/Province:** _____
ZIP/Postal Code: _____ **Country:** _____

Shipping method:

- ☐ **UPS Ground**
- ☐ **UPS 2nd Day Air**
- ☐ **UPS Next Day**
- ☐ **FedEx**
- ☐ **Other** _____

INCH PINS, SLEEVES, BLADES

Comparison Chart

DESCRIPTION	DIAMETER	MATERIAL	HARDNESS	BODY CONDITION	HEAD CONDITION
EX Ejector Pins EX2 (1/32) through EX8 (7/64)	–.0003 –.0006	H13	Surface 65-74 HRC Core 40-45 HRC	Nitrided Minimum .001 deep	Annealed
EX Ejector Pins EX9 (1/8) through EX32 (31/64) lengths – 6" through 18"	–.0003 –.0006	H13	Surface 65-74 HRC Core 40-45 HRC	Nitrided Minimum .001 deep	Annealed
EX Ejector Pins EX9 (1/8) through EX32 (31/64) lengths – 25" through 36"	–.0003 –.0008	H13	Surface 65-74 HRC Core 40-45 HRC	Nitrided Minimum .001 deep	Annealed
EX Ejector Pins EX33 (1/2) through EX47 (1")	–.0003 –.0008	H13	Surface 65-74 HRC Core 40-45 HRC	Nitrided Minimum .001 deep	Annealed
THX Ejector Pins THX03 (3/64) through THX08 (7/64)	–.0003 –.0006	H13	Surface 65-74 HRC Core 50-55 HRC	Nitrided Minimum .001 deep	Annealed
THX Ejector Pins THX09 (1/8) through THX32 (31/64) lengths – 6" through 18"	–.0003 –.0006	H13	Surface 65-74 HRC Core 50-55 HRC	Nitrided Minimum .001 deep	Annealed
THX Ejector Pins THX33 (1/2) through THX47 (1")	–.0003 –.0008	H13	Surface 65-74 HRC Core 50-55 HRC	Nitrided Minimum .001 deep	Annealed
Keyed Ejector Pins	–.0003 –.0003 –.0006 –.0008	H13	Surface 65-74 HRC Core 50-55 HRC	Nitrided	Annealed
EJP-IMH Close Tolerance Ejector Pins	–.0003 –.0005	M2	Core 58-62 HRC		Annealed
MoldBasics Ejector Pins	–.0002 –.0008	H13	Core 65 HRC MIN 40-45 HRC		
S Ejector Sleeves	O.D. +.0000 –.0010 I.D. +.0005 +.0000	H13	O.D. 65-74 HRC I.D. 30-35 HRC	Nitrided O.D. Minimum .001 deep	Annealed
SND Nitrided I.D. Ejector Sleeves	O.D. +.0000 –.0010 I.D. +.0005 +.0000	H13	O.D. 65-74 HRC I.D. 65-74 HRC	Nitrided O.D. & I.D. Minimum .001 deep	Annealed
Ejector Blades		M2	58-62 HRC		Annealed
C Core Pins	+.0008 +.0003	H13	Core 38-42 HRC	Through Hardened	3" length – Hard 6"-14" lengths – Annealed
CX High Hardness Core Pins	+.0008 +.0003	H13	Core 50-55 HRC	Through Hardened	3" length – Hard 6"-14" lengths – Annealed
PCL Performance High Conductivity Core Pins	+.0010 –.0000	Moldstar 150® Beryllium-free, Copper-based alloy (C18000)	90-98 HRB	not applicable	not applicable
Return Pins	+.0000 –.001	H13	Surface 65-74 HRC Core 40-55 HRC	Nitrided Minimum .001 deep	Annealed
Sprue Puller Pins	+.000 –.001	H13	Surface 65-74 HRC Core 40-45 HRC	Nitrided Minimum .001 deep	Annealed

INCH PINS, SLEEVES, BLADES

Hardness Conversion Table and DME Hardness Data

HARDNESS RANGE OF DME STANDARDS	BRINELL 3000 KG	ROCKWELL C 150 KG LOAD	ROCKWELL B 100 KG LOAD	ROCKWELL 15-N SUPER-FICIAL	SHORE SCLERO-SCOPE NO.	TENSILE STRENGTH (APPROX. P.S.I.)
		80		96.5		
		78		96.0		
		76		95.5		
EX, THX EJECTOR PINS **Surface Hardness**		74		95.0		
		72		94.5		
		70		94.0		
		69		93.5	96	
		67		93.0	95	
		66		92.5	92	
		65		92.0	91	
		64			88	
		63		91.5	87	
EJP-IMH EJECTOR PINS EJB-IMH EJECTOR BLADE **Core Hardness**		62		91.0	85	
		61		90.5	83	
	614	60		90.0	81	
	600	59		89.5	80	
	587	58			78	
	573	57		89.0	76	
	560	56		88.5	75	
CX CORE PINS, THX EJ. PINS, KEYED EJ. PINS **Core Hardness**	547	55		88.0	74	301,000
	534	54		87.5	72	291,000
	522	53		87.0	71	282,000
	509	52		86.5	69	273,000
	496	51		86.0	68	264,000
	484	50		85.5	67	255,000
	472	49		85.0	66	246,000
	460	48		84.5	64	237,000
	448	47		84.0	63	229,000
	437	46		83.5	62	221,000
EX EJECTOR PINS **Core Hardness**	426	45		83.0	60	214,000
	415	44		82.5	58	207,000
	404	43		82.0	57	200,000
	393	42		81.5	56	194,000
	382	41		81.0	55	188,000
	372	40		80.5	54	182,000

HARDNESS RANGE OF DME STANDARDS	BRINELL 3000 KG	ROCKWELL C 150 KG LOAD	ROCKWELL B 100 KG LOAD	ROCKWELL 15-N SUPER-FICIAL	SHORE SCLERO-SCOPE NO.	TENSILE STRENGTH (APPROX. P.S.I.)
	362	39		80.0	52	177,000
	352	38		79.5	51	171,000
	342	37		79.0	50	166,000
	332	36		78.5	49	162,000
C CORE PINS	322	35		78.0	48	157,000
	313	34		77.0	47	153,000
	305	33		76.5	46	148,000
	297	32		76.0	44	148,000
	290	31		75.5	43	140,000
	283	30		75.0	42	136,000
	276	29		74.5	41	132,000
	270	28		74.0	—	129,000
	265	27		73.5	40	126,000
	260	26		72.5	38	123,000
	255	25		72.0	—	120,000
	250	24		71.5	37	117,000
	245	23	100	71.0	36	115,000
	240	22	99	70.5	35	112,000
	235	20	98	69.5	34	108,000
PCL PERFOR-MANCE CORE PINS	230	20	98	69.5	34	108,000
	201		94		31	98,000
	197		93		30	95,000
	192		92		29	93,000
	187		91		—	90,000
	183		90		28	89,000
	179		89		27	87,000
	174		88		27	87,000
	170		87		26	83,000
	167		86		—	81,000
	163		85		25	79,000
	156		83		24	76,000
	149		81		23	73,000
	143		79		22	71,000
	137		76		21	67,000
	131		74		—	65,000

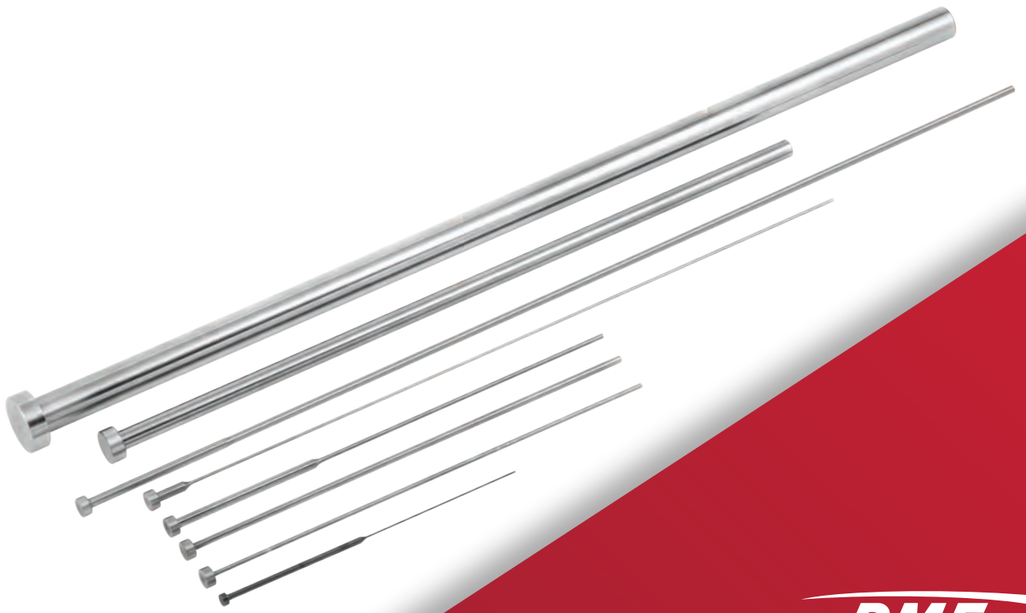

DME DIN PINS, SLEEVES, BLADES

A COMPREHENSIVE LINE
OF DIN EJECTOR PRODUCTS

Table of Contents

EJECTOR PINS
EJP-EHN (Nitrided) 337
EJP-ELH (Hardened) 338

SHOULDER EJECTOR PINS
EJP-EHN (Nitrided) 339
EJP-ELH (Hardened) 340

EJECTOR SLEEVES
EJS-EHN (Nitrided) 341
EJS-ELH (Hardened) 342

EJECTOR BLADES
EJB-EHN (Nitrided) 343
EJB-ELH (Hardened) 344

CORE PINS
CRP-EHH (Hardened) 345
CRP-ECS (Performance) 346

FAX ORDER FORM – SPECIAL DIN PINS & SLEEVES
Faxable Quote Request Form 347

DIN PINS, SLEEVES, BLADES

DIN Ejector Pins – Nitrided

DIN Ejector Pins – EJP-EHN

Expulsores I Extractores I Ejecteurs Epingles I Auswerferstifte

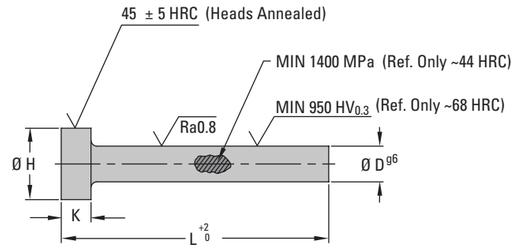

INFORMATION KEY:
D = Pin Body Diameter
H = Head Diameter
K = Head Thickness
L = Length
Material: 1.2344 (AISI H13 Type) Steel
Surface Treatment: Nitrided
Max. Temp.: 500˚-550˚C (932˚-1022˚F)
Dimensions: Shown in Millimeters (mm)

ITEM PREFIX	D	H	K	L										
				0100	0125	0160	0200	0250	0315	0400	0500	0630	0800	1000
EJP-EHN (EA)*	01.2	3	1.5	⚡		⚡								
	01.5	3	1.5	⚡	⚡	⚡	⚡							
	02.0	4	2	⚡	⚡	⚡	⚡	⚡	⚡					
	02.2	4	2	⚡	⚡	⚡	⚡	⚡	⚡					
	02.5	5	2	⚡	⚡	⚡	⚡	⚡	⚡					
	02.7	5	2	⚡	⚡	⚡	⚡	⚡	⚡					
	03.0	6	3	⚡	⚡	⚡	⚡	⚡	⚡	⚡	⚡			
	03.2	6	3	⚡	⚡	⚡	⚡	⚡	⚡	⚡				
	03.5	7	3	⚡	⚡	⚡	⚡	⚡	⚡	⚡				
	03.7	7	3	⚡	⚡	⚡	⚡	⚡	⚡	⚡				
	04.0	8	3	⚡	⚡	⚡	⚡	⚡	⚡	⚡	⚡			
	04.2	8	3	⚡	⚡	⚡	⚡	⚡	⚡	⚡				
	04.5	8	3	⚡	⚡	⚡	⚡	⚡	⚡	⚡				
	05.0	10	3	⚡	⚡	⚡	⚡	⚡	⚡	⚡	⚡	⚡	⚡	
	05.2	10	3	⚡	⚡	⚡	⚡	⚡	⚡	⚡	⚡			
	05.5	10	3	⚡	⚡	⚡	⚡	⚡	⚡	⚡	⚡			
	06.0	12	5	⚡	⚡	⚡	⚡	⚡	⚡	⚡	⚡	⚡	⚡	⚡
	06.2	12	5	⚡	⚡	⚡	⚡	⚡	⚡	⚡	⚡	⚡		
	06.5	12	5	⚡	⚡	⚡	⚡	⚡	⚡	⚡	⚡			
	07.0	12	5	⚡	⚡	⚡	⚡	⚡	⚡	⚡	⚡	⚡		
	08.0	14	5	⚡	⚡	⚡	⚡	⚡	⚡	⚡	⚡	⚡	⚡	⚡
	08.2	14	5	⚡	⚡	⚡	⚡	⚡	⚡	⚡	⚡	⚡		
	08.5	14	5	⚡	⚡	⚡	⚡	⚡	⚡	⚡	⚡	⚡		
	09.0	14	5	⚡	⚡	⚡	⚡	⚡	⚡	⚡	⚡	⚡		
	10.0	16	5	⚡	⚡	⚡	⚡	⚡	⚡	⚡	⚡	⚡	⚡	⚡
	10.2	16	5	⚡	⚡	⚡	⚡	⚡	⚡	⚡	⚡	⚡		
	10.5	16	5	⚡	⚡	⚡	⚡	⚡	⚡	⚡	⚡	⚡		
	11.0	16	5	⚡	⚡	⚡	⚡	⚡	⚡	⚡	⚡	⚡		
	12.0	18	7	⚡	⚡	⚡	⚡	⚡	⚡	⚡	⚡	⚡	⚡	⚡
	12.2	18	7	⚡	⚡	⚡	⚡	⚡	⚡	⚡	⚡	⚡		
	12.5	18	7	⚡	⚡	⚡	⚡	⚡	⚡	⚡	⚡	⚡	⚡	
	14.0	22	7	⚡	⚡	⚡	⚡	⚡	⚡	⚡	⚡	⚡	⚡	⚡
	16.0	22	7	⚡	⚡	⚡	⚡	⚡	⚡	⚡	⚡	⚡	⚡	⚡
	18.0	24	7	⚡	⚡	⚡	⚡	⚡	⚡	⚡	⚡	⚡	⚡	⚡
	20.0	26	8	⚡	⚡	⚡	⚡	⚡	⚡	⚡	⚡	⚡	⚡	⚡
	25.0	32	10			⚡	⚡	⚡	⚡	⚡	⚡	⚡	⚡	⚡
	32.0	40	10			⚡	⚡	⚡	⚡	⚡	⚡	⚡	⚡	⚡

* "(EA)" is only a cross-reference to current DME Europe Catalog item prefix numbers.

HOW TO ORDER: Specify Item Number with prefix, D diameter, and L length. Include zeros and dashes but omit decimals, as shown.

Prefix: EJP-EHN - D - L

Example:
Prefix D L
EJP-EHN-030-0160

Example:
Prefix D L
EJP-EHN-120-0630

KEY TO CHART
⚡ Items in stock
Contact DME for quote

DIN PINS, SLEEVES, BLADES

DIN Ejector Pins – Hardened

DIN Ejector Pins – EJP-ELH

Expulsores I Extractores I Ejecteurs Epingles I Auswerferstifte

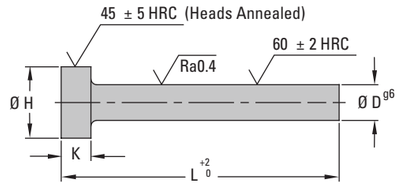

INFORMATION KEY:
D = Pin Body Diameter
H = Head Diameter
K = Head Thickness
L = Length
Standard: = DIN/ISO Type
Material: 1.2210 (AISI L2 Type) Steel
Surface Treatment: None (Through-Hardened)
Max. Temp.: 250˚C (482˚F)
Dimensions: Shown in Millimeters (mm)

ITEM PREFIX	D	H	K	L								
				0040	0080	0100	0125	0160	0200	0250	0315	0400
EJP-ELH (AH)*	01.5	3	1.5	⚡	⚡	⚡	⚡	⚡	⚡			
	01.6	3	1.5	⚡	⚡	⚡	⚡	⚡	⚡			
	01.7	3	1.5			⚡	⚡	⚡	⚡			
	01.8	3	1.5			⚡	⚡	⚡	⚡			
	02.0	4	2	⚡	⚡	⚡	⚡	⚡	⚡	⚡	⚡	
	02.2	4	2		⚡	⚡	⚡	⚡	⚡	⚡	⚡	
	02.5	5	2	⚡	⚡	⚡	⚡	⚡	⚡	⚡	⚡	
	02.7	5	2		⚡	⚡	⚡	⚡	⚡	⚡	⚡	
	03.0	6	3	⚡	⚡	⚡	⚡	⚡	⚡	⚡	⚡	⚡
	03.2	6	3		⚡	⚡	⚡	⚡	⚡	⚡	⚡	⚡
	03.5	7	3	⚡	⚡	⚡	⚡	⚡	⚡	⚡	⚡	⚡
	03.7	7	3			⚡	⚡	⚡	⚡	⚡	⚡	⚡
	04.0	8	3	⚡	⚡	⚡	⚡	⚡	⚡	⚡	⚡	⚡
	04.2	8	3		⚡	⚡	⚡	⚡	⚡	⚡	⚡	⚡
	04.5	8	3			⚡	⚡	⚡	⚡	⚡	⚡	⚡
	04.7	8	3			⚡	⚡	⚡	⚡	⚡	⚡	⚡
	05.0	10	3	⚡	⚡	⚡	⚡	⚡	⚡	⚡	⚡	⚡
	05.2	10	3		⚡	⚡	⚡	⚡	⚡	⚡	⚡	⚡
	05.5	10	3			⚡	⚡	⚡	⚡	⚡	⚡	⚡
	06.0	12	5	⚡	⚡	⚡	⚡	⚡	⚡	⚡	⚡	⚡
	06.2	12	5			⚡	⚡	⚡	⚡	⚡	⚡	⚡
	06.5	12	5			⚡	⚡	⚡	⚡	⚡	⚡	⚡
	07.0	12	5			⚡	⚡	⚡	⚡	⚡	⚡	⚡
	08.0	14	5	⚡	⚡	⚡	⚡	⚡	⚡	⚡	⚡	⚡
	08.2	14	5			⚡	⚡	⚡	⚡	⚡	⚡	⚡
	08.5	14	5			⚡	⚡	⚡	⚡	⚡	⚡	⚡
	09.0	14	5			⚡	⚡	⚡	⚡	⚡	⚡	⚡
	10.0	16	5	⚡	⚡	⚡	⚡	⚡	⚡	⚡	⚡	⚡
	10.2	16	5			⚡	⚡	⚡	⚡	⚡	⚡	⚡
	10.5	16	5			⚡	⚡	⚡	⚡	⚡	⚡	⚡
	11.0	16	5			⚡	⚡	⚡	⚡	⚡	⚡	⚡
	12.0	18	7		⚡	⚡	⚡	⚡	⚡	⚡	⚡	⚡
	12.2	18	7			⚡	⚡	⚡	⚡	⚡	⚡	⚡
	12.5	18	7			⚡	⚡	⚡	⚡	⚡	⚡	⚡
	14.0	22	7			⚡	⚡	⚡	⚡	⚡	⚡	⚡
	16.0	22	7			⚡	⚡	⚡	⚡	⚡	⚡	⚡
	18.0	24	7			⚡	⚡	⚡	⚡	⚡	⚡	⚡
	20.0	26	8			⚡	⚡	⚡	⚡	⚡	⚡	⚡

* "(AH)" is only a cross-reference to current DME Europe Catalog item prefix numbers.

HOW TO ORDER: Specify Item Number with prefix, D diameter, and L length. Include zeros and dashes but omit decimals, as shown.

Prefix D L
EJP-EHN - ▢ - ▢

Example:
Prefix D L
EJP-ELH-015-0200

Example:
Prefix D L
EJP-ELH-050-0100

KEY TO CHART
⚡ **Items in stock**
Contact DME for quote

DIN PINS, SLEEVES, BLADES

DIN Shoulder Ejector Pins – Nitrided

DIN Shoulder Ejector Pins – EJP-EHN

Expulsores con hombro I Extractores I Ejecteurs epingles I Auswerferstifte

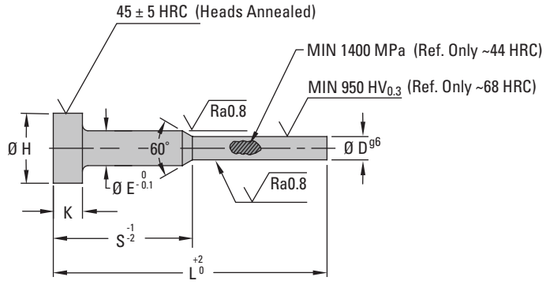

INFORMATION KEY:
D = Pin Body Diameter
E = Shoulder Diameter
H = Head Diameter
K = Head Thickness
L = Length
S = Shoulder Length
Standard: = DIN/ISO Type
Material: 1.2344 (AISI H13 Type) Steel
Surface Treatment: Nitrided
Max. Temp.: 500°-550°C (932°-1022°F)
Dimensions: Shown in Millimeters (mm)

ITEM PREFIX	D	E	H	K	L						
					0080	0100	0125	0160	0160	0200	0250
					S						
					0035	0050	0050	0050	0075	0075	0075
EJP-EHN (C)*	00.7	2	4	2		⚡	⚡				
	00.8	2	4	2	⚡	⚡	⚡		⚡		
	00.9	2	4	2	⚡	⚡	⚡		⚡		
	01.0	2	4	2	⚡	⚡	⚡	⚡	⚡	⚡	
	01.1	2	4	2	⚡	⚡	⚡		⚡	⚡	
	01.2	2	4	2	⚡	⚡	⚡		⚡	⚡	
	01.3	2	4	2	⚡	⚡	⚡		⚡	⚡	
	01.4	2	4	2	⚡	⚡	⚡		⚡	⚡	
	01.5	3	6	3	⚡	⚡	⚡	⚡	⚡	⚡	⚡
	01.6	3	6	3	⚡	⚡	⚡		⚡	⚡	
	01.7	3	6	3	⚡	⚡	⚡		⚡	⚡	
	01.8	3	6	3	⚡	⚡	⚡		⚡	⚡	
	01.9	3	6	3	⚡	⚡	⚡		⚡	⚡	
	02.0	3	6	3	⚡	⚡	⚡	⚡	⚡	⚡	⚡
	02.1	3	6	3	⚡	⚡	⚡		⚡	⚡	
	02.2	3	6	3	⚡	⚡	⚡		⚡	⚡	
	02.4	3	6	3	⚡	⚡	⚡		⚡	⚡	
	02.5	3	6	3		⚡	⚡		⚡	⚡	⚡
	02.7	3	6	3		⚡	⚡		⚡	⚡	
	03.0	4	8	3		⚡	⚡		⚡	⚡	
	03.2	4	8	3		⚡	⚡		⚡	⚡	
	03.5	4	8	3		⚡	⚡		⚡	⚡	

* "(C)" is only a cross-reference to current DME Europe Catalog item prefix numbers.

HOW TO ORDER: Specify Item Number with prefix, D diameter, L length, and S length. Include zeros and dashes but omit decimals, as shown.

Prefix D L S
EJP-EHN - ▢ - ▢ - ▢

Example:
Prefix D L S
EJP-EHN-010-0160-0050

Example:
Prefix D L S
EJP-EHN-025-0200-0075

KEY TO CHART
⚡ **Items in stock**
Contact DME for quote

DIN PINS, SLEEVES, BLADES

DIN Shoulder Ejector Pins – Hardened

DIN Shoulder Ejector Pins – EJP-ELH

Expulsores con hombro I Extractores I Ejecteurs epingles I Auswerferstifte

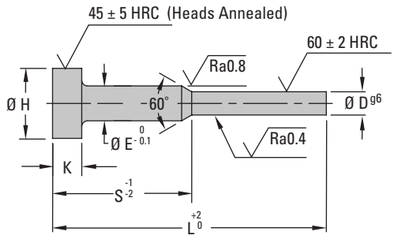

INFORMATION KEY:
D = Pin Body Diameter
E = Shoulder Diameter
H = Head Diameter
K = Head Thickness
L = Length
S = Shoulder Length
Standard: = DIN/ISO Type
Material: 1.2210 (AISI L2 Type) Steel
Surface Treatment: None (Through-Hardened)
Max. Temp.: 250˚C (482˚F)
Dimensions: Shown in Millimeters (mm)

ITEM PREFIX	D	E	H	K	L				
					0080	0100	0125	0200	0250
					S				
					0035	0050	0050	0075	0100
EJP-ELH (CH)*	00.8	2	4	2	⚡	⚡	⚡	⚡	
	00.9	2	4	2	⚡	⚡	⚡	⚡	
	01.0	2	4	2	⚡	⚡	⚡	⚡	
	01.1	2	4	2	⚡	⚡	⚡	⚡	
	01.2	2	4	2	⚡	⚡	⚡	⚡	
	01.3	2	4	2	⚡	⚡	⚡	⚡	
	01.4	2	4	2	⚡	⚡	⚡	⚡	
	01.5	3	6	3	⚡	⚡	⚡	⚡	
	01.6	3	6	3	⚡	⚡	⚡	⚡	
	01.7	3	6	3	⚡	⚡	⚡	⚡	
	01.8	3	6	3	⚡	⚡	⚡	⚡	
	01.9	3	6	3	⚡	⚡	⚡	⚡	
	02.0	3	6	3	⚡	⚡	⚡	⚡	⚡
	02.1	3	6	3	⚡	⚡	⚡	⚡	
	02.2	3	6	3	⚡	⚡	⚡	⚡	
	02.3	3	6	3	⚡		⚡	⚡	
	02.4	3	6	3	⚡	⚡	⚡	⚡	
	02.5	3	6	3		⚡		⚡	

* "(CH)" is only a cross-reference to current DME Europe Catalog item prefix numbers.

HOW TO ORDER: Specify Item Number with prefix, D diameter, L length and S length. Include zeros and dashes but omit decimals, as shown.

Prefix EJP-EHN - D - L - S

Example: Prefix D L S EJP-ELH-010-0100-0050

Example: Prefix D L S EJP-ELH-025-0125-0050

KEY TO CHART
⚡ **Items in stock**
Contact DME for quote

DME

DIN PINS, SLEEVES, BLADES

DIN Ejector Sleeves – Nitrided

DIN Ejector Sleeves – EJS-EHN

Mangas expulsoras I Extractores tubulares I Ejecteurs tubulaires I Auswerferhülsen

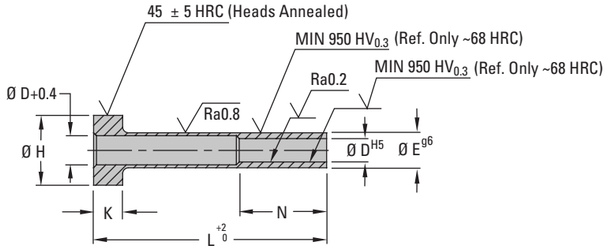

INFORMATION KEY:
D = Inside Diameter
E = Outside Diameter
H = Head Diameter
K = Head Thickness
L = Length
N = Bearing Length
Standard: = DIN/ISO Type
Material: 1.2344 (AISI H13 Type) Steel
Surface Treatment: Nitrided
Max. Temp.: 500°-550°C (932°-1022°F)
Dimensions: Shown in Millimeters (mm)

ITEM PREFIX	D	E	H	K	N	L										
						0075	0100	0125	0150	0175	0200	0225	0250	0275	0300	0350
EJS-EHN (S)*	01.5	03.0	6	3	35	⚡	⚡	⚡	⚡							
	01.7	03.0	6	3	35	⚡	⚡	⚡	⚡							
	02.0	04.0	8	3	35	⚡	⚡	⚡	⚡	⚡	⚡					
	02.2	04.0	8	3	35	⚡	⚡	⚡	⚡	⚡	⚡					
	02.5	05.0	10	3	35	⚡	⚡	⚡	⚡	⚡	⚡	⚡	⚡			
	02.7	05.0	10	3	45	⚡	⚡	⚡	⚡	⚡	⚡	⚡	⚡			
	03.0	05.0	10	3	45	⚡	⚡	⚡	⚡	⚡	⚡	⚡	⚡			
	03.2	05.0	10	3	45	⚡	⚡	⚡	⚡	⚡	⚡	⚡	⚡			
	03.5	06.0	12	5	45	⚡	⚡	⚡	⚡	⚡	⚡	⚡	⚡			
	04.0	06.0	12	5	45	⚡	⚡	⚡	⚡	⚡	⚡	⚡	⚡			
	04.2	08.0	14	5	45	⚡	⚡	⚡	⚡	⚡	⚡	⚡	⚡			
	04.5	08.0	14	5	45	⚡	⚡	⚡	⚡	⚡	⚡	⚡	⚡			
	05.0	08.0	14	5	45	⚡	⚡	⚡	⚡	⚡	⚡	⚡	⚡			
	05.2	08.0	14	5	45	⚡	⚡	⚡	⚡	⚡	⚡	⚡	⚡			
	06.0	10.0	16	5	45	⚡	⚡	⚡	⚡	⚡	⚡	⚡	⚡			
	06.2	10.0	16	5	45	⚡	⚡	⚡	⚡	⚡	⚡	⚡	⚡			
	06.5	10.0	16	5	45		⚡	⚡								
	08.0	12.0	20	7	45	⚡	⚡	⚡	⚡	⚡	⚡	⚡	⚡	⚡	⚡	⚡
	08.2	12.0	20	7	45	⚡	⚡	⚡	⚡	⚡	⚡	⚡	⚡	⚡	⚡	⚡
	08.5	12.0	20	7	45	⚡	⚡	⚡	⚡		⚡	⚡	⚡	⚡	⚡	
	10.0	14.0	22	7	45		⚡	⚡	⚡	⚡	⚡	⚡	⚡	⚡	⚡	⚡
	10.5	14.0	22	7	45		⚡	⚡	⚡	⚡	⚡	⚡	⚡	⚡	⚡	⚡
	11.0	14.0	22	7	45		⚡	⚡	⚡	⚡	⚡	⚡	⚡	⚡	⚡	⚡
	12.0	16.0	22	7	45		⚡	⚡	⚡	⚡	⚡	⚡	⚡	⚡	⚡	
	12.5	16.0	22	7	45		⚡	⚡	⚡	⚡	⚡	⚡	⚡	⚡	⚡	⚡
	14.0	18.0	24	9	45		⚡	⚡	⚡	⚡	⚡	⚡	⚡	⚡	⚡	⚡
	16.0	20.0	26	9	50			⚡	⚡	⚡	⚡	⚡	⚡	⚡	⚡	⚡
	18.0	22.0	28	9	50	⚡	⚡	⚡	⚡		⚡	⚡	⚡	⚡	⚡	⚡

* "(S)" is only a cross-reference to current DME Europe Catalog item prefix numbers.

HOW TO ORDER: Specify Item Number with prefix, D diameter, and L length. Include zeros and dashes but omit decimals, as shown.

Prefix EJP-EHN - D - L

Example: Prefix D L EJS-EHN-020-0075

Example: Prefix D L EJS-EHN-120-0250

KEY TO CHART
⚡ **Items in stock**
Contact DME for quote

DIN PINS, SLEEVES, BLADES

DIN Ejector Sleeves – Hardened

DIN Ejector Sleeves – EJS-ELH

Mangas expulsoras I Extractores tubulares I Ejecteurs tubulaires I Auswerferhülsen

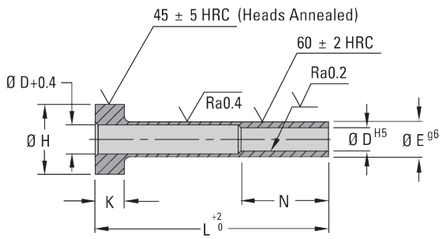

INFORMATION KEY:
D = Inside Diameter
E = Outside Diameter
H = Head Diameter
K = Head Thickness
L = Length
N = Bearing Length
Standard: DIN/ISO Type
Material: 1.2210 (AISI L2 Type) Steel
Surface Treatment: None (Through-Hardened)
Max. Temp.: 250°C (482°F)
Dimensions: Shown in Millimeters (mm)

ITEM PREFIX	D	E	H	K	N	L												
						0075	0100	0125	0150	0175	0200	0225	0250	0275	0300	0350	0400	0450	0500
EJS-ELH (KS)*	01.5	03.0	6	3	30	⚡	⚡	⚡	⚡		⚡		⚡						
	01.7	03.0	6	3	30	⚡	⚡	⚡	⚡										
	02.0	04.0	8	3	35	⚡	⚡	⚡	⚡	⚡	⚡	⚡	⚡						
	02.2	04.0	8	3	35	⚡	⚡	⚡	⚡	⚡	⚡	⚡							
	02.5	05.0	10	3	35	⚡	⚡	⚡	⚡	⚡	⚡	⚡	⚡	⚡					
	02.7	05.0	10	3	45	⚡	⚡	⚡	⚡	⚡	⚡	⚡	⚡	⚡					
	03.0	05.0	10	3	45	⚡	⚡	⚡	⚡	⚡	⚡	⚡	⚡	⚡					
	03.2	05.0	10	3	45	⚡	⚡	⚡	⚡	⚡									
	03.5	06.0	12	5	45	⚡	⚡	⚡	⚡	⚡	⚡	⚡	⚡	⚡	⚡				
	03.7	06.0	12	5	45	⚡	⚡	⚡	⚡	⚡	⚡	⚡	⚡	⚡	⚡				
	04.0	06.0	12	5	45	⚡	⚡	⚡	⚡	⚡	⚡	⚡	⚡	⚡	⚡	⚡	⚡		
	04.2	08.0	14	5	45	⚡	⚡	⚡	⚡	⚡	⚡	⚡	⚡	⚡	⚡				
	04.5	08.0	14	5	45	⚡	⚡	⚡	⚡		⚡	⚡	⚡						
	05.0	08.0	14	5	45	⚡	⚡	⚡	⚡	⚡	⚡	⚡	⚡	⚡	⚡	⚡			
	05.2	08.0	14	5	45	⚡	⚡	⚡	⚡	⚡	⚡	⚡	⚡	⚡	⚡				
	05.5	08.0	14	5	45	⚡	⚡	⚡	⚡		⚡	⚡	⚡	⚡	⚡				
	06.0	10.0	16	5	45	⚡	⚡	⚡	⚡	⚡	⚡	⚡	⚡	⚡	⚡	⚡			
	06.2	10.0	16	5	45	⚡	⚡	⚡	⚡	⚡	⚡	⚡	⚡	⚡	⚡	⚡			
	06.5	10.0	16	5	45	⚡	⚡	⚡	⚡	⚡	⚡	⚡	⚡	⚡	⚡	⚡			
	08.0	12.0	20	7	45	⚡	⚡	⚡	⚡	⚡	⚡	⚡	⚡	⚡	⚡	⚡	⚡		
	08.2	12.0	20	7	45	⚡	⚡	⚡	⚡	⚡	⚡	⚡	⚡	⚡	⚡	⚡	⚡		
	08.5	12.0	20	7	45	⚡	⚡	⚡	⚡	⚡	⚡	⚡	⚡	⚡	⚡	⚡	⚡	⚡	
	10.0	14.0	22	7	45	⚡	⚡	⚡	⚡	⚡	⚡	⚡	⚡	⚡	⚡	⚡	⚡	⚡	
	10.5	14.0	22	7	45	⚡	⚡	⚡	⚡	⚡	⚡	⚡	⚡	⚡	⚡	⚡	⚡	⚡	
	11.0	14.0	22	7	45	⚡	⚡	⚡	⚡	⚡	⚡	⚡	⚡	⚡	⚡	⚡	⚡	⚡	
	12.0	16.0	22	7	45	⚡	⚡	⚡	⚡	⚡	⚡	⚡	⚡	⚡	⚡	⚡	⚡	⚡	⚡
	12.5	16.0	22	7	45	⚡	⚡	⚡	⚡	⚡	⚡	⚡	⚡	⚡	⚡	⚡	⚡	⚡	⚡
	14.0	18.0	24	9	45	⚡	⚡	⚡	⚡		⚡	⚡	⚡	⚡	⚡	⚡	⚡	⚡	
	16.0	20.0	26	9	50	⚡	⚡	⚡	⚡		⚡	⚡	⚡	⚡	⚡				
	18.0	22.0	28	9	50	⚡	⚡	⚡	⚡		⚡	⚡	⚡	⚡	⚡				

* "(KS)" is only a cross-reference to current DME Europe Catalog item prefix numbers.

HOW TO ORDER: Specify Item Number with prefix, D diameter, and L length. Include zeros and dashes but omit decimals, as shown.

Prefix: EJS-ELH - D - L

Example: Prefix D L — EJS-ELH-020-0125

Example: Prefix D L — EJS-ELH-120-0150

KEY TO CHART
⚡ **Items in stock**
Contact DME for quote

DME

DIN PINS, SLEEVES, BLADES

DIN Ejector Blades – Nitrided

DIN Ejector Blades – EJB-EHN

Expulsores planos I Extractores laminares I Ejecteurs lames I Auswerferklingen

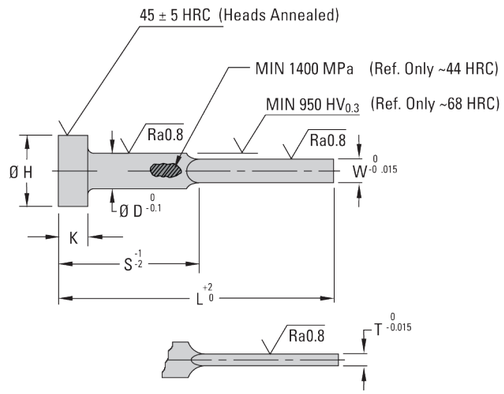

INFORMATION KEY:
D = Shoulder Diameter
H = Head Diameter
K = Head Thickness
L = Length
S = Shoulder Length
T = Blade Thickness
W = Blade Width
Standard: DIN/ISO Type
Material: 1.2344 (AISI H13 Type) Steel
Surface Treatment: Nitrided
Max. Temp.: 500°-550°C (932°-1022°F)
Dimensions: Shown in Millimeters (mm)

ITEM PREFIX	T	W	D	H	K	L								
						0060	0080	0100	0125	0160	0200	0250	0315	0400
						S								
						30	40	50	63	80	100	125	160	200
EJB-EHN (FW)*	01.0	03.5	4	8	3	⚡	⚡	⚡	⚡					
	01.0	03.8	4.2	8	3	⚡	⚡	⚡	⚡	⚡				
	01.0	04.5	5	10	3		⚡	⚡	⚡	⚡				
	01.0	05.5	6	12	5		⚡	⚡	⚡	⚡				
	01.2	03.8	4.2	8	3		⚡	⚡	⚡	⚡				
	01.2	04.5	5	10	3		⚡	⚡	⚡	⚡				
	01.2	05.5	6	12	5		⚡	⚡	⚡	⚡				
	01.2	07.5	8	14	5			⚡	⚡	⚡	⚡			
	01.5	04.5	5	10	3		⚡	⚡	⚡	⚡	⚡			
	01.5	05.5	6	12	5			⚡	⚡	⚡	⚡			
	01.5	07.5	8	14	5				⚡	⚡	⚡	⚡		
	01.5	09.5	10	16	5					⚡	⚡	⚡	⚡	
	02.0	05.5	6	12	5				⚡	⚡	⚡	⚡		
	02.0	07.5	8	14	5					⚡	⚡	⚡	⚡	
	02.0	09.5	10	16	5						⚡	⚡	⚡	⚡
	02.0	11.5	12	18	7						⚡	⚡	⚡	⚡
	02.0	15.5	16	22	7						⚡	⚡	⚡	⚡
	02.5	11.5	12	18	7						⚡	⚡	⚡	⚡
	02.5	15.5	16	22	7						⚡	⚡	⚡	⚡

* "(FW)" is only a cross-reference to current DME Europe Catalog item prefix numbers.

HOW TO ORDER: Specify Item Number with prefix, T thickness, W width, and L length. Include zeros and dashes but omit decimals, as shown.

Prefix: EJP-EHN - T - W - L

Example: Prefix T W L — EJB-EHN-010-038-0125

Example: Prefix T W L — EJB-EHN-020-115-0200

KEY TO CHART
⚡ **Items in stock**
Contact DME for quote

DIN PINS, SLEEVES, BLADES

DIN Ejector Blades – Hardened

DIN Ejector Blades – EJB-ELH

Expulsores planos I Extractores laminares I Ejecteurs lames I Auswerferklingen

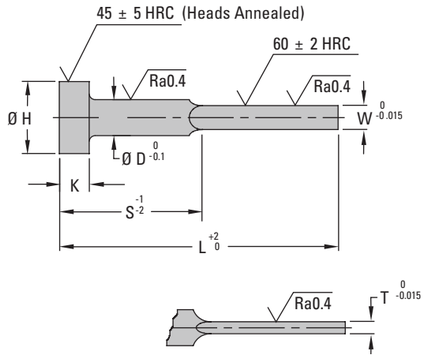

INFORMATION KEY:
D = Shoulder Diameter
H = Head Diameter
K = Head Thickness
L = Length
S = Shoulder Length
T = Blade Thickness
W = Blade Width
Standard: DIN/ISO Type
Material: 1.2210 (AISI L2 Type) Steel
Surface Treatment: None (Through-Hardened)
Max. Temp.: 250°C (482°F)
Dimensions: Shown in Millimeters (mm)

ITEM PREFIX	T	W	D	H	K	L								
						0060	0080	0100	0125	0160	0200	0250	0315	0400
						S								
						30	40	50	63	80	100	125	160	200
EJB-ELH (FK)*	01.0	03.5	4	8	3	⚡	⚡	⚡						
	01.0	03.8	4.2	8	3	⚡	⚡	⚡	⚡	⚡				
	01.0	04.5	5	10	3		⚡	⚡	⚡	⚡	⚡			
	01.0	05.5	6	12	5		⚡	⚡	⚡	⚡	⚡			
	01.2	03.8	4.2	8	3		⚡	⚡	⚡	⚡				
	01.2	04.5	5	10	3		⚡	⚡	⚡	⚡	⚡			
	01.2	05.5	6	12	5		⚡	⚡	⚡	⚡	⚡			
	01.2	07.5	8	14	5			⚡	⚡	⚡	⚡			
	01.5	04.5	5	10	3			⚡	⚡	⚡	⚡			
	01.5	05.5	6	12	5			⚡	⚡	⚡	⚡			
	01.5	07.5	8	14	5				⚡	⚡	⚡	⚡		
	01.5	09.5	10	16	5					⚡	⚡	⚡	⚡	
	02.0	05.5	6	12	5				⚡	⚡	⚡			
	02.0	07.5	8	14	5					⚡	⚡	⚡		
	02.0	09.5	10	16	5						⚡	⚡	⚡	
	02.0	11.5	12	18	7						⚡	⚡	⚡	
	02.0	15.5	16	22	7						⚡	⚡	⚡	⚡
	02.5	11.5	12	18	7						⚡	⚡	⚡	
	02.5	15.5	16	22	7						⚡	⚡	⚡	⚡

* "(FK)" is only a cross-reference to current DME Europe Catalog item prefix numbers.

HOW TO ORDER: Specify Item Number with prefix, T thickness, W width, and L length. Include zeros and dashes but omit decimals, as shown.

Prefix: EJP-ELH - T - W - L

Example: Prefix T W L — EJB-ELH-010-035-0060

Example: Prefix T W L — EJB-ELH-020-115-0200

KEY TO CHART
⚡ Items in stock
Contact DME for quote

DME

DIN PINS, SLEEVES, BLADES

DIN Core Pins – Hardened

DIN Core Pins – CRP-EHH

Pernos moldeadores I Pernos moldantes I Epingles au centre I Kernstifte

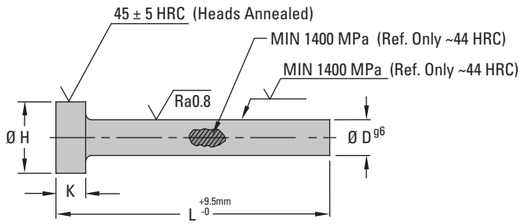

INFORMATION KEY:
D = Pin Body Diameter
H = Head Diameter
K = Head Thickness
L = Length
Standard: DIN/ISO Type
Material: 1.2344 (AISI H13 Type) Steel
Surface Treatment: None (Through-Hardened)
Max. Temp.: 500°-550°C (932°-1022°F)
Dimensions: Shown in Millimeters (mm)

ITEM PREFIX	D	H	K	L										
				0080	0100	0125	0160	0200	0250	0315	0400	0500	0630	0800	1000
CRP-EHH (AHX)*	02.0	4	2		⚡			⚡							
	02.2	4	2												
	02.5	5	2												
	02.7	5	2												
	03.0	6	3		⚡			⚡							
	03.2	6	3												
	03.5	7	3												
	03.7	7	3												
	04.0	8	3		⚡			⚡		⚡					
	04.2	8	3												
	04.5	8	3												
	05.0	10	3		⚡			⚡			⚡				
	05.2	10	3												
	05.5	10	3												
	06.0	12	5		⚡			⚡			⚡				
	06.2	12	5												
	06.5	12	5												
	07.0	12	5												
	08.0	14	5		⚡			⚡			⚡				
	08.2	14	5												
	08.5	14	5												
	09.0	14	5												
	10.0	16	5					⚡			⚡				
	10.2	16	5												
	10.5	16	5												
	11.0	16	5												
	12.0	18	7					⚡			⚡				
	12.2	18	7												
	12.5	18	7												
	14.0	22	7												
	16.0	22	7								⚡		⚡		
	18.0	24	7												
	20.0	26	8								⚡		⚡		
	25.0	32	10								⚡		⚡		
	32.0	40	10												

* "(AHX)" is only a cross-reference to current DME Europe Catalog item prefix numbers.

HOW TO ORDER: Specify Item Number with prefix, D diameter, and L length. Include zeros and dashes but omit decimals, as shown.

Prefix: CRP-EHH - D - L

Example: Prefix D L — CRP-EHH-020-0200

Example: Prefix D L — CRP-EHH-250-0315

KEY TO CHART
⚡ Items in stock
2-3 week delivery
Contact DME for quote

DIN PINS, SLEEVES, BLADES

DIN Core Pins – Copper-Based Alloy

DIN Core Pins – CRP-ECS

Pernos moldeadores | Pernos moldantes | Epingles au centre | Kernstifte

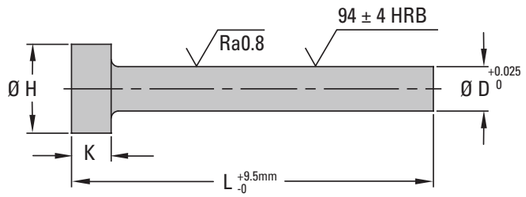

INFORMATION KEY:
D = Pin Body Diameter
H = Head Diameter
K = Head Thickness
L = Length
Standard: DIN/ISO Type
Material: Beryllium-free Copper based alloy
Surface Treatment: None
Max. Temp.: 350°C (662°F)
Dimensions: Shown in Millimeters (mm)

ITEM PREFIX	D	H	K	L				
				0100	0160	0200	0250	0315
CRP-ECS (PCM)*	01.5	3	1.5					
	02.0	4	2					
	02.5	5	2					
	03.0	6	3					
	03.5	7	3					
	04.0	8	3		⚡	⚡		⚡
	04.5	8	3			⚡		
	05.0	10	3		⚡	⚡		⚡
	06.0	12	5		⚡	⚡		⚡
	07.0	12	5					
	08.0	14	5		⚡	⚡		⚡
	10.0	16	5		⚡			⚡
	12.0	18	7			⚡		⚡
	14.0	22	7			⚡		
	16.0	22	7			⚡		

* "(PCM)" is only a cross-reference to current DME Europe Catalog item prefix numbers.

High Thermal Conductivity Pins

Advantages:

- Reduced cycle time
- 5 times better conductivity than steel
- Improved part quality
- Lower machining costs
- Longer service life

HOW TO ORDER: Specify Item Number with prefix, D diameter, and L length. Include zeros and dashes but omit decimals, as shown.

Prefix: CRP-ECS - D: ____ - L: ____

Example: Prefix D L — CRP-ECS-030-0160

Example: Prefix D L — CRP-ECS-120-0315

KEY TO CHART
⚡ Items in stock
2-3 week delivery
Contact DME for quote

DIN PINS, SLEEVES, BLADES

Special DIN Pins and Sleeves – Faxable Quote Form

QUOTE FAX HOTLINES AVAILABLE or visit https://www.dme.net/request-quote/
United States: 888-808-4363 • Canada: 800-461-9965 • International: 248-398-7394

Special Pins

Quantity:_____
Type of Pin: _____ (specify item prefix)
Material:
☐ 1.2344 (AISI H13 Type) Steel
☐ 1.2210 (AISI L2 Type) Steel
☐ Other_____
Hardness:
☐ Standard (as specified by item prefix)
☐ Other _____ HRC (specify)
Nitrided: ☐ Yes ☐ No
Heads are Annealed (unless otherwise specified) _____
Desired Delivery: _____
Tolerances:
☐ As indicated in item drawing
☐ Other (specify on drawing)

Special Sleeves

Quantity:_____
Type of Sleeve: _____ (specify item prefix)
Material:
☐ 1.2344 (AISI H13 Type) Steel
☐ 1.2210 (AISI L2 Type) Steel
☐ Other_____
Hardness:
☐ Standard (as specified by item prefix)
☐ Other _____ HRC (specify)
Nitrided O.D.: ☐ Yes ☐ No
Nitrided I.D.: ☐ Yes ☐ No
Heads are Annealed
Desired Delivery: _____
Tolerances:
☐ As indicated in item drawing
☐ Other (specify on drawing)

Straight Pin

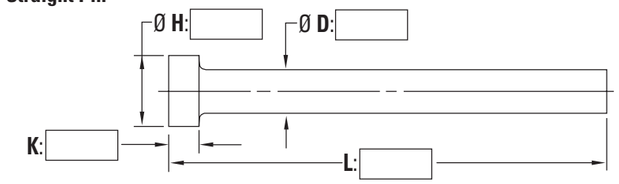

Step Pin

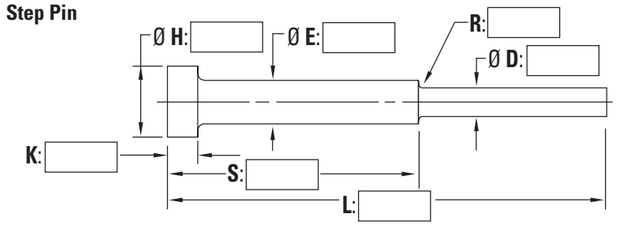

Sleeve

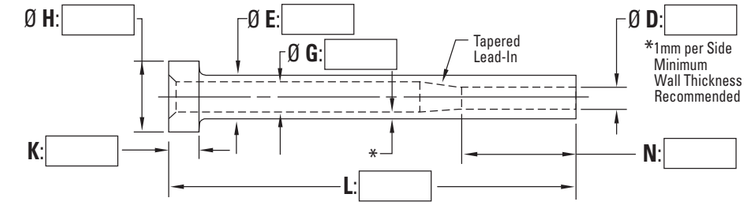

Step Sleeve

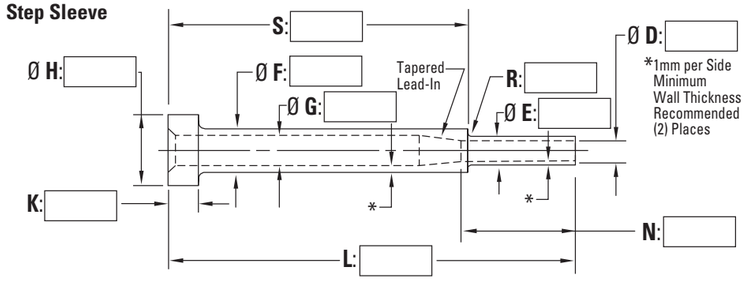

Company name: _____ **DME account #:** _____
Contact name: _____ **P.O.#:** _____
Phone: _____ **FAX:** _____
Address: _____ **E-mail:** _____
City: _____ **State/Province:** _____
ZIP/Postal Code: _____ **Country:** _____

Shipping method:
☐ UPS Ground
☐ UPS 2nd Day Air
☐ UPS Next Day
☐ FedEx
☐ Other _____



DME JIS PINS, SLEEVES, BLADES

A COMPREHENSIVE LINE OF JIS EJECTOR PRODUCTS

Table of Contents

JIS EJECTOR PINS STRAIGHT EJECTOR PINS. 349

JIS EJECTOR BLADES EJECTOR BLADES 350

JIS EJECTOR SLEEVES EJECTOR SLEEVES 351-353

JIS PINS, SLEEVES, BLADES

JIS Ejector Pins – Straight

JIS Ejector Pins – JFX

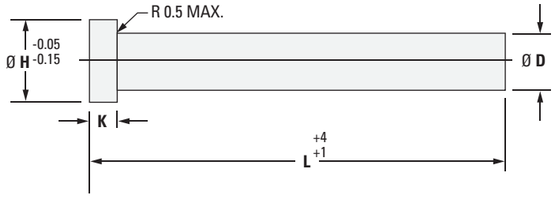

INFORMATION KEY:
D = Pin Body Diameter
H = Head Diameter
K = Head Thickness
L = Length
Standard: JIS
Material: SKD61 (H-13)
Surface Treatment: Nitrided
Surface Hardness: 70-72 Rc (HV 1000 ± 100)
Core Hardness: 40 HRC±2

Ø D PIN DIA	Ø H HEAD DIA	K HEAD THK	ITEM NUMBER (LENGTH L)										
			L=100	L=150	L=200	L=250	L=300	L=350	L=400	L=450	L=500	L=550	L=600
1.0	5	4	JFX010100	JFX010150									
1.5	5	4	JFX015100	JFX015150	JFX015200								
2	5	4	JFX020100	JFX020150	JFX020200	JFX020250							
2.5	6	4	JFX025100	JFX025150	JFX025200	JFX025250	JFX025300	JFX025350	JFX025400	JFX025450	JFX025500	JFX025550	JFX025600
3	6	4	JFX030100	JFX030150	JFX030200	JFX030250	JFX030300	JFX030350	JFX030400	JFX030450	JFX030500	JFX030550	JFX030600
3.5	7	4	JFX035100	JFX035150	JFX035200	JFX035250	JFX035300	JFX035350	JFX035400	JFX035450	JFX035500	JFX035550	JFX035600
4	8	6	JFX040100	JFX040150	JFX040200	JFX040250	JFX040300	JFX040350	JFX040400	JFX040450	JFX040500	JFX040550	JFX040600
4.5	8	6	JFX045100	JFX045150	JFX045200	JFX045250	JFX045300	JFX045350	JFX045400	JFX045450	JFX045500	JFX045550	JFX045600
5	9	6	JFX050100	JFX050150	JFX050200	JFX050250	JFX050300	JFX050350	JFX050400	JFX050450	JFX050500	JFX050550	JFX050600
5.5	10	6	JFX055100	JFX055150	JFX055200	JFX055250	JFX055300	JFX055350	JFX055400	JFX055450	JFX055500	JFX055550	JFX055600
6	10	6	JFX060100	JFX060150	JFX060200	JFX060250	JFX060300	JFX060350	JFX060400	JFX060450	JFX060500	JFX060550	JFX060600
6.5	11	6	JFX065100	JFX065150	JFX065200	JFX065250	JFX065300	JFX065350	JFX065400	JFX065450	JFX065500	JFX065550	JFX065600
7	11	6	JFX070100	JFX070150	JFX070200	JFX070250	JFX070300	JFX070350	JFX070400	JFX070450	JFX070500	JFX070550	JFX070600
8	13	8	JFX080100	JFX080150	JFX080200	JFX080250	JFX080300	JFX080350	JFX080400	JFX080450	JFX080500	JFX080550	JFX080600
9	15	8	JFX090100	JFX090150	JFX090200	JFX090250	JFX090300	JFX090350	JFX090400	JFX090450	JFX090500		
10	15	8	JFX100100	JFX100150	JFX100200	JFX100250	JFX100300	JFX100350	JFX100400	JFX100450	JFX100500	JFX100550	JFX100600
12	17	8	JFX120100	JFX120150	JFX120200	JFX120250	JFX120300	JFX120350	JFX120400	JFX120450	JFX120500	JFX120550	JFX120600
15	20	8	JFX150100	JFX150150	JFX150200	JFX150250	JFX150300	JFX150350	JFX150400	JFX150450	JFX150500	JFX150550	JFX150600

Ø D PIN DIA	Ø H HEAD DIA	K HEAD THK	ITEM NUMBER (LENGTH L)						
			L=650	L=700	L=750	L=800	L=900	L=1000	L=1200
2.5	6	4	JFX025650						
3	6	4	JFX030650	JFX030700					
3.5	7	4	JFX035650	JFX035700	JFX035750				
4	8	6	JFX040650	JFX040700	JFX040750				
4.5	8	6	JFX045650	JFX045700	JFX045750				
5	9	6	JFX050650	JFX050700	JFX050750				
6	10	6	JFX060650	JFX060700	JFX060750	JFX060800			
7	11	6	JFX070650	JFX070700	JFX070750	JFX070800			
8	13	8	JFX080650	JFX080700	JFX080750	JFX080800	JFX080900	JFX0801000	JFX0801200
10	15	8	JFX100650	JFX100700	JFX100750	JFX100800	JFX100900	JFX1001000	JFX1001200
12	17	8	JFX120650	JFX120700	JFX120750	JFX120800	JFX120900	JFX1201000	JFX1201200
15	20	8	JFX150650	JFX150700	JFX150750	JFX150800	JFX150900	JFX1501000	JFX1501200

NOTE: All dimensions are in mm.

JIS TOLERANCES		
PIN DIA Ø D	Ø D	TOL
	1.0 1.5	-0.005 -0.012
	2 TO 15	-0.01 -0.02
HEAD THICK K	THI	TOL
	4	0 -0.020
	6 TO 8	0 -0.030

KEY TO CHART
Items in stock
Contact DME for quote

HOW TO ORDER: Use Item Number in charts above for ordering.

JIS PINS, SLEEVES, BLADES

JIS Ejector Blades

JIS Ejector Blades – JEB

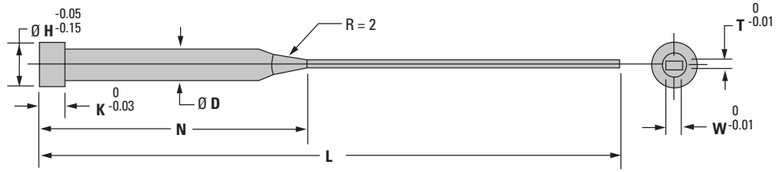

K HEAD THICK	Ø H HEAD DIA	Ø D PIN DIA	W BLADE WIDTH	T BLADE THICK	ITEM NUMBER (LENGTH L)			
					L=100 N=40	L=125 N=50	L=150 N=60	L=175 N=70
4	5	2	1.2	0.4	JEB120402	JEB120403		
			1.5	0.4	JEB150402	JEB150403		
				0.5	JEB150502	JEB150503		
	6	2.5	2	0.4	JEB200402	JEB200403		
				0.5	JEB200502	JEB200503		
				0.6	JEB200602	JEB200603		
	7	3.5	3	0.6	JEB350602	JEB350603	JEB350604	
				0.8	JEB350802	JEB350803	JEB350804	
				1.0	JEB351002	JEB351003	JEB351004	
				1.2	JEB351202	JEB351203	JEB351204	
6	8	4		0.6	JEB300602	JEB300603	JEB300604	
				0.8	JEB300802	JEB300803	JEB300804	
				1.0	JEB301002	JEB301003	JEB301004	
				1.2	JEB301202	JEB301203	JEB301204	
	9	5	4	0.8	JEB400802	JEB400803	JEB400804	JEB400805
				1.0	JEB401002	JEB401003	JEB401004	JEB401005
				1.2		JEB401203	JEB401204	JEB401205
				1.5		JEB401503	JEB401504	JEB401505
	10	6	5	0.8		JEB500803	JEB500804	JEB500805
				1.0		JEB501003	JEB501004	JEB501005
				1.2		JEB501203	JEB501204	JEB501205
				1.5		JEB501503	JEB501504	JEB501505
				1.8		JEB501803	JEB501804	JEB501805
				2.0		JEB502003	JEB502004	JEB502005
	11	7	6	0.8		JEB600803	JEB600804	JEB600805
				1.0		JEB601003	JEB601004	JEB601005
				1.2		JEB601203	JEB601204	JEB601205
				1.5		JEB601503	JEB601504	JEB601505
				1.8		JEB601803	JEB601804	JEB601805
				2.0		JEB602003	JEB602004	JEB602005
8	15	10	8	0.8		JEB800803	JEB800804	JEB800805
				1.0		JEB801003	JEB801004	JEB801005
				1.2		JEB801203	JEB801204	JEB801205
				1.5		JEB801503	JEB801504	JEB801505
				1.8		JEB801803	JEB801804	JEB801805
				2.0		JEB802003	JEB802004	JEB802005
	17	12	10	1.0			JEB101004	JEB101005
				1.2			JEB101204	JEB101205
				1.5			JEB101504	JEB101505
				1.8			JEB101804	JEB101805
				2.0			JEB102004	JEB102005

ITEM NUMBER (LENGTH L)		
L=200 N=80	L=250 N=100	L=300 N=120
JEB500806		
JEB501006		
JEB501206		
JEB501506		
JEB501806		
JEB502006		
JEB600806		
JEB601006		
JEB601206		
JEB601506		
JEB601806		
JEB602006		
JEB800806	JEB800808	
JEB801006	JEB801008	JEB801010
JEB801206	JEB801208	JEB801210
JEB801506	JEB801508	JEB801510
JEB801806	JEB801808	JEB801810
JEB802006	JEB802008	JEB802010
JEB101006	JEB101008	JEB101010
JEB101206	JEB101208	JEB101210
JEB101506	JEB101508	JEB101510
JEB101806	JEB101808	JEB101810
JEB102006	JEB102008	JEB102010

INFORMATION KEY:

D = Pin Body Diameter
H = Head Diameter
K = Head Thickness
L = Length
N = ID Bearing Length
T = Blade Thickness
W = Blade Width
Material: SKS21
Surface Treatment: Nitrided
Surface Hardness: 58 HRC ±2

All items standard 3-week delivery.
Expedited delivery available.

JIS TOLERANCES		
Ø D PIN DIA	Ø D	TOL
	2 TO 2.5	-0.008 -0.018
	3.5 TO 5	-0.010 -0.020
	6 TO 7	-0.015 -0.025
	10 TO 12	-0.020 -0.030

NOTE: All dimensions are in mm.

HOW TO ORDER: Use Item Number in charts above for ordering.

JIS PINS, SLEEVES, BLADES

JIS Ejector Sleeves

JIS Ejector Sleeves – JES

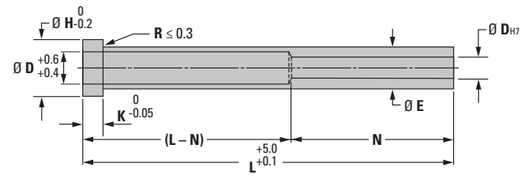

INFORMATION KEY:

D = Pin Inner Diameter
E = Pin Body Diameter
H = Head Diameter
K = Head Thickness
L = Length
N = Bearing Length
Standard: JIS
Material: SKD61
Surface Treatment: Nitrided
Surface Hardness: 900 HV~
Core Hardness: 38-42 HRC

NOTE: All dimensions are in mm.

E TOLERANCE	
E ≤ 10.0	E ≥ 12.0
-0.01 -0.02	-0.01 -0.03

DH7 TOLERANCE			
D ≤ 3.0	3.5 ≤ D ≤ 6.0	6.5 ≤ D ≤ 10.0	D ≥ 12.0
+0.010 0	+0.012 +0	+0.015 +0	+0.018 +0

Ø D I.D.	Ø E O.D.	Ø H HEAD DIA	K HEAD THK	ITEM NUMBER (LENGTH L)					
				L=100	L=120	L=140	L=160	L=180	L=200
				N=50			N=75		
1.5	4	8	6	JES-15-4-100	JES-15-4-120	JES-15-4-140			
	4.5	8	6	JES-15-45-100	JES-15-45-120	JES-15-45-140			
2	4	8	6	JES-2-4-100	JES-2-4-120	JES-2-4-140	JES-2-4-160	JES-2-4-180	JES-2-4-200
	4.5	8	6	JES-2-45-100	JES-2-45-120	JES-2-45-140	JES-2-45-160	JES-2-45-180	JES-2-45-200
	5	9	6	JES-2-5-100	JES-2-5-120	JES-2-5-140	JES-2-5-160	JES-2-5-180	JES-2-5-200
	5.5	9	6	JES-2-55-100	JES-2-55-120	JES-2-55-140	JES-2-55-160	JES-2-55-180	JES-2-55-200
	6	10	6	JES-2-6-100	JES-2-6-120	JES-2-6-140	JES-2-6-160	JES-2-6-180	JES-2-6-200
	6.5	11	6	JES-2-65-100	JES-2-65-120	JES-2-65-140	JES-2-65-160	JES-2-65-180	JES-2-65-200
	7	11	6	JES-2-7-100	JES-2-7-120	JES-2-7-140	JES-2-7-160	JES-2-7-180	JES-2-7-200
	8	13	8	JES-2-8-100	JES-2-8-120	JES-2-8-140	JES-2-8-160	JES-2-8-180	JES-2-8-200
2.5	4	8	6	JES-25-4-100	JES-25-4-120	JES-25-4-140	JES-25-4-160	JES-25-4-180	JES-25-4-200
	4.5	8	6	JES-25-45-100	JES-25-45-120	JES-25-45-140	JES-25-45-160	JES-25-45-180	JES-25-45-200
	5	9	6	JES-25-5-100	JES-25-5-120	JES-25-5-140	JES-25-5-160	JES-25-5-180	JES-25-5-200
	5.5	9	6	JES-25-55-100	JES-25-55-120	JES-25-55-140	JES-25-55-160	JES-25-55-180	JES-25-55-200
	6	10	6	JES-25-6-100	JES-25-6-120	JES-25-6-140	JES-25-6-160	JES-25-6-180	JES-25-6-200
	6.5	11	6	JES-25-65-100	JES-25-65-120	JES-25-65-140	JES-25-65-160	JES-25-65-180	JES-25-65-200
	7	11	6	JES-25-7-100	JES-25-7-120	JES-25-7-140	JES-25-7-160	JES-25-7-180	JES-25-7-200
	8	13	8	JES-25-8-100	JES-25-8-120	JES-25-8-140	JES-25-8-160	JES-25-8-180	JES-25-8-200
3	5	9	6	JES-3-5-100	JES-3-5-120	JES-3-5-140	JES-3-5-160	JES-3-5-180	JES-3-5-200
	5.5	9	6	JES-3-55-100	JES-3-55-120	JES-3-55-140	JES-3-55-160	JES-3-55-180	JES-3-55-200
	6	10	6	JES-3-6-100	JES-3-6-120	JES-3-6-140	JES-3-6-160	JES-3-6-180	JES-3-6-200
	6.5	11	6	JES-3-65-100	JES-3-65-120	JES-3-65-140	JES-3-65-160	JES-3-65-180	JES-3-65-200
	7	11	6	JES-3-7-100	JES-3-7-120	JES-3-7-140	JES-3-7-160	JES-3-7-180	JES-3-7-200
	7.5	12	6	JES-3-75-100	JES-3-75-120	JES-3-75-140	JES-3-75-160	JES-3-75-180	JES-3-75-200
	8	13	8	JES-3-8-100	JES-3-8-120	JES-3-8-140	JES-3-8-160	JES-3-8-180	JES-3-8-200
3.5	6	10	6	JES-35-6-100	JES-35-6-120	JES-35-6-140	JES-35-6-160	JES-35-6-180	JES-35-6-200
	6.5	11	6	JES-35-65-100	JES-35-65-120	JES-35-65-140	JES-35-65-160	JES-35-65-180	JES-35-65-200
	7	11	6	JES-35-7-100	JES-35-7-120	JES-35-7-140	JES-35-7-160	JES-35-7-180	JES-35-7-200
	7.5	12	6	JES-35-75-100	JES-35-75-120	JES-35-75-140	JES-35-75-160	JES-35-75-180	JES-35-75-200
	8	13	8	JES-35-8-100	JES-35-8-120	JES-35-8-140	JES-35-8-160	JES-35-8-180	JES-35-8-200
4	6	10	6	JES-4-6-100	JES-4-6-120	JES-4-6-140	JES-4-6-160	JES-4-6-180	JES-4-6-200
	6.5	11	6	JES-4-65-100	JES-4-65-120	JES-4-65-140	JES-4-65-160	JES-4-65-180	JES-4-65-200
	7	11	6	JES-4-7-100	JES-4-7-120	JES-4-7-140	JES-4-7-160	JES-4-7-180	JES-4-7-200
	7.5	12	6	JES-4-75-100	JES-4-75-120	JES-4-75-140	JES-4-75-160	JES-4-75-180	JES-4-75-200
	8	13	8	JES-4-8-100	JES-4-8-120	JES-4-8-140	JES-4-8-160	JES-4-8-180	JES-4-8-200
	10	15	8	JES-4-10-100	JES-4-10-120	JES-4-10-140	JES-4-10-160	JES-4-10-180	JES-4-10-200
	12	17	8	JES-4-12-100	JES-4-12-120	JES-4-12-140	JES-4-12-160	JES-41-2-180	JES-4-12-200
4.5	7	11	6	JES-45-7-100	JES-45-7-120	JES-45-7-140	JES-45-7-160	JES-45-7-180	JES-45-7-200
	7.5	12	6	JES-45-75-100	JES-45-75-120	JES-45-75-140	JES-45-75-160	JES-45-75-180	JES-45-75-200
	8	13	8	JES-45-8-100	JES-45-8-120	JES-45-8-140	JES-45-8-160	JES-45-8-180	JES-45-8-200
	10	15	8	JES-45-10-100	JES-45-10-120	JES-45-10-140	JES-45-10-160	JES-45-10-180	JES-45-10-200
	12	17	8	JES-45-12-100	JES-45-12-120	JES-45-12-140	JES-45-12-160	JES-45-12-180	JES-45-12-200
5	8	13	8	JES-5-8-100	JES-5-8-120	JES-5-8-140	JES-5-8-160	JES-5-8-180	JES-5-8-200
	10	15	8	JES-5-10-100	JES-5-10-120	JES-5-10-140	JES-5-10-160	JES-5-10-180	JES-5-10-200
	12	17	8	JES-5-12-100	JES-5-12-120	JES-5-12-140	JES-5-12-160	JES-5-12-180	JES-5-12-200
5.5	10	15	8	JES-55-10-100	JES-55-10-120	JES-55-10-140	JES-55-10-160	JES-55-10-180	JES-55-10-200
	12	17	8	JES-55-12-100	JES-55-12-120	JES-55-12-140	JES-55-12-160	JES-55-12-180	JES-55-12-200
6	10	15	8	JES-6-10-100	JES-6-10-120	JES-6-10-140	JES-6-10-160	JES-6-10-180	JES-6-10-200
	12	17	8	JES-6-12-100	JES-6-12-120	JES-6-12-140	JES-6-12-160	JES-6-12-180	JES-6-12-200
6.5	10	15	8	JES-65-10-100	JES-65-10-120	JES-65-10-140	JES-65-10-160	JES-65-10-180	JES-65-10-200
	12	17	8	JES-65-12-100	JES-65-12-120	JES-65-12-140	JES-65-12-160	JES-65-12-180	JES-65-12-200
7	12	17	8	JES-7-12-100	JES-7-12-120	JES-7-12-140	JES-7-12-160	JES-7-12-180	JES-7-12-200
8	12	17	8	JES-8-12-100	JES-8-12-120	JES-8-12-140	JES-8-12-160	JES-8-12-180	JES-8-12-200
9	15	20	8						JES-9-15-200
10	15	20	8						JES-10-15-200
12	20	25	8						JES-12-20-200
15	20	25	8						JES-15-20-200

HOW TO ORDER: Use Item Number in table for ordering. JES-15-4-100

JIS Sleeve availability ranges from same-day shipment to 3-week lead time.

JIS PINS, SLEEVES, BLADES

JIS Ejector Sleeves

JIS Ejector Sleeves – JES

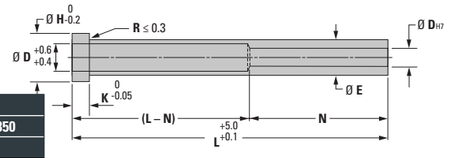

Ø D I.D.	Ø E O.D.	Ø H HEAD DIA	K HEAD THK	ITEM NUMBER (LENGTH L) L=225	L=250	L=275	L=300	L=325	L=350
				N=100			N=115		
1.5	4	8	6						
	4.5	8	6						
2	4	8	6						
	4.5	8	6						
	5	9	6	JES-2-5-225					
	5.5	9	6	JES-2-55-225					
	6	10	6	JES-2-6-225	JES-2-6-250	JES-2-6-275	JES-2-6-300		
	6.5	11	6	JES-2-65-225	JES-2-65-250	JES-2-65-275	JES-2-65-300		
	7	11	6	JES-2-7-225	JES-2-7-250	JES-2-7-275	JES-2-7-300		
	8	13	8	JES-2-8-225	JES-2-8-250	JES-2-8-275	JES-2-8-300		
2.5	4	8	6						
	4.5	8	6						
	5	9	6	JES-25-5-225					
	5.5	9	6	JES-25-55-225					
	6	10	6	JES-25-6-225	JES-25-6-250	JES-25-6-275	JES-25-6-300		
	6.5	11	6	JES-25-65-225	JES-25-65-250	JES-25-65-275	JES-25-65-300		
	7	11	6	JES-25-7-225	JES-25-7-250	JES-25-7-275	JES-25-7-300		
	8	13	8	JES-25-8-225	JES-25-8-250	JES-25-8-275	JES-25-8-300		
3	5	9	6	JES-3-5-225	JES-3-5-250	JES-3-5-275	JES-3-5-300		
	5.5	9	6	JES-3-55-225	JES-3-55-250	JES-3-55-275	JES-3-55-300		
	6	10	6	JES-3-6-225	JES-3-6-250	JES-3-6-275	JES-3-6-300	JES-3-6-325	JES-3-6-350
	6.5	11	6	JES-3-65-225	JES-3-65-250	JES-3-65-275	JES-3-65-300	JES-3-65-325	JES-3-65-350
	7	11	6	JES-3-7-225	JES-3-7-250	JES-3-7-275	JES-3-7-300	JES-3-7-325	JES-3-7-350
	7.5	12	6	JES-3-75-225	JES-3-75-250	JES-3-75-275	JES-3-75-300	JES-3-75-325	JES-3-75-350
	8	13	8	JES-3-8-225	JES-3-8-250	JES-3-8-275	JES-3-8-300	JES-3-8-325	JES-3-8-350
3.5	6	10	6	JES-35-6-225	JES-35-6-250	JES-35-6-275	JES-35-6-300	JES-35-6-325	JES-35-6-350
	6.5	11	6	JES-35-65-225	JES-35-65-250	JES-35-65-275	JES-35-65-300	JES-35-65-325	JES-35-65-350
	7	11	6	JES-35-7-225	JES-35-7-250	JES-35-7-275	JES-35-7-300	JES-35-7-325	JES-35-7-350
	7.5	12	6	JES-35-75-225	JES-35-75-250	JES-35-75-275	JES-35-75-300	JES-35-75-325	JES-35-75-350
	8	13	8	JES-35-8-225	JES-35-8-250	JES-35-8-275	JES-35-8-300	JES-35-8-325	JES-35-8-350
4	6	10	6	JES-4-6-225	JES-4-6-250	JES-4-6-275	JES-4-6-300		
	6.5	11	6	JES-4-65-225	JES-4-65-250	JES-4-65-275	JES-4-65-300	JES-4-65-325	JES-4-65-350
	7	11	6	JES-4-7-225	JES-4-7-250	JES-4-7-275	JES-4-7-300	JES-4-7-325	JES-4-7-350
	7.5	12	6	JES-4-75-225	JES-4-75-250	JES-4-75-275	JES-4-75-300	JES-4-75-325	JES-4-75-350
	8	13	8	JES-4-8-225	JES-4-8-250	JES-4-8-275	JES-4-8-300	JES-4-8-325	JES-4-8-350
	10	15	8	JES-4-10-225	JES-4-10-250	JES-4-10-275	JES-4-10-300	JES-4-10-325	JES-4-10-350
	12	17	8	JES-4-12-225	JES-4-12-250	JES-4-12-275	JES-4-12-300	JES-4-12-325	JES-4-12-350
4.5	7	11	6	JES-45-7-225	JES-45-7-250	JES-45-7-275	JES-45-7-300	JES-45-7-325	JES-45-7-350
	7.5	12	6	JES-45-75-225	JES-45-75-250	JES-45-75-275	JES-45-75-300	JES-45-75-325	JES-45-75-350
	8	13	8	JES-45-8-225	JES-45-8-250	JES-45-8-275	JES-45-8-300	JES-45-8-325	JES-45-8-350
	10	15	8	JES-45-10-225	JES-45-10-250	JES-45-10-275	JES-45-10-300	JES-45-10-325	JES-45-10-350
	12	17	8	JES-45-12-225	JES-45-12-250	JES-45-12-275	JES-45-12-300	JES-45-12-325	JES-45-12-350
5	8	13	8	JES-5-8-225	JES-5-8-250	JES-5-8-275	JES-5-8-300	JES-5-8-325	JES-5-8-350
	10	15	8	JES-5-10-225	JES-5-10-250	JES-5-10-275	JES-5-10-300	JES-5-10-325	JES-5-10-350
	12	17	8	JES-5-12-225	JES-5-12-250	JES-5-12-275	JES-5-12-300	JES-5-12-325	JES-5-12-350
5.5	10	15	8	JES-55-10-225	JES-55-10-250	JES-55-10-275	JES-55-10-300	JES-55-10-325	JES-55-10-350
	12	17	8	JES-55-12-225	JES-55-12-250	JES-55-12-275	JES-55-12-300	JES-55-12-325	JES-55-12-350
6	10	15	8	JES-6-10-225	JES-6-10-250	JES-6-10-275	JES-6-10-300	JES-6-10-325	JES-6-10-350
	12	17	8	JES-6-12-225	JES-6-12-250	JES-6-12-275	JES-6-12-300	JES-6-12-325	JES-6-12-350
6.5	10	15	8	JES-65-10-225	JES-65-10-250	JES-65-10-275	JES-65-10-300	JES-65-10-325	JES-65-10-350
	12	17	8	JES-65-12-225	JES-65-12-250	JES-65-12-275	JES-65-12-300	JES-65-12-325	JES-65-12-350
7	12	17	8	JES-7-12-225	JES-7-12-250	JES-7-12-275	JES-7-12-300	JES-7-12-325	JES-7-12-350
8	12	17	8	JES-8-12-225	JES-8-12-250	JES-8-12-275	JES-8-12-300	JES-8-12-325	JES-8-12-350
9	15	20	8	JES-9-15-225	JES-9-15-250	JES-9-15-275	JES-9-15-300	JES-9-15-325	JES-9-15-350
10	15	20	8	JES-10-15-225	JES-10-15-250	JES-10-15-275	JES-10-15-300	JES-10-15-325	JES-10-15-350
12	20	25	8	JES-12-20-225	JES-12-20-250	JES-12-20-275	JES-12-20-300	JES-12-20-325	JES-12-20-350
15	20	25	8	JES-15-20-225	JES-15-20-250	JES-15-20-275	JES-15-20-300	JES-15-20-325	JES-15-20-350

INFORMATION KEY:

D = Pin Inner Diameter
E = Pin Body Diameter
H = Head Diameter
K = Head Thickness
L = Length
N = Bearing Length
Standard: JIS
Material: SKD61
Surface Treatment: Nitrided
Surface Hardness: 900 HV~
Core Hardness: 38-42 HRC

NOTE: All dimensions are in mm.

E TOLERANCE	
E ≤ 10.0	E ≥ 12.0
-0.01 -0.02	-0.01 -0.03

DH7 TOLERANCE			
D ≤ 3.0	3.5 ≤ D ≤ 6.0	6.5 ≤ D ≤ 10.0	D ≥ 12.0
+0.010 +0	+0.012 +0	+0.015 +0	+0.018 +0

HOW TO ORDER: Use Item Number in table for ordering. JES-2-5-225

JIS Sleeve availability ranges from same-day shipment to 3-week lead time.

DME

JIS PINS, SLEEVES, BLADES

JIS Ejector Sleeves

JIS Ejector Sleeves – JES

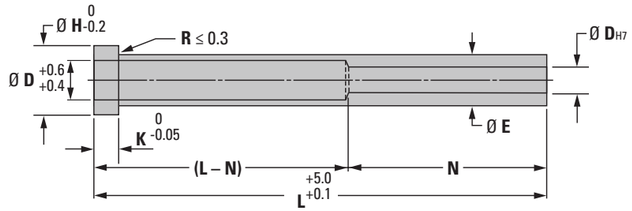

Ø D I.D.	Ø E O.D.	Ø H HEAD DIA	K HEAD THK	ITEM NUMBER (LENGTH L) L=375	L=400	L=425	L=450	L=475	L=500
				N=150					
3	5	9	6						
	5.5	9	6						
	6	10	6	JES-3-6-375	JES-3-6-400	JES-3-6-425	JES-3-6-450		
	6.5	11	6	JES-3-65-375	JES-3-65-400	JES-3-65-425	JES-3-65-450		
	7	11	6	JES-3-7-375	JES-3-7-400	JES-3-7-425	JES-3-7-450		
	7.5	12	6	JES-3-75-375					
	8	13	8	JES-3-8-375	JES-3-8-400	JES-3-8-425	JES-3-8-450		
3.5	6	10	6	JES-35-6-375	JES-35-6-400	JES-35-6-425	JES-35-6-450		
	6.5	11	6	JES-35-65-375	JES-35-65-400	JES-35-65-425	JES-35-65-450		
	7	11	6	JES-35-7-375	JES-35-7-400	JES-35-7-425	JES-35-7-450		
	7.5	12	6	JES-35-75-375					
	8	13	8	JES-35-8-375	JES-35-8-400	JES-35-8-425	JES-35-8-450		
4	6	10	6						
	6.5	11	6	JES-4-65-375	JES-4-65-400	JES-4-65-425	JES-4-65-450		
	7	11	6	JES-4-7-375	JES-4-7-400	JES-4-7-425	JES-4-7-450		
	7.5	12	6	JES-4-75-375					
	8	13	8	JES-4-8-375	JES-4-8-400	JES-4-8-425	JES-4-8-450		
	10	15	8	JES-4-10-375	JES-4-10-400	JES-4-10-425	JES-4-10-450		
	12	17	8	JES-4-12-375	JES-4-12-400	JES-4-12-425	JES-4-12-450		
4.5	7	11	6	JES-45-7-375	JES-45-7-400	JES-45-7-425	JES-457-450		
	7.5	12	6	JES-45-75-375					
	8	13	8	JES-45-8-375	JES-45-8-400	JES-45-8-425	JES-45-8-450		
	10	15	8	JES-45-10-375	JES-45-10-400	JES-45-10-425	JES-45-10-450		
	12	17	8	JES-45-12-375	JES-45-12-400	JES-45-12-425	JES-45-12-450		
5	8	13	8	JES-5-8-375	JES-5-8-400	JES-5-8-425	JES-5-8-450	JES-5-8-475	JES-5-8-500
	10	15	8	JES-5-10-375	JES-5-10-400	JES-5-10-425	JES-5-10-450	JES-5-10-475	JES-5-10-500
	12	17	8	JES-5-12-375	JES-5-12-400	JES-5-12-425	JES-5-12-450	JES-5-12-475	JES-5-12-500
5.5	10	15	8	JES-55-10-375	JES-55-10-400	JES-55-10-425	JES-55-10-450	JES-55-10-475	JES-55-10-500
	12	17	8	JES-55-12-375	JES-55-12-400	JES-55-12-425	JES-55-12-450	JES-55-12-475	JES-55-12-500
6	10	15	8	JES-6-10-375	JES-6-10-400	JES-6-10-425	JES-6-10-450	JES-6-10-475	JES-6-10-500
	12	17	8	JES-6-12-375	JES-6-12-400	JES-6-12-425	JES-6-12-450	JES-6-12-475	JES-6-12-500
6.5	10	15	8	JES-65-10-375	JES-65-10-400	JES-65-10-425	JES-65-10-450	JES-65-10-475	JES-65-10-500
	12	17	8	JES-65-12-375	JES-65-12-400	JES-65-12-425	JES-65-12-450	JES-65-12-475	JES-65-12-500
7	12	17	8	JES-7-12-375	JES-7-12-400	JES-7-12-425	JES-7-12-450	JES-7-12-475	JES-7-12-500
8	12	17	8	JES-8-12-375	JES-8-12-400	JES-8-12-425	JES-8-12-450	JES-8-12-475	JES-8-12-500
9	15	20	8	JES-9-15-375	JES-9-15-400	JES-9-15-425	JES-9-15-450	JES-9-15-475	JES-9-15-500
10	15	20	8	JES-10-15-375	JES-10-15-400	JES-10-15-425	JES-10-15-450	JES-10-15-475	JES-10-15-500
12	20	25	8	JES-12-20-375	JES-12-20-400	JES-12-20-425	JES-12-20-450	JES-12-20-475	JES-12-20-500
15	20	25	8	JES-15-20-375	JES-15-20-400	JES-15-20-425	JES-15-20-450	JES-15-20-475	JES-15-20-500

INFORMATION KEY:

D = Pin Inner Diameter
E = Pin Body Diameter
H = Head Diameter
K = Head Thickness
L = Length
N = Bearing Length
Standard: JIS
Material: SKD61
Surface Treatment: Nitrided
Surface Hardness: 900 HV~
Core Hardness: 38-42 HRC

NOTE: All dimensions are in mm.

E TOLERANCE	
E ≤ 10.0	E ≥ 12.0
-0.01 -0.02	-0.01 -0.03

DH7 TOLERANCE			
D ≤ 3.0	3.5 ≤ D ≤ 6.0	6.5 ≤ D ≤ 10.0	D ≥ 12.0
+0.010 +0	+0.012 +0	+0.015 +0	+0.018 +0

HOW TO ORDER: Use Item Number in table for ordering. JES-3-6-375

JIS Sleeve availability ranges from same-day shipment to 3-week lead time.



DME SPECIAL PINS AND SLEEVES

RAPID DELIVERY,
COST-EFFECTIVE SOLUTIONS

SPECIAL PINS AND SLEEVES

Pins and Sleeves for Special Applications



Every day, challenging new applications and materials are forcing moldmakers to develop creative new tooling solutions. DME is here to help, with comprehensive capabilities for manufacturing special pins and sleeves – quickly and cost-effectively. We offer a wide range of special features, including:

- Special diameters (up to 3") and lengths (up to 72")
- Steps
- Profiles
- Special shoulders
- O-ring grooves
- Non-standard core hardness
- Flats
- Threaded I.D. or O.D.
- Non-standard materials (non H-13)
- Surface coatings – more than 100 available, including titanium nitriding, chromium, etc.
- And many other options



If your needs are more complex, contact DME for a quote. Even when you select special pins or sleeves, you still get the industry's *fastest pricing and delivery* at a competitive price.



Industry-leading delivery lead times

You can count on DME delivery for your special pin and sleeve needs. Your DME representative can provide you with a precise completion date for your project.



SPECIAL PINS AND SLEEVES

Special Pins and Sleeves – Faxable Quote Form

QUOTE FAX HOTLINES AVAILABLE or visit https://www.dme.net/request-quote/

United States: 888-808-4363 • Canada: 800-461-9965 • International: 248-398-7394

Special Pins

Quantity: _____

Choose a pin type:

- ☐ **EX** (35 HRC - 43 HRC core hardness with 65 HRC - 70 HRC case hardness)
- ☐ **THX** (50 HRC - 55 HRC core hardness with 65 HRC - 70 HRC case hardness)
- ☐ **CX** (50 HRC - 55 HRC through hard)
- ☐ **C** (30 HRC - 35 HRC through hard)

Material H-13 ☐

Other _____

Hardness _____ RC

Nitrided Yes ☐ No ☐

Comments _____

Special Sleeves

Quantity: _____

☐ Nitride on OD

☐ Nitride on OD + ID

Material H-13 ☐

Other _____

Hardness _____ RC

Comments _____

Straight Pin

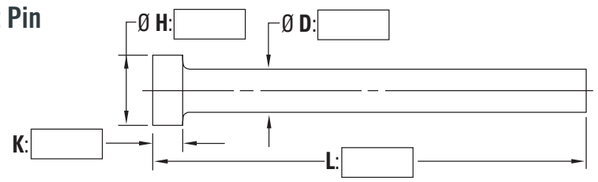

Step Pin

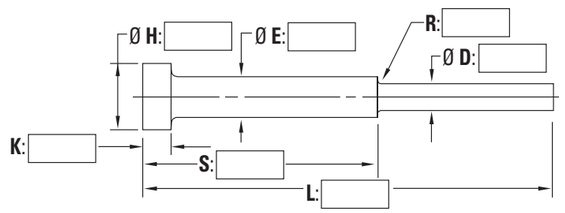

Sleeve

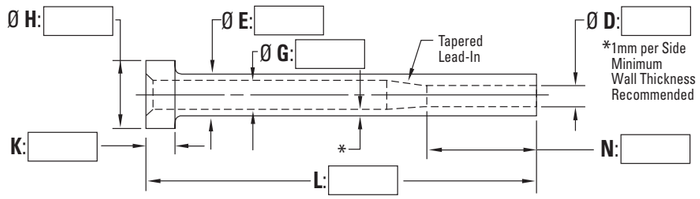

Step Sleeve

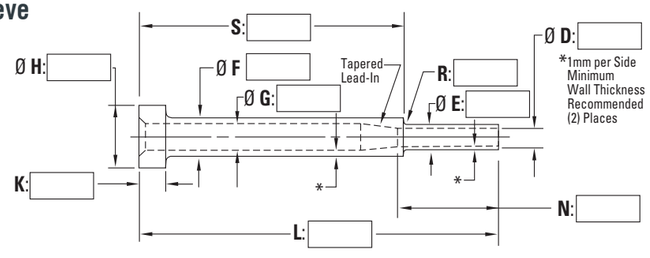

Company name: **DME account #:**

Contact name: **P.O. #:**

Phone: **FAX:**

Address: **E-mail:**

City: **State/Province:**

ZIP/Postal Code: **Country:**

Shipping method:

- ☐ **UPS Ground**
- ☐ **UPS 2nd Day Air**
- ☐ **UPS Next Day**
- ☐ **FedEx**
- ☐ **Other** _____

REFERENCE

DME Ejector and Core Pin Diameters Table

PIN DIA	FRACTION OR METRIC SIZE	EJECTOR ITEM NUMBER	EJECTOR STANDARD LENGTHS (inch or mm)	CORE ITEM NUMBER	CORE LENGTHS (inch or mm)
.0312	1/32	EX2-1/2 SH	6	—	—
.0312	1/32	EX2 (2 SH)	6	—	—
.0315	0.8mm	EJP-EHN-0.8 (SH)	80, 100, 125, 160	—	—
.0354	0.9mm	EJP-EHN-0.9 (SH)	80, 100, 125, 160	—	—
.0362	1/32 OS	EX2-1/2 SH OS	6	—	—
.0362	1/32 OS	EX2 OS (2SH)	6	—	—
.0394	1mm	EJP-EHN-1 (SH)	80, 100, 125, 160, 200	—	—
.0394	1mm	JFX-010	100, 150	—	—
.0433	3/64	EJP-EHN-1.1 (SH)	80, 100, 125, 160, 200	—	—
.0469	3/64	EX3 NS	6	—	—
.0469	3/64	EX3-1/2 SH	6, 10, 14	—	—
.0469	3/64	EX3 (2SH)	6, 10, 14	—	—
.0469	1.2mm	THX03	6	—	—
.0469	1.3mm	EJP-EHN-1.2 (SH)	80, 100, 125, 160, 200	—	—
.0472	3/64 OS	EJP-EHN-1.3 (SH)	80, 100, 125, 160, 200	—	—
.0512	3/64 OS	EX3 NS OS	6	—	—
.0519	3/64 OS	EX3-1/2 SH OS	10	—	—
.0519	3/64 OS	EX3 OS (2 SH)	10	—	—
.0519	1.4mm	THX03 OS	6	—	—
.0519	1.5mm	EJP-EHN-1.4 (SH)	80, 100, 125, 160, 200	—	—
.0551	1.5mm	EJP-EHN-1.5 (SH)	80, 100, 125, 160, 200, 250	CRP-EHN-1.5	100, 125, 160
.0591	1/16	JFX-015	100, 150, 200	—	—
.0591	1/16	EX5 NS	6	—	—
.0625	1/16	EX5-1/2 SH	6, 10, 14	—	—
.0625	1/16	EX5 (2 SH)	6, 10, 14	—	—
.0625	1/16	THX05	6	—	—
.0625	1/16	EJP-IMH-0062 (NS)	6	—	—
.0625	1/16	EJP-IMH-0062 (2 SH)	6	—	—
.0630	1.6mm	EJP-EHN-1.6 (SH)	80, 100, 125, 160, 200	CRP-EHN-1.6	40, 60, 80, 100, 125,160, 200
.0669	1.7mm	EJP-EHN-1.7 (SH)	80, 100, 125, 160, 200	—	—
.0675	1/16 OS	EX5 NS OS	6	—	—
.0675	1/16 OS	EX5-1/2 SH OS	10	—	—
.0675	1/16 OS	EX5 OS (2 SH)	10	—	—
.0675	1/16 OS	THX05 OS	6	—	—
.0709	1.8mm	EJP-EHN-1.8 (SH)	80, 100, 125, 160, 200	—	—
.0748	1.9mm	EJP-EHN-1.9 (SH)	80, 100, 125, 160, 200	—	—
.0781	5/64	EX6 NS	6, 10	—	—
.0781	5/64	EX6-1/2 SH	6, 10, 14	—	—
.0781	5/64	EX6 (2 SH)	6, 10, 14	—	—
.0781	5/64	THX06	6, 10	—	—
.0781	5/64	EJP-IMH6 NS	6	—	—
.0831	5/64 OS	THX06 OS	10	—	—
.0866	2mm	JFX-020	150, 200		

PIN DIA	FRACTION OR METRIC SIZE	EJECTOR ITEM NUMBER	EJECTOR STANDARD LENGTHS (inch or mm)	CORE ITEM NUMBER	CORE LENGTHS (inch or mm)
.0866	2.2mm	EJP-EHN-2.2	160	CRP-EHH-2.2	100, 125, 160, 200
.0866	2.2mm	EJP-EHN-2.2 (SH)	80, 100, 125, 160, 200	—	—
.0938	3/32	EX7 NS	6, 10	C/CX-7	3, 6, 10
.0938	3/32	EX7-1/2 SH	6, 10, 14	—	—
.0938	3/32	EX7 (2 SH)	6, 10, 14	—	—
.0938	3/32	THX7	6, 10	—	—
.0938	3/32	THXK7	4, 6, 10	—	—
.0938	3/32	EJP-IMH-0093 NS	6	—	—
.0938	3/32	EJP-IMH-0093 (2 SH)	6	—	—
.0984	2.5mm	EJP-EHN-2.5	160, 250, 315	CRP-EHH-2.5	100, 125, 160, 200
.0984	2.5mm	EJP-EHN-2.5 (SH)	100, 125, 160, 200, 250	—	—
.0984	2.5mm	JFX-025	100 THROUGH 700	—	—
.0988	3/32 OS	EX7 NS OS	6, 10	—	—
.0988	3/32 OS	EX7-1/2 SH OS	10	—	—
.0988	3/32 OS	EX7 OS (2 SH)	10	—	—
.0988	3/32 OS	THX07 OS	6, 10	—	—
.1063	2.7mm	EJP-EHN-2.7 (SH)	100, 125, 160, 200	—	—
.1094	7/64	EX8 NS	6, 10, 14	C/CX-8	3, 6, 10
.1094	7/64	EX8-1/2 SH	6, 10, 14	PCL07	3, 6, 14
.1094	7/64	EX8 (2 SH)	6, 10, 14	—	—
.1094	7/64	THX08	6, 10	—	—
.1144	7/64 OS	EX8 NS OS	10	—	—
.1144	7/64 OS	EX8-1/2 SH OS	10	—	—
.1144	7/64 OS	EX8-2 SH OS	10	—	—
.1144	7/64 OS	THX08 OS	10	—	—
.1181	3mm	EJP-EHN-3 (SH)	100, 125, 160, 200	CRP-EHH-3	80, 100, 125, 160, 200, 250, 315, 400, 500
.1181	3mm	JFX-030	100 THROUGH 700	—	—
.125	1/8	EX9	6, 10, 14, 25	C/CX-9	3, 6, 10, 14
.125	1/8	EXK9	6, 10, 14	PCL09	3, 6, 14, 20
.125	1/8	THX9	6, 10, 14	—	—
.125	1/8	THXK9	6, 10, 12, 14	—	—
.125	1/8	EJP-IMH-0125 (NS)	6, 10	—	—
.1260	3.2mm	EJP-EHN-3.2 (NS)	160, 250, 315, 400	CRP-EHH-3.2	100, 125, 160, 200, 250
.1260	3.2mm	EJP-EHN-3.2 (SH)	100, 125, 160, 200	—	—
.130	1/8 OS	EX9 OS	6, 10, 14	—	—
.130	1/8 OS	EX9 OS	10, 14	—	—
.130	1/8 OS	THX09 OS	6, 10, 14	—	—
.1378	3.5mm	EJP-EHN-3.5 (SH)	100, 125, 160, 200	CRP-EHH-3.5	100, 125, 160, 200, 250
.1378	3.5mm	EJP-EHN-3.5	160, 250, 315, 400	—	—
.1378	3.5mm	JFX-035	100 THROUGH 750	—	—

REFERENCE

DME Ejector and Core Pin Diameters Table

PIN DIA	FRACTION OR METRIC SIZE	EJECTOR		CORE	
		ITEM NUMBER	STANDARD LENGTHS (INCH OR mm)	ITEM NUMBER	LENGTHS (INCH OR mm)
.1406	9/64	EX10	10, 14, 25	C/CX-10	3, 6, 10, 14
.1406	9/64	EXK10	10, 14	—	—
.1406	9/64	THX10	10, 14	—	—
.1406	9/64	THXK10	6, 10, 14	—	—
.1456	9/64 OS	EX10 OS	10	—	—
.1456	9/64 OS	THX10 OS	10	—	—
.1457	3.7mm	EJP-EHN-3.7	160, 250, 315, 400	CRP-EHH-3.7	100, 125, 160, 200, 250
.1562	5/32	EX11	6, 10, 14, 18, 25	C/CX-11	3, 6, 10, 14
.1562	5/32	EXK11	6, 10, 14, 18, 25, 39	PCL11	3, 6, 14, 20
.1562	5/32	THX11	6, 10, 14	—	—
.1562	5/32	THXK11	6, 8, 10, 14	—	—
.1575	4mm	EJP-EHN-4	160, 250, 315, 400, 500	CRP-EHH-4	40, 60, 80, 100, 125, 160, 200, 250, 315
.1575	4mm	JFX-040	100 THROUGH 750	CRP-ECS-4	160, 200, 315
.1612	5/32 OS	EX11 OS	6, 10, 14	—	—
.1612	5/32 OS	THX11 OS	6, 10, 14	—	—
.1654	4.2mm		160, 250, 315, 400	CRP-EHH-4.2	100, 125, 160, 200, 250, 315
.1719	11/64	EX12	10, 14	C/CX-12	3, 6, 10, 14
.1719	11/64	THX12	10, 14	PCL12	3, 6
.1769	11/64 OS	EX12 OS	10	—	—
.1769	11/64 OS	THX12 OS	10	—	—
.1772	4.5mm	EJP-EHN-4.5	160, 250, 315, 400	CRP-EHH-4.5	100, 125, 160, 200
.1772	4.5mm	JFX-045	100 THROUGH 750	CRP-ECS-4.5	200
.1875	3/16	EX13	6, 10, 14, 18, 25, 39, 45	C/CX-13	3, 6, 10, 14
.1875	3/16	EXK13	6, 10, 14, 18, 25, 39	PCL13	3, 6, 14, 20
.1875	3/16	THX13	6, 10, 14	—	—
.1875	3/16	THXK13	6, 8, 10, 12, 14	—	—
.1875	3/16	EJP-IMH-0187 (NS)	10		
.1925	3/16 OS	EX13 OS	6, 10, 14, 18	—	—
.1925	3/16 OS	THX13 OS	6, 10, 14		
.1969	5mm	EJP-EHN-5	160, 250, 315, 400, 500, 630	CRP-EHH-5	40, 60, 80, 100, 125, 160, 200, 250, 315
.1969	5mm	JFX-050	100 THROUGH 750	CRP-ECS-5	100, 200, 315
.2031	13/64	EX14	10, 14	C/CX-14	3, 6, 10, 14
.2031	13/64	THX14	10, 14	PCL14	3, 6, 14
.2344	15/64	THX16	10, 14		
.2047	5.2mm	EJP-EHN-5.2	160, 250, 315, 400, 500	CRP-EHN-5.2	100, 125, 160, 200, 250, 315
.2081	13/64 OS	EX14 OS	10	—	—
.2081	13/64 OS	THX14 OS	10	—	—
.2165	5.5mm	EJP-EHN-5.5	160, 250, 315, 400, 500	CRP-EHH-5.5	100, 125, 160, 200
.2165	5.5mm	JFX-055	100 THROUGH 600		
.2188	7/32	EX15	6, 10, 14, 25	C/CX-15	3, 6, 10, 14
.2188	7/32	EXK15	6, 10, 14, 25	PCL15	3, 6, 14, 20
.2188	7/32	THX15	6, 10, 14	—	
.2188	7/32	THXK15	6, 8, 10, 14	—	—
.2238	7/32 OS	EX15 OS	6, 10, 14	—	—
.2238	7/32 OS	THX15 OS	6, 10, 14	—	—
.2344	15/64	EX16	10, 14	—	—
.2362	6mm	JFX-060	100 THROUGH 800	CRP-ECS-6	160, 200, 315
.2394	15/64 OS	EX16 OS	10	—	—
.2394	15/64 OS	THX16 OS	10	—	—
.2441	6.2mm	EJP-EHN-6.2	160, 250, 315, 400, 500	CRP-EHH-6.2	100, 125, 160, 200, 250, 315
.250	1/4	EX17	6, 10, 14, 18, 25, 36, 39, 45	C/CX-17	3, 6, 10, 14
.250	1/4	EXK17	6, 10, 14, 18, 25, 36, 39	PCL17	3, 6, 14, 20
.250	1/4	THX17	6, 10, 14, 18	—	—
.250	1/4	THXK17	6, 8, 10, 14, 18	—	—
.250	1/4	EJP-IMH-0250 (NS)	6, 10	—	—
.255	1/4 OS	EX17 OS	6, 10, 14, 18	—	—
.255	1/4 OS	THX17 OS	6, 10, 14	—	—
.2559	6.5mm	EJP-EHN-6.5	160, 250, 315, 400, 500	CRP-EHH-6.5	100, 125, 160, 200, 250
.2559	6.5mm	JFX-065	100 THROUGH 600	—	—
.2656	17/64	EX18	10, 14, 25	—	—
.2656	17/64	THX18	10, 14	—	—
.2706	17/64 OS	EX18 OS	10	—	—
.2706	17/64 OS	THX18 OS	10	—	—
.2756	7mm	EJP-EHN-7	160, 250, 315, 400, 500	CRP-EHH-7	100, 125, 160, 200, 250
.2756	7mm	JFX-070	100 THROUGH 800	CRP-ECS-7	
.2812	9/32	EX19	6, 10, 14, 18, 25	C/CX-19	3, 6, 10, 14
.2812	9/32	THX19	6, 10, 14	PCL19	3, 6, 14
.2812	9/32	THXK19	6, 10, 14	—	—
.2862	9/32 OS	EX19 OS	6, 10, 14	—	—
.2862	9/32 OS	THX19 OS	6, 10, 14	—	—
.2969	19/64	EX20	10, 14	—	—
.2969	19/64	THX20	10, 14	—	—
.3019	19/64 OS	EX20 OS	10	—	—
.3019	19/64 OS	THX20 OS	10	—	—
.3125	5/16	EX/EXK21	6, 10, 14, 18, 25, 36, 39	C/CX-21	3, 6, 10, 14
.3125	5/16	THX21	6, 10, 14, 18	PCL21	3, 6, 14, 20
.3125	5/16	THXK21	4, 6, 10, 12, 14	—	—
.3150	8mm	EJP-EHN-8	160, 250, 315, 400, 500, 630, 800	CRP-EHH-8	60, 80, 100, 125, 160, 200, 250, 315
.3150	8mm	JFX-080	100 THROUGH 1200	CRP-ECS-8	160, 200, 315
.3175	5/16 OS	EX21 OS	6, 10, 14, 18	—	—
.3175	5/16 OS	THX21 OS	6, 10, 14	—	—
.3228	8.2mm	EJP-EHN-8.2	160, 250, 315, 400, 500, 630	CRP-EHH-8.2	100, 125, 160, 200, 250, 315
.3281	21/64	EX22	10, 14, 25	—	—
.3281	21/64	THX22	10, 14	—	—
.3331	21/64 OS	EX22 OS	10	—	—
.3331	21/64 OS	THX22 OS	10	—	—
.3346	8.5mm	EJP-EHN-8.5	160, 250, 315, 400, 500, 630	—	—
.3438	11/32	EX23	6, 10, 14, 25	C/CX-23	3, 6, 10, 14
.3438	11/32	THX23	6, 10, 14	PCL23	3, 6, 14
.3438	11/32	THXK23	10	—	—
.3488	11/32 OS	EX23 OS	10, 14	—	—
.3488	11/32 OS	THX23 OS	10, 14	—	—
.3543	9mm	EJP-EHN-9	160, 250, 315, 400, 500, 630	—	—
.3543	9mm	JFX-090	100 THROUGH 500	—	—

DME

REFERENCE

DME Ejector and Core Pin Diameters Table

PIN DIA	FRACTION OR METRIC SIZE	EJECTOR		CORE	
		ITEM NUMBER	STANDARD LENGTHS (inch or mm)	ITEM NUMBER	LENGTHS (inch or mm)
.3594	23/64	EX24	10, 14	—	—
.3594	23/64	THX24	10, 14	—	—
.3644	23/64 OS	EX24 OS	10	—	—
.3644	23/64 OS	THX24 OS	10	—	—
.375	3/8	EX25	6, 10, 14, 18, 25, 36, 39, 45	C/CX-25	3, 6, 10, 14
.375	3/8	EXK25	6, 10, 14, 18, 25, 36, 39	PCL25	3, 6, 14, 20
.375	3/8	THX25	6, 10, 14, 18	—	—
.375	3/8	THXK25	6, 8, 10, 12, 14, 18,25	—	—
.380	3/8 OS	EX25 OS	6, 10, 14, 18	—	—
.380	3/8 OS	THX25 OS	6, 10, 14	—	—
.3906	25/64	EX26	10	—	—
.3906	25/64	THX26	10	—	—
.3937	10mm	EJP-EHN-10	160, 250, 315, 400, 500, 630, 800, 1000	CRP-EHH-10	80, 100, 125, 160, 200, 250, 315
.3937	10mm	JFX-100	100 THROUGH 1200	CRP-ECS-10	160, 315
.3956	25/64 OS	EX26 OS	10	—	—
.3956	25/64 OS	THX26 OS	10	—	—
.4016	10.2mm	EJP-EHN-10.2	160, 250, 315, 400, 500, 630	CRP-EHH-10.2	100, 125, 160, 200, 250, 315
.4062	13/32	EX27	6, 10, 14, 18, 25	C/CX-27	3, 6, 10, 14
.4062	13/32	THX27	6, 10, 14	PCL27	6
.4062	13/32	THXK27	4, 6, 10	—	—
.4112	13/32 OS	EX27 OS	10, 14	—	—
.4112	13/32 OS	THX27 OS	10, 14	—	—
.4134	10.5mm	EJP-EHN-10.5	160, 250, 315, 400, 500, 630	CRP-EHH-10.5	100, 125, 160, 200, 250, 315
.4219	27/64	EX28	10	—	—
.4219	27/64	THX28	10	—	—
.4269	27/64 OS	EX28 OS	10	—	—
.4269	27/64 OS	THX28 OS	10	—	—
.4331	11mm	EJP-EHN-11	160, 250, 315, 400, 500, 630	CRP-EHH-11	—
.4375	7/16	EX/EXK29	6, 10, 14, 18, 25, 36	C/CX-29	3, 6, 10, 14
.4375	7/16	THX29	6, 10, 14	PCL29	3, 6, 14
.4375	7/16	THXK29	6, 10, 14	—	—
.4425	7/16 OS	THX29 OS	6, 10, 14	—	—
.4531	29/64	EX30	10	—	—
.4531	29/64	THX30	10	—	—
.4581	29/64 OS	EX30 OS	10	—	—
.4581	29/64 OS	THX30 OS	10	—	—
.4688	15/32	EX31	6, 10, 14, 18, 25	—	—
.4688	15/32	THX31	6, 10, 14	—	—
.4724	12mm	EJP-EHN-12	160, 250, 315, 400, 500, 630	C/CX-31	3, 6, 10, 14
.4724	12mm	JFX-120	100 THROUGH 1200	CRP-EHH-12	80, 100, 125, 160, 200, 250, 315
.4724	12mm			CRP-ECS-12	200
.4738	15/32 OS	EX31 OS	10	—	100, 200, 315
.4803	12.2mm	EJP-EHN-12.2	160, 250, 315, 400	—	—
.4921	12.5mm	EJP-EHN-12.5	160, 250, 315, 400, 500, 630, 800	CRP-EHH-12.5	100, 125, 160, 200, 250, 315
.500	1/2	EX/EXK33	6, 10 14, 18, 25, 36, 39, 42, 45	C/CX-33	3, 6, 10, 14
.500	1/2	THX33	6, 10, 14, 18	PCL33	3, 6, 14
.500	1/2	THXK33	4, 6, 8, 10, 14	—	—
.505	1/2 OS	EX33 OS	10, 14	—	—
.505	1/2 OS	THX33 OS	10, 14	—	—
.5312	17/32	EX34	6, 10, 14	—	—
.5312	17/32	THX34	6, 10, 14	—	—
.5512	14mm	EJP-EHN-14	160, 250, 315, 400, 500, 630, 800, 1000	CRP-EHH-14	100, 125, 160, 200, 250, 315
.5512	14mm			CRP-ECS-14	200,
.5625	9/16	EX35	6, 10, 14, 18, 25	C/CX-35	6, 10, 14
.5625	9/16	THX35	6, 10, 14	PCL35	3, 6, 14
.5625	9/16	THXK35	6, 10, 12, 14	—	—
.5906	15mm	JFX-150	100 THROUGH 1200	—	—
.625	5/8	EX/EXK37	6, 10, 14, 18, 25, 36, 39	C/CX-37	6, 10, 14
.625	5/8	THX37	6, 10, 14, 18	PCL37	3, 6, 14
.625	5/8	THXK37	4, 6, 10, 14	—	—
.6299	16mm	EJP-EHN-16	160, 250, 315, 400, 500, 630, 800, 1000	CRP-EHH-16	100, 125, 160, 200, 250, 315
.6299	16mm			CRP-ECS-16	200
.6875	11/16	EX39	6, 10, 14, 18, 25	—	—
.6875	11/16	THX39	6, 10, 14	—	—
.7087	18mm	EJP-EHN-18	160, 250, 315, 400, 500, 630	CRP-EHH-18	—
.750	3/4	EX/EXK41	6, 10, 14, 18, 25, 36, 39, 42, 45	C/CX-41	6, 10, 14
.750	3/4	THX41	6, 10, 14, 18	PCL41	3, 6, 14
.750	3/4	THXK41	6, 10, 14, 25	—	—
.7874	20mm	EJP-EHN-20	160, 250, 315, 400, 500, 630, 800, 1000	CRP-EHH-20	—
.875	7/8	EX45	6, 10, 14, 18, 25	—	—
.875	7/8	THX45	6, 10, 14	—	—
.875	7/8	THXK45	6, 8	—	—
.9843	25mm	EJP-EHN-25	250, 315, 400, 500,630, 800, 1000	CRP-EHH-25	—
1.000	1"	EX/EXK47	6, 10, 14, 18, 25, 36, 39, 42, 45	—	—
1.000	1"	THX47	6, 10, 14, 18	—	—
1.000	1"	THXK47	6, 10, 12, 14, 25	—	—
1.2598	32mm	EJP-EHN-32	250, 315, 400, 500, 630, 800, 1000	CRP-EHH-32	—

MOLD SERVICE TABLES

This new generation of Mold Service Table is specifically designed to:

- Quickly and safely open molds
- Providing access to all parts of the mold for assembly and fitting of components, repair, maintenance, cleaning and production preparation
- Allows the mold to be opened and rotated without the use of cranes
- Rotates 360° for easy access to each mold half with indexing every 90°



3 Ton Table

Features:

- 1.5, 2, 3 and 6 ton weight capacity
- Provides a working height of 850mm (33.46")
- Tables include: Pivot Plates, Platform & Tool Plate
- Optional accessories- Mechanical Brackets, Magnetic Brackets and Drawer Units



Mechanical Bracket



6 Ton Table



Magnetic Brackets



Drawer Unit- Special Order

MOLD ASSEMBLY

Table of Contents

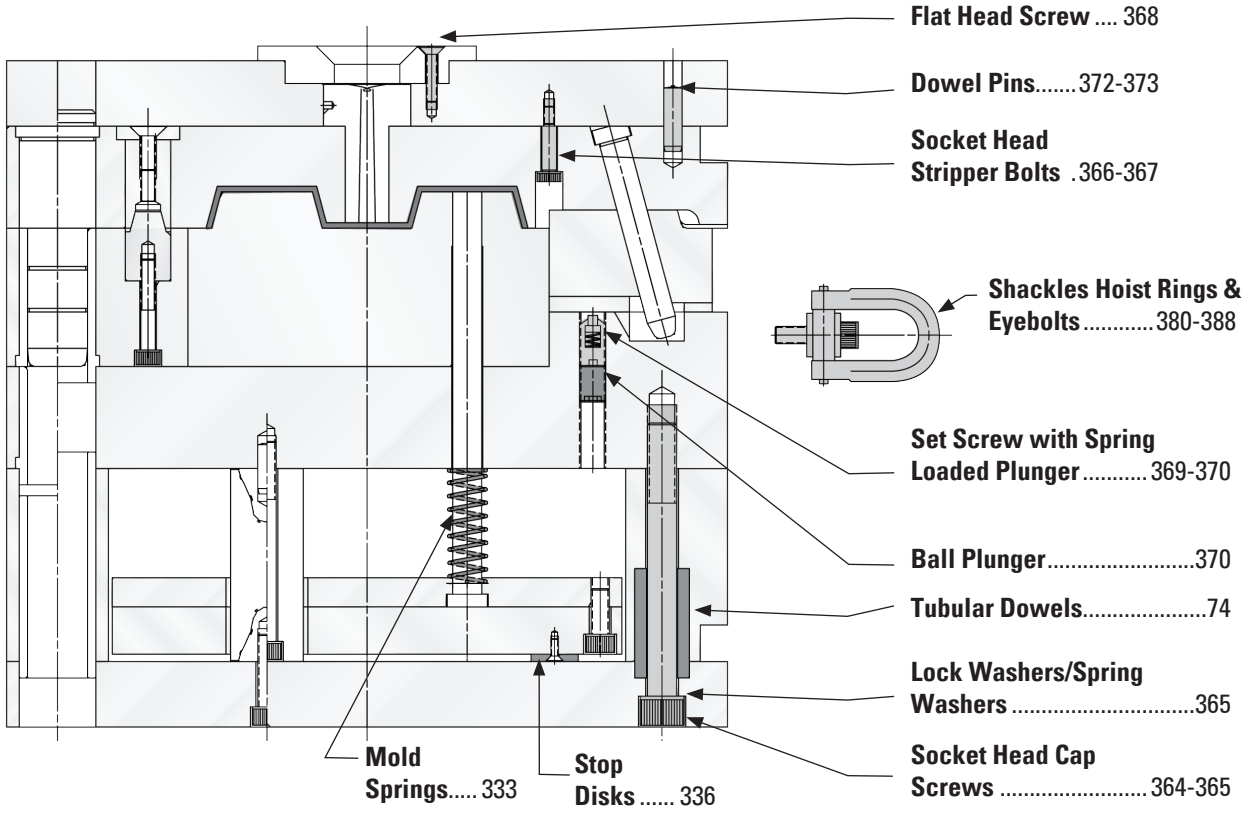

BOLTS, SCREWS & LOCK WASHERS

SOCKET HEAD CAP SCREWS – INCH 364
SOCKET HEAD CAP SCREW – METRIC 365
LOCK WASHER (SPRING WASHER) – METRIC..... 365
SOCKET HEAD STRIPPER BOLTS – INCH..... 366
SHOULDER BOLTS (STRIPPER BOLTS) – METRIC 367
FLAT HEAD SCREWS – METRIC 368
STOP DISK (FOR EJECTOR PLATES) – METRIC 368

KEYS & KEY KITS

KEYS AND KEY KITS – INCH 366
METRIC KEYS..... 367

SET SCREWS

SET SCREWS WITH SPRING LOADED PLUNGER – METRIC..... 369
SET SCREWS WITH SPRING LOADED BALL PLUNGER (REGULAR) – METRIC 370
SET SCREWS WITH SPRING LOADED BALL PLUNGER (HIGH TEMPERATURE) – METRIC..... 370
SET SCREWS WITH FLAT POINT (GRUB SCREWS) – METRIC..... 371
SET SCREWS WITH DOG POINT (ALLEN HEAD) – METRIC..... 371

TUBULAR DOWELS & DOWELS

DOWEL PINS – INCH 372
TUBULAR DOWELS – INCH..... 372
DOWEL PINS – METRIC 373
DOWEL PINS WITH INTERNAL THREAD 373
TUBULAR DOWELS - METRIC 374
WASHER/TUBULAR DOWEL – METRIC..... 374

SPRINGS

MOLD AND DIE SPRINGS – MEDIUM DUTY 375
MOLD AND DIE SPRINGS – MEDIUM HEAVY DUTY 376
MOLD AND DIE SPRINGS – HEAVY DUTY 377
MOLD AND DIE SPRINGS – EXTRA HEAVY DUTY..... 378

BELLEVILLE WASHERS

BELLEVILLE WASHERS (DISC SPRINGS) – METRIC..... 379

HOIST RINGS & LIFTING HOLES

SHACKLES, HOIST RINGS, & EYEBOLTS 380-388
MAGNETIC LIFTERS 389
LIFTING CHAINS..... 390
LIFTING HOLES..... 391

APPENDICES

MIN. RECOMMENDED ADDITIONAL SHCS 392-393

MOLD ASSEMBLY

Socket Head Cap Screws – INCH

Up to 12" Long

High-grade alloy steel, heat treated to 38-45 HRC. Tensile strength: 180,000 psi minimum.



D = DIAMETER OF SCREWS												
		NO. 6	NO. 8	NO. 10	¼	5/16	⅜	½	⅝	¾	1	
DECIMAL EQUIVALENT		.138	.164	.190	.250	.3125	.375	.500	.625	.750	1.000	DECIMAL EQUIVALENT
THREADS PER INCH NATIONAL COARSE		32	32	24	20	18	16	13	11	10	8	THREADS PER INCH NATIONAL COARSE
L = LENGTH UNDER THE HEAD	¼	●	●									¼
	⅜	●	●	●	●	●						⅜
	½	●	●	●	●	●	●	●				½
	⅝	●	●	●	●	●	●	●				⅝
	¾	●	●	●	●	●	●	●				¾
	⅞	●	●	●	●	●	●	●				⅞
	1	●	●	●	●	●	●	●	●			1
	1¼		●	●	●	●	●	●	●			1¼
	1½		●	●	●	●	●	●	●			1½
	1¾			●	●	●	●	●	●			1¾
	2			●	●	●	●	●	●	●	●	2
	2¼				●	●	●	●	●	●		2¼
	2½				●	●	●	●	●	●	●	2½
	2¾				●	●	●	●	●	●		2¾
	3				●	●	●	●	●	●	●	3
	3¼					●	●	●	●	●		3¼
	3½					●	●	●	●	●	●	3½
	4						●	●	●	●	●	4
	4½						●	●	●	●		4½
	5						●	●	●	●	●	5
	5¼							●				5¼
	5½							●	●	●	●	5½
	5¾							●				5¾
	6						●	●	●	●	●	6
	6½							●	●	●	●	6½
	7							●	●	●	●	7
	7½							●	●			7½
	8							●	●	●	●	8
	9							●				9
	10							●	●	●		10
	12							●	●	●		12
MAX HEAD DIAMETER		.226	.270	5/16	⅜	15/32	9/16	¾	15/16	1⅛	1½	MAX HEAD DIAMETER
MAX HEAD HEIGHT		.138	.164	.190	¼	5/16	⅜	½	⅝	¾	1	MAX HEAD HEIGHT
SIZE OF HEX HOLE		7/64	9/64	5/32	3/16	¼	5/16	⅜	½	⅝	¾	SIZE OF HEX HOLE

● = in stock

HOW to BUILD AN ITEM NUMBER: Diameter + Length + CS (Cap Screw)

Examples:

¼" diameter x 2-¾" long Cap Screw = 14234CS

1" diameter x 2" long Cap Screw = 12CS

½" diameter x 10" long Cap Screw = 1210CS

MOLD ASSEMBLY

Socket Head Cap Screws – METRIC Lock Washers (Spring Washers) – METRIC

Socket Head Cap Screws – M

Tornillos cabeza Allen | Parafuso de cabeça sextavada | Vis 6-pans téte cylindrique | Zylinderkopfschrauben

INFORMATION KEY:
D = Thread Diameter
H = Head Diameter
K = Head Height
L = Length
N = Thread Length
T = Hex Socket Size (Across Flats)
Standard: DIN 912-12.9
Material: Per DIN Specification
Dimensions: Shown in Millimeters (mm)

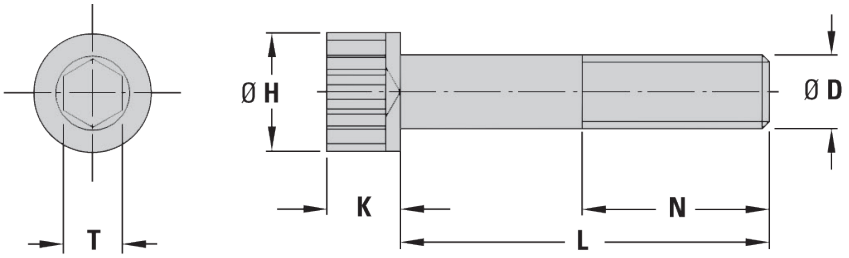

D	N	H	K	T	L																							
					8	10	12	16	20	25	30	40	50	60	70	80	90	100	110	120	130	140	150	160	180	200	220	240	260
M4	12	7	4	3																									
M6	18	10	6	5																									
M8	22	13	8	6												⚡		⚡		⚡									
M10	25	16	10	8						⚡	⚡					⚡			⚡	⚡	⚡		⚡	⚡					
M12	28	18	12	10							⚡					⚡		⚡		⚡	⚡	⚡	⚡	⚡	⚡	⚡			
M16	38	24	16	14									⚡			⚡		⚡		⚡									
M16	44	24	16	14																	⚡	⚡	⚡	⚡	⚡				
M16	57	21	10	14																					⚡		⚡		
M20	52	30	20	17																									
M20	65	30	20	17																									

HOW TO ORDER: Specify D diameter and L length. Include zeros as shown, but omit all spaces (spaces are only shown here for easier reading).

D L

Example:
D L
M6 30

Example:
D L
M20 200

KEY TO CHART
⚡ Items in stock
2-3 week delivery
Contact DME for quote

Lock Washers/Spring Washers – R54

Rondanas de Presion | Freios | Rondelles de retenue | Sicherungsscheibe (Federscheibe)

INFORMATION KEY:
D = For Screw Diameter
F = Inside Diameter
P = Outside Diameter
T = Thickness
Standard: DIN 7980
Material: Per DIN Specification
Dimensions: Shown in Millimeters (mm)

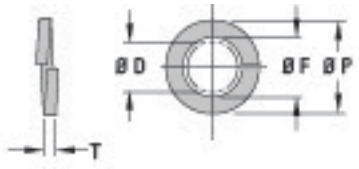

ITEM NUMBER	D	F	P	T	AVAILABILITY
R54 08 2	08	8.1	12.7	2.0	⚡
R54 10 2,5	10	10.2	16	2.5	⚡
R54 12 2,5	12	12.5	18	2.5	⚡

HOW TO ORDER: Specify Item Number. Include zeros and commas but omit decimals and all spaces (spaces are only shown here for easier reading).

KEY TO CHART
⚡ Items in stock

MOLD ASSEMBLY

Socket Head Stripper Bolts – INCH Keys and Key Kits – INCH

Socket Head Stripper Bolts

These Socket Head Stripper Bolts (Shoulder Screws) are made from high-grade alloy steel, heat treated to 36 HRC minimum. Tensile strength: 160,000 psi.



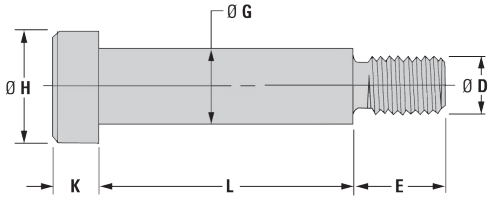

- Concentricity between diameters G and H is within .005" T.I.R.
- Tolerance of Ø G is -.002 -.004

L SHOULDER LENGTH	SHOULDER DIA. G					
	1/4	5/16	3/8	1/2	5/8	3/4
1	●	●	●	●		
1 1/4	●	●	●	●	●	
1 1/2	●	●	●	●	●	●
1 3/4		●	●	●	●	●
2		●	●	●	●	●
2 1/4			●	●	●	●
2 1/2			●	●	●	●
2 3/4			●	●	●	●
3			●	●	●	●
3 1/4			●	●	●	●
3 1/2			●	●	●	●
3 3/4			●	●	●	●
4			●	●	●	●
4 1/4				●	●	●
4 1/2				●	●	●
4 3/4				●	●	●
5				●	●	●
5 1/2					●	●
6					●	●
7						●

● = in stock

G SHOULDER DIAMETER	1/4	5/16	3/8	1/2	5/8	3/4
D THREAD	NO. 10-24	1/4-20	5/16-18	3/8-16	1/2-13	5/8-11
E THREAD LENGTH	3/8	7/16	1/2	5/8	3/4	7/8
H HEAD DIAMETER	3/8 +.000 -.018	7/16 +.000 -.019	9/16 +.000 -.019	3/4 +.000 -.021	7/8 +.000 -.022	1" +.000 -.023
K HEAD HEIGHT	3/16 +.000 -.006	7/32 +.000 -.006	1/4 +.000 -.006	5/16 +.000 -.006	3/8 +.000 -.007	1/2 +.000 -.008
HEX HOLE ACROSS FLATS	1/8	5/32	3/16	1/4	5/16	3/8

HOW TO BUILD AN ITEM NUMBER: Diameter + Shoulder Length + SB (Stripper Bolt)

Examples:

1/4" diameter x 1" long Stripper Bolt = 141SB

5/16" diameter x 2" long Stripper Bolt = 5162SB

5/8" diameter x 4-3/4" long Stripper Bolt = 58434SB

Keys and Key Kits – KK, LAK

The .050 to 3/8 keys are sold in a 13-piece kit;
1/2 to 3/4 keys are sold individually as detailed at right.

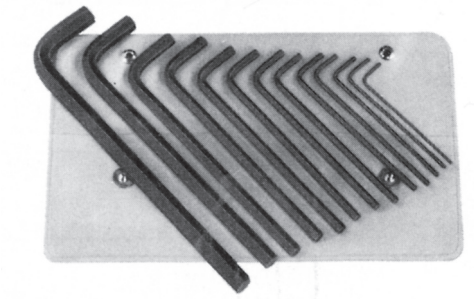

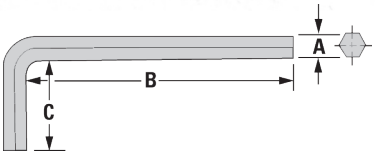

CAP SCREW	STRIPPER BOLT	PRESS. PLUG	A	B	C	ITEM NUMBER
NO. 0			.050	2.844	.531	KK-13 (13-PIECE KIT, .050 TO 3/8 ACROSS FLATS AS DETAILED)
NO. 1			1/16	3.000	.562	
NO. 2 & 3			5/64	3.188	.609	
NO. 4 & 5			3/32	3.375	.656	
NO. 6			7/64	3.562	.703	
	1/4		1/8	3.750	.750	
NO. 8			9/64	3.960	.796	
NO. 10	5/16		5/32	4.125	.844	
1/4	3/8	1/8	3/16	4.500	.938	
			7/32	4.875	1.031	
5/16	1/2	1/4	1/4	5.250	1.125	
3/8	5/8	3/8	5/16	6.000	1.250	
1/2	3/4	1/2	3/8	6.750	1.375	
5/8			1/2	8.250	1.625	LAK-12
		3/4	9/16	9.000	1.750	LAK-916
3/4		1"	5/8	9.750	1.875	LAK-58
1"			3/4	11.250	2.125	LAK-34

MOLD ASSEMBLY

Keys – METRIC Shoulder Bolts (Stripper Bolts) – METRIC

METRIC Keys – SE630

Extra long hexagon socket screw keys – chrome plated | Sechskant-Stiftschlüssel, Lange Ausführung – chromatisiert

Extra lange inbussleutels – verchroomd | Clés mâles coudées pour vis à six pans creux extra longues – chromés

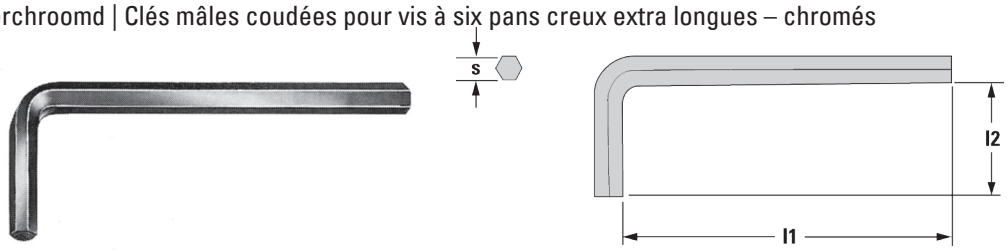

Material: 50 CrV4 – DIN 911

REF s	l1	l2	DIN 912	DIN 913-915	DIN 7991
SE 630 2	100	16	M2.5	M4	
SE 630 3	126	20	M4	M6	M5
SE 630 4	140	25	M5	M8	M6
SE 630 5	160	28	M6	M10	M8
SE 630 6	180	32	M8	M12-M14	M10
SE 630 8	200	36	M10	M16	M12
SE 630 10	224	40	M12	M18-M20	M14-M16
SE 630 12	250	45	M14	M22-M24	M18-M20
SE 630 14	280	55	M16-M18		M22-M24

Shoulder Bolts/Stripper Bolts – PM

Tornillos de hombro | Parafusos limitador | Vis épaulées | Paßschrauben

INFORMATION KEY:
D = Shoulder Diameter
F = Thread Diameter
H = Head Diameter
J = Socket Depth
K = Head Thickness
N = Thread Length
S = Shoulder Length
T = Socket Hex Size (Across Flats)
Standard: AFNOR E 27-192 Class 12.9
Material: AFNOR 35 NC 6 (AISI 3135 Type) Steel
Dimensions: Shown in Millimeters (mm)

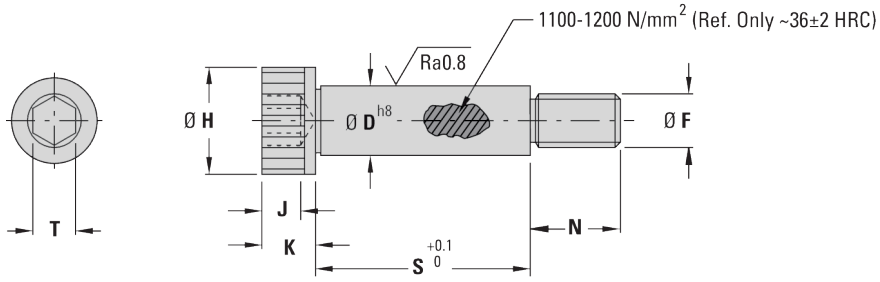

ITEM PREFIX	H	K	N	D	T	J	F	S																					
								6	8	10	12	14	16	20	25	30	40	50	60	70	80	90	100	110	120	140	160	200	250
PM5	9	4	8	6	3	2.5	M5				⚡		⚡		⚡		⚡												
PM6	11	5	10	8	4	3	M6				⚡		⚡	⚡	⚡		⚡												
PM8	14	6	12	10	5	4	M8						⚡	⚡	⚡	⚡	⚡	⚡					⚡						
PM10	18	8	16	12	6	5	M10							⚡		⚡	⚡				⚡		⚡		⚡				
PM12	22	10	20	16	8	6	M12								⚡	⚡	⚡		⚡		⚡		⚡		⚡				
PM16	28	12	25	20	10	8	M16										⚡		⚡		⚡		⚡						
PM20	36	16	32	25	14	11	M20												⚡										
PM24	45	20	40	32	17	12	M24																						

HOW TO ORDER: Specify Item Number with prefix and S length. Include zeros as shown, but omit all spaces (spaces are only shown here for easier reading).

Prefix **S**

Example:
Prefix S
PM8 20

Example:
Prefix S
PM24 120

KEY TO CHART
⚡ Items in stock
2-3 week delivery
Contact DME for quote

MOLD ASSEMBLY

Flat Head Screws – METRIC Stop Disk (for Ejector Plates) – METRIC

Flat Head Screws – SM

Tornillo de cabeza plana avellanada | Parafusos de cabeça cónica | Vis creuses | Senkkopfschrauben

INFORMATION KEY:
D = Thread Diameter
H = Head Diameter
K = Head Height
L = Length
T = Hex Socket Size (Across Flats)
Standard: DIN 7991-10.9
Material: Per DIN Specification
Dimensions: Shown in Millimeters (mm)

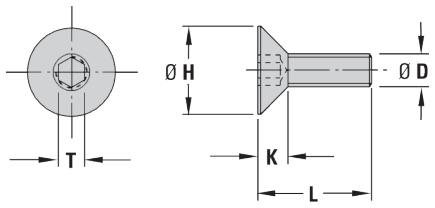

ITEM PREFIX	H	K	T	D	L										
					8	10	12	16	20	25	30	35	40	45	50
SM3	6	2.5	1.7	M3											
SM4	8	3	2.3	M4	⚡	⚡	⚡								
SM5	10	4	2.8	M5		⚡	⚡	⚡							
SM6	12	5	3.3	M6			⚡	⚡							
SM8	16	6	4.4	M8				⚡	⚡						
SM10	20	8	5.5	M10											
SM12	24	10	6.5	M12											

HOW TO ORDER: Specify Item Number with prefix and L length. Include zeros as shown, but omit all spaces (spaces are only shown here for easier reading).

Prefix **L**

Example:
Prefix L
PM3 10

Example:
Prefix L
PM8 16

KEY TO CHART
⚡ Items in stock
2-3 week delivery
Contact DME for quote

Stop Disk for Ejector Plates – R18

Arandela de Tope | Anilhas de encosto | Repos d'épaisseur pour plaques d'éjection | Distanzscheibe für Auswerferplatte

INFORMATION KEY:
Standard: Euro-Series
Material: 1.1191 (AISI 1045 Type) Steel
Dimensions: Shown in Millimeters (mm)

ITEM NUMBER	AVAILABILITY
R18 18	⚡

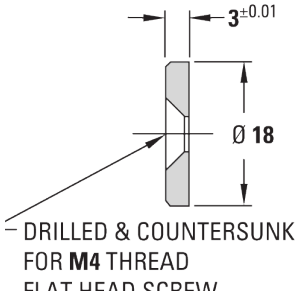

HOW TO ORDER: Specify Item Number. Omit spaces (spaces are only shown here for easier reading).

Use with SM4 8 Flat Head Screw (M4 thread x 8mm long) which must be purchased separately. See Flat Head Screws above.

KEY TO CHART
⚡ Items in stock

MOLD ASSEMBLY

Set Screws with Spring Loaded Plunger – METRIC

Set Screws with Spring Loaded Plunger – FM

Tornillos de presión con resorte (embolo) | Pernos roscados de cilindro | Butées à ressort | Federnde Druckstifte

INFORMATION KEY:
D = Thread Diameter
E = Plunger End Diameter
L = Body Length
N = Plunger Maximum Travel
F1 = Initial End Force (Force in Newtons)
F2 = Final End Force (Force in Newtons)
Material: 1.0716 Steel
Max. Temp.: 250°C (482°F)
Dimensions: Other metric units of measure

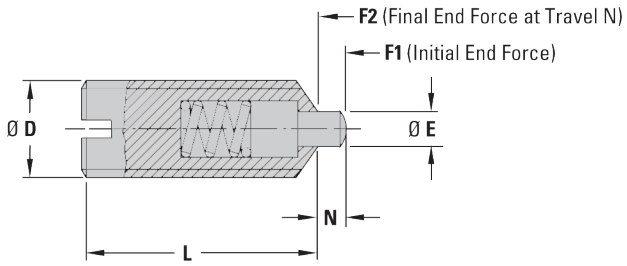

ITEM NUMBER	AVAILABILITY	D	L	E	N	F1 (INITIAL)	F2 (FINAL)
FM 04 09		M4	9	1.8	1.5	6	16
FM 05 12		M5	12	2.4	2	6	17
FM 06 14		M6	14	2.7	2	7	18
FM 08 16		M8	16	4	2	20	35
FM 10 19	⚡	M10	19	4.5	2.5	20	45
FM 12 22		M12	22	6	3.5	25	60
FM 16 24	⚡	M16	24	8.5	4.5	50	95
FM 20 30		M20	30	10	6.5	80	140
FM 24 34		M24	34	12	8	100	180

KEY TO CHART
⚡ Items in stock
2-3 week delivery
Contact DME for quote

HOW TO ORDER: Specify Item Number. Omit spaces (spaces are only shown here for easier reading).

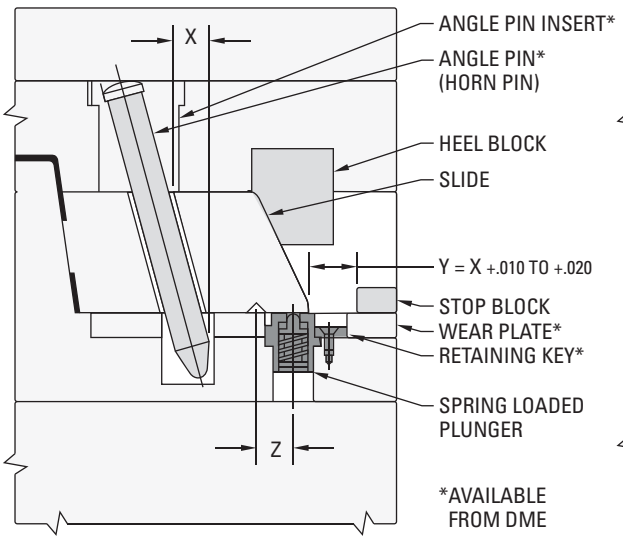

MOLD CLOSED

X = SLIDE TRAVEL CAUSED BY ANGLE PIN
Z = V-GROOVE LOCATION IN SLIDE FROM CENTERLINE OF SLIDE RETAINER
X = Z
Y = STOP BLOCK LOCATION

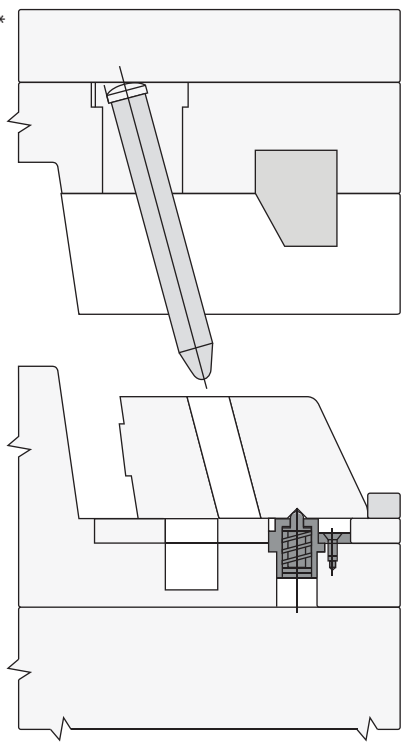

MOLD OPEN

MOLD ASSEMBLY

Set Screws with Spring Loaded Ball Plunger (Regular and High Temperature) – METRIC

Set Screws with Spring Loaded Ball Plunger – FD

Tornillos de presión con resorte | Pernos roscados de esfera | Butées à ressort à bille | Federnde Druckstifte

INFORMATION KEY:
D = Thread Diameter
E = Ball Diameter
L = Body Length
N = Ball Plunger Maximum Travel
F1 = Initial End Force (Force in Newtons)
F2 = Final End Force (Force in Newtons)
Material: 1.0716 Steel
Max. Temp.: 100°C (212°F)
Dimensions: Shown in Millimeters (mm)

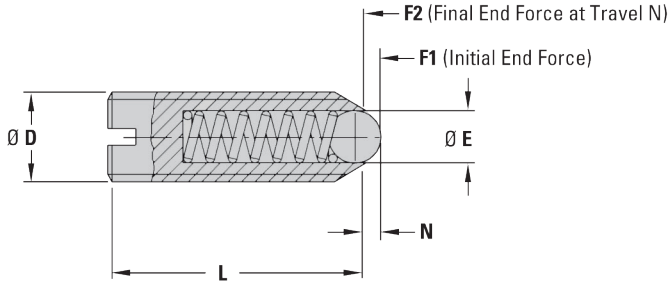

ITEM NUMBER	AVAILABILITY	D	L	E	N	F1 (INITIAL)	F2 (FINAL)
FD 4 9		M4	9	2.5	0.8	4	10
FD 5 12		M5	12	3	0.9	6	11
FD 6 14		M6	14	3.5	1	9	15
FD 8 16		M8	16	5	1.5	18	30
FD 10 19	⚡	M10	19	6	2	20	40
FD 12 22		M12	22	8	2.5	30	55
FD 16 24	⚡	M16	24	10	3.5	65	120
FD 20 30		M20	30	12	4.5	90	140
FD 24 34		M24	34	15	5.5	125	180

KEY TO CHART
⚡ Items in stock
2-3 week delivery
Contact DME for quote

HOW TO ORDER: Specify Item Number. Omit spaces (spaces are only shown here for easier reading).

Set Screws with Spring Loaded Ball Plunger (High Temperature) – FDV

Tornillos de presión con resorte (alta temperatura) | Pernos roscados de esfera (alta temperatura)
Butées à ressort à bille (à haute température) | Federnde Druckstifte (Hochtemperatur)

INFORMATION KEY:
D = Thread Diameter
E = Ball Diameter
L = Body Length
N = Ball Plunger Maximum Travel
F1 = Initial End Force (Force in Newtons)
F2 = Final End Force (Force in Newtons)
Material: 1.4305 (AISI 303 Type) Stainless Steel
Max. Temp.: 250°C (482°F)
Dimensions: Shown in Millimeters (mm)

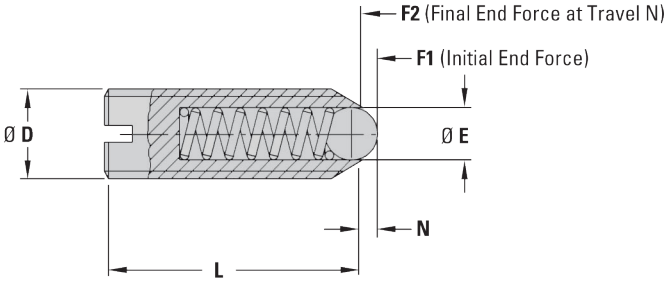

ITEM NUMBER	AVAILABILITY	D	L	E	N	F1 (INITIAL)	F2 (FINAL)
FDV 5 12		M5	12	3	0.9	6	11
FDV 6 14		M6	14	3.5	1	9	15
FDV 8 16	⚡	M8	16	5	1.5	18	30
FDV 10 19	⚡	M10	19	6	2	20	40
FDV 12 22		M12	22	8	2.5	30	55
FDV 16 24	⚡	M16	24	10	3.5	65	120
FDV 20 30		M20	30	18	4.5	90	140
FDV 24 34		M24	34	15	5.5	125	180

KEY TO CHART
⚡ Items in stock
2-3 week delivery
Contact DME for quote

HOW TO ORDER: Specify Item Number. Omit spaces (spaces are only shown here for easier reading).

MOLD ASSEMBLY

Set Screws with Flat Point (Grub Screws) – METRIC Set Screws with Dog Point (Allen Head) – METRIC

Set Screws with Flat Point (Grub Screws) – GS913

Tornillo sin cabeza | Pernos roscados | Vis de réglage sans tête | Gewindestifte

INFORMATION KEY:
D = Thread Diameter
L = Length
N = Hex Socket Depth
T = Hex Socket Size (Across Flats)
Standard: DIN 913-45H
Material: Per DIN Specification
Dimensions: Shown in Millimeters (mm)

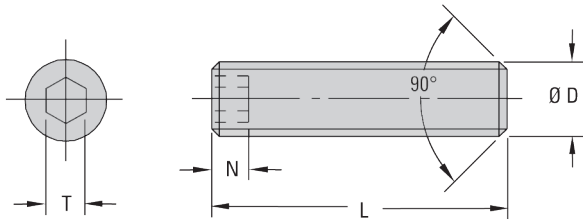

ITEM PREFIX	T	N	D	L											
				004	005	006	008	010	012	016	020	025	030	040	050
GS913	1.5	2.5	M03												
	2	2.5	M04												
	2.5	3	M05					⚡							
	3	3.5	M06							⚡					
	4	5	M08								⚡		⚡	⚡	
	5	6	M10									⚡	⚡	⚡	⚡
	6	8	M12												
	6	10	M16												

HOW TO ORDER: Specify Item Number with prefix, D diameter and L length. Include zeros as shown, but omit all spaces (spaces are only shown here for easier reading).

Prefix **D** **L**

Example:
Prefix D L
GS913 M08 016

Example:
Prefix D L
GS913 M12 050

KEY TO CHART
⚡ Items in stock
2-3 week delivery
Contact DME for quote

Set Screws with Dog Point (Allen Head) – GS915

Tornillo sin cabeza | Parafusos de regulagem – cabeça Allen | Vis de réglage sans tête | Gewindestifte mit Zapfen

INFORMATION KEY:
D = Thread Diameter
G = Dog Point Diameter
L = Length
M = Dog Point Length
T = Hex Socket Size (Across Flats)
Standard: DIN 915-45H
Material: Per DIN Specification
Dimensions: Shown in Millimeters (mm)

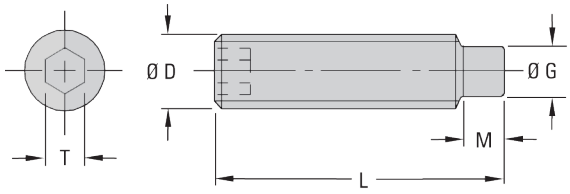

ITEM PREFIX	T	G	M	D	L							
					010	016	020	025	030	040	050	060
GS915	2	2.5	3	M04								
	3	4	3.5	M06		⚡		⚡				
	4	5.5	5	M08								
	5	7	5.5	M10								
	6	8.5	7	M12								
	8	12	9	M16								

KEY TO CHART
⚡ Items in stock
2-3 week delivery
Contact DME for quote

HOW TO ORDER: Specify Item Number with prefix, D diameter and L length. Include zeros as shown, but omit all spaces (spaces are only shown here for easier reading).

Prefix **D** **L**

Example:
Prefix D L
GS915 M06 016

Example:
Prefix D L
GS915 M12 050

MOLD ASSEMBLY

Dowel Pins and Tubular Dowels – INCH

Dowel Pins

DME Dowel Pins are made from high-grade alloy steel, hardened and precision ground.

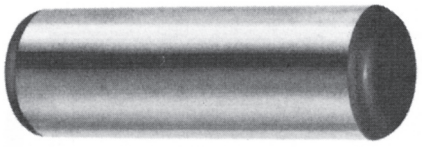

LENGTH	DIAMETER									LENGTH
	1/8	3/16	1/4	5/16	3/8	1/2	5/8	3/4	1	
3/8	●	–	–	–	–	–	–	–	–	3/8
1/2	●	●	●	–	–	–	–	–	–	1/2
3/4	●	●	●	–	●	●	–	–	–	3/4
1	●	●	●	●	●	●	–	–	–	1
1 1/4	–	–	●	●	●	●	–	–	–	1 1/4
1 1/2	–	●	●	●	●	●	●	–	–	1 1/2
2	●	●	●	●	●	●	●	●	●	2
2 1/2	–	–	●	–	●	●	●	●	–	2 1/2
3	–	–	–	–	●	●	●	●	●	3
4	–	–	–	–	–	●	●	●	●	4
5	–	–	–	–	–	–	●	●	●	5

● = in stock

HOW TO BUILD AN ITEM NUMBER:
Diameter + Length + DP (Dowel Pin)

Examples:

3/16" diameter x 1/2" long Dowel Pin = 31612DP

1/4" diameter x 1-1/4" long Dowel Pin = 14114DP

1" diameter x 2" long Dowel Pin = 12DP

WHEN ORDERING, PLEASE SPECIFY:

1. Quantity
2. Diameter
3. Length

Tubular Dowels

DME Tubular Dowels are hardened and precision ground. They are used in DME mold base assemblies to accurately align the "B" plate, support plate and the ejector housing.

The use of DME Tubular Dowels allows more room for waterlines by superimposing the dowel pin and cap screw as shown at the right.

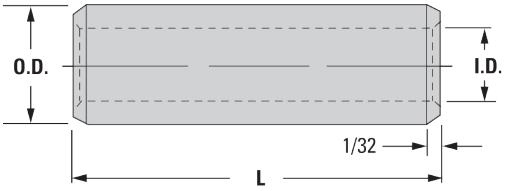

NOM. DIA	O.D. ± .0002	I.D.	L STANDARD LENGTHS (PRICE EACH)						
			3/8	1/2	7/8	1 3/8	1 7/8	2 3/8	2 7/8
3/8	.3752	.260	●	–	●	–	–	–	–
5/8	.6252	.385	–	●	–	●	●	●	–
3/4	.7502	.510	●	●	–	●	●	●	●
7/8	.8752	.635	–	●	–	–	–	●	●

● = in stock

HOW TO BUILD AN ITEM NUMBER: Diameter + Length + TD (Tubular Dowel)

Examples:

3/8" diameter x 7/8" long Tubular Dowel = 3878TD

5/8" diameter x 1-3/8" long Tubular Dowel = 58138TD

7/8" diameter x 2-7/8" long Tubular Dowel = 78278TD

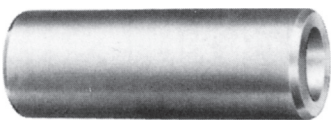

AS USED IN MOLD BASE ASSEMBLIES

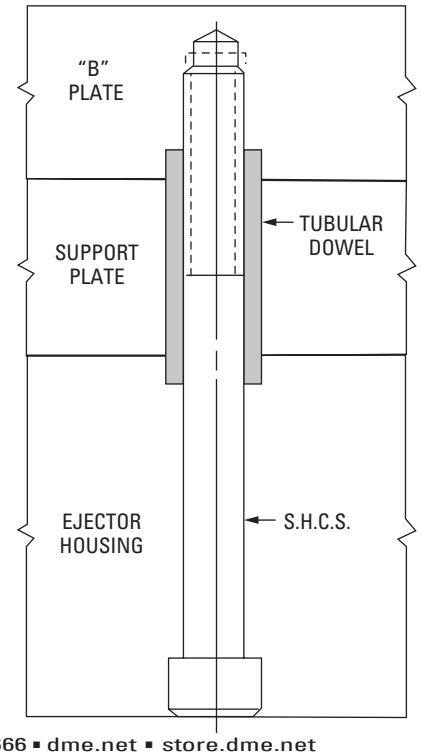

MOLD ASSEMBLY

Dowel Pins – METRIC

Dowel Pins – DP

Clavija | Cavilhas | Goupilles cylindriques | Zylinderstifte

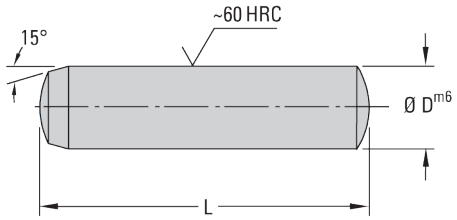

INFORMATION KEY:
D = Pin Outside Diameter
L = Length
Standard: DIN 6325, ISO 8734
Material: Per DIN and ISO Specifications
Dimensions: Shown in Millimeters (mm)

ITEM PREFIX	D	L																	
		6	8	10	12	14	16	18	20	24	28	32	36	40	50	60	80	100	120	140
DP	2		⚡																	
	3			⚡																
	4																			
	5				⚡		⚡		⚡											
	6								⚡	⚡		⚡								
	8								⚡	⚡		⚡		⚡		⚡				
	10									⚡		⚡		⚡		⚡	⚡			
	12											⚡		⚡		⚡	⚡			
	16																			
	20															⚡				

HOW TO ORDER: Specify Item Number with prefix, D diameter and L length. Include zeros as shown, but omit all spaces (spaces are only shown here for easier reading).

Prefix **D** **L**

Example:
Prefix D L
DP 2 8

Example:
Prefix D L
DP 20 60

KEY TO CHART
⚡ Items in stock
2-3 week delivery
Contact DME for quote

Dowel Pins with Internal Thread/Pull Dowels – WZ7005

Clavija con cuerda interna | Cavilhas | Goupilles cylindriques | Zylinderstifte

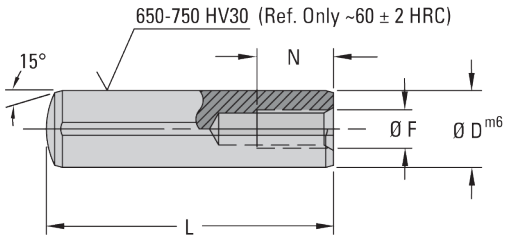

INFORMATION KEY:
D = Pin Outside Diameter
F = Tap Diameter
L = Length
N = Tap Depth
Standard: DIN EN 28735 – Type A
Material: Per DIN Specification
Dimensions: Shown in Millimeters (mm)

ITEM PREFIX	D	F	N	L									
				020	024	028	032	036	040	050	060	080	100
WZ7005	06	M4	6	⚡			⚡		⚡				
	08	M5	8						⚡	⚡	⚡		
	10	M6	10						⚡		⚡		
	12	M6	12						⚡		⚡		
	14	M8	12										
	16	M8	16										
	20	M10	20										

HOW TO ORDER: Specify Item Number with prefix, D diameter and L length. Include zeros as shown, but omit all spaces (spaces are only shown here for easier reading).

Prefix **D** **L**

Example:
Prefix D L
WZ7005 06 020

Example:
Prefix D L
WZ7005 12 040

KEY TO CHART
⚡ Items in stock
2-3 week delivery
Contact DME for quote

MOLD ASSEMBLY

Tubular Dowels; Washer/Tubular Dowel (Disk for Tubular Dowels) – METRIC

Tubular Dowels – R09

Registro tubular | Cavilha tubular | Douaires tubulaires | Paßhülsen

INFORMATION KEY:
D = Outside Diameter
G = Inside Diameter
L = Length
Standard: Euro-Series
Material: 1.7131 (AISI 5115 Type) Steel
Surface Treatment: Case Hardened
Dimensions: Shown in Millimeters (mm)

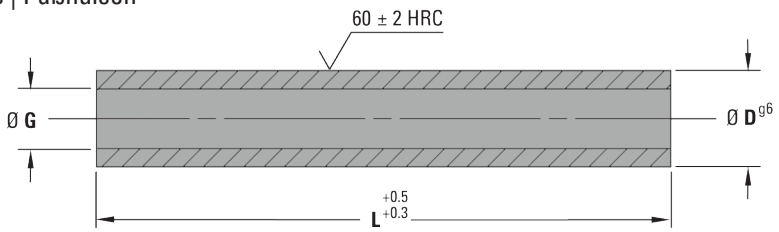

ITEM PREFIX	D	G	L													
			020	030	040	050	060	070	080	100	120	140	160	180	200	240	300
R09	10	6.2			⚡												
	14	8.5															
	18	10.5					⚡		⚡								
	24	13					⚡		⚡		⚡						
	30	17							⚡		⚡		⚡	⚡			

HOW TO ORDER: Specify Item Number with prefix, D diameter and L length. Include zeros as shown, but omit all spaces (spaces are only shown here for easier reading).

Prefix	D	L

Example:
Prefix D L
R09 10 040

Example:
Prefix D L
R09 30 180

KEY TO CHART
⚡ Items in stock
2-3 week delivery
Contact DME for quote

Washer/Tubular Dowel (Disk for Tubular Dowels) – R091

Arandela – Registro tubular | Anilhas – para cavilha tubular
Cachetage cylindrique – Douaires tubulaires | Scheibe – Paßhülsen

INFORMATION KEY:
D = Outside Diameter
G = Inside Diameter
K = Thickness
Standard: Euro-Series
Material: 1.7131 (AISI 5115 Type) Steel
Surface Treatment: Case Hardened
Dimensions: Shown in Millimeters (mm)

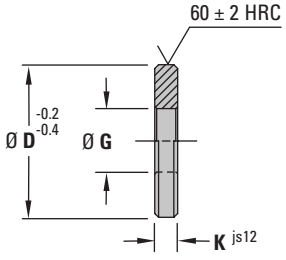

ITEM NUMBER	D	K	G	AVAILABILITY
R091 14 3	14	003	6.2	⚡
R091 18 4	18	004	8.5	⚡
R091 24 5	24	005	10.5	⚡
R091 30 6	30	006	13.0	⚡
R091 40 8	40	008	17.0	⚡

HOW TO ORDER: Specify Item Number. Include zeros as shown, but omit all spaces (spaces are only shown here for easier reading).

Prefix	D	K

Example:
Prefix D K
R091 14 003

Example:
Prefix D K
R091 40 008

KEY TO CHART
⚡ Items in stock

MOLD ASSEMBLY

Mold and Die Springs Medium Duty (Color-Coded Blue)



(LBS x .454 = kg)

Medium Duty Mold and Die Springs (Blue) – SMD

Maximum Deflection: 50% of Free Length Efficient Operating Range: 25% to 35% of Free Length

Manufactured by Raymond from a special rectangular-shaped, round-cornered chromium alloy. Provides high resistance to shock loads, increased deflection, wider operating temperatures and longer life. Color-coded by work range to simplify selection and specification.

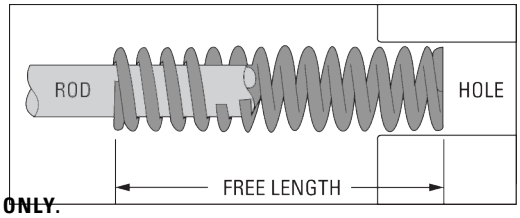

NOTE: **DEFLECTION VALUES NEAR SOLID INTENDED FOR DESIGN INFORMATION ONLY.

HOLE DIA	ROD DIA	ITEM NUMBER	FREE LENGTH INCH	FREE LENGTH MM	APPROX LOAD AT 1/10" DEFLEC. (LBS)	LOAD AT 50% DEFLEC. (LBS)**
3/8 9.5MM	3/16 4.7MM	SMD1004	1.00	25.40	6.0	30.0
		SMD1005	1.25	31.75	5.0	31.5
		SMD1006	1.50	38.10	4.2	31.5
		SMD1007	1.75	44.45	3.7	32.6
		SMD1008	2.00	50.80	3.1	31.0
		SMD1010	2.50	63.50	2.6	32.5
		SMD1012	3.00	76.20	2.1	31.5
		SMD1048	12.00	304.80	0.6	36.0
1/2 13MM	9/32 7MM	SMD2004	1.00	25.40	11.0	55.0
		SMD2005	1.25	31.75	8.2	51.7
		SMD2006	1.50	38.10	6.8	51.0
		SMD2007	1.75	44.45	6.0	52.8
		SMD2008	2.00	50.80	5.5	55.0
		SMD2010	2.50	63.50	4.5	56.3
		SMD2012	3.00	76.20	3.5	52.5
		SMD2014	3.50	88.90	3.0	52.5
		SMD2018	4.50	114.30	2.3	51.8
		SMD2022	5.50	139.70	2.0	55.0
		SMD2026	6.50	165.10	1.4	45.5
		SMD2030	7.50	190.50	1.2	45.0
		SMD2048	12.00	304.80	0.7	42.0
5/8 16MM	11/32 8.7MM	SMD3004	1.00	25.40	16.4	82.0
		SMD3005	1.25	31.75	12.4	78.1
		SMD3006	1.50	38.10	10.8	81.0
		SMD3007	1.75	44.45	9.6	84.5
		SMD3008	2.00	50.80	8.6	86.0
		SMD3010	2.50	63.50	6.5	81.3
		SMD3012	3.00	76.20	5.8	87.0
		SMD3014	3.50	88.90	5.0	87.5
		SMD3016	4.00	101.60	4.4	88.0
		SMD3048	12.00	304.80	1.5	90.0
3/4 19.5MM	3/8 9.5MM	SMD4004	1.00	25.40	32.0	160.0
		SMD4005	1.25	31.75	25.6	161.3
		SMD4006	1.50	38.10	20.0	150.0
		SMD4007	1.75	44.45	17.6	154.9
		SMD4008	2.00	50.80	15.0	150.0
		SMD4010	2.50	63.50	12.0	150.0
		SMD4012	3.00	76.20	10.1	151.5
		SMD4014	3.50	88.90	8.3	145.3
		SMD4016	4.00	101.60	7.5	144.0
		SMD4018	4.50	114.30	6.4	144.0
		SMD4020	5.00	127.00	6.0	150.0
		SMD4022	5.50	139.70	5.5	151.3
		SMD4024	6.00	152.40	5.0	150.0
		SMD4026	6.50	165.10	4.7	162.5
		SMD4030	7.50	190.50	3.8	142.5
		SMD4048	12.00	304.80	2.4	144.0
1 25.5MM	1/2 13MM	SMD5004	1.00	25.40	55.0	275.0
		SMD5005	1.25	31.75	45.0	283.5
		SMD5006	1.50	38.10	37.3	279.8
		SMD5007	1.75	44.45	32.0	281.6
		SMD5008	2.00	50.80	26.8	268.0
		SMD5010	2.50	63.50	20.9	261.3

HOLE DIA	ROD DIA	ITEM NUMBER	FREE LENGTH INCH	FREE LENGTH MM	APPROX LOAD AT 1/10" DEFLEC. (LBS)	LOAD AT 50% DEFLEC. (LBS)**
1 25.5MM	1/2 13MM	SMD5012	3.00	76.20	17.1	256.5
		SMD5014	3.50	88.90	14.5	253.8
		SMD5016	4.00	101.60	12.5	250.0
		SMD5018	4.50	114.30	11.0	247.5
		SMD5020	5.00	127.00	9.6	240.0
		SMD5022	5.50	139.70	8.8	242.0
		SMD5024	6.00	152.40	8.0	240.0
		SMD5028	7.00	177.80	7.2	280.0
		SMD5032	8.00	203.20	6.0	240.0
		SMD5048	12.00	304.80	4.0	240.0
1 1/4 32MM	5/8 16MM	SMD6006	1.50	38.10	49.6	372.0
		SMD6007	1.75	44.45	40.6	357.3
		SMD6008	2.00	50.80	37.6	376.0
		SMD6010	2.50	63.50	28.8	360.0
		SMD6012	3.00	76.20	24.0	360.0
		SMD6014	3.50	88.90	20.0	350.0
		SMD6016	4.00	101.60	17.6	352.0
		SMD6018	4.50	114.30	16.0	360.0
		SMD6020	5.00	127.00	14.3	357.5
		SMD6022	5.50	139.70	12.8	352.0
		SMD6024	6.00	152.40	12.0	360.0
		SMD6028	7.00	177.80	10.4	420.0
		SMD6032	8.00	203.20	8.8	352.0
		SMD6040	10.00	254.00	7.2	360.0
		SMD6048	12.00	304.80	6.0	360.0
1-1/2 38.5MM	3/4 19.5MM	SMD7008	2.00	50.80	53.0	530.0
		SMD7010	2.50	63.50	42.7	533.8
		SMD7012	3.00	76.20	36.0	540.0
		SMD7014	3.50	88.90	30.0	525.0
		SMD7016	4.00	101.60	24.9	498.0
		SMD7018	4.50	114.30	23.0	517.5
		SMD7020	5.00	127.00	21.0	525.0
		SMD7022	5.50	139.70	18.5	508.8
		SMD7024	6.00	152.40	17.0	510.0
		SMD7028	7.00	177.80	15.3	595.0
		SMD7032	8.00	203.20	13.2	528.0
		SMD7040	10.00	254.00	10.6	530.0
		SMD7048	12.00	304.80	8.5	510.0
2 51MM	1 25.5MM	SMD8010	2.50	63.50	100.0	1250.0
		SMD8012	3.00	76.20	83.0	1245.0
		SMD8014	3.50	88.90	67.7	1184.8
		SMD8016	4.00	101.60	60.0	1200.0
		SMD8018	4.50	114.30	53.0	1192.5
		SMD8020	5.00	127.00	47.0	1175.0
		SMD8022	5.50	139.70	40.5	1113.8
		SMD8024	6.00	152.40	39.0	1170.0
		SMD8028	7.00	177.80	31.2	1365.0
		SMD8032	8.00	203.20	28.5	1140.0
		SMD8040	10.00	254.00	21.6	1080.0
		SMD8048	12.00	304.80	18.5	1110.0

MOLD ASSEMBLY

Mold and Die Springs Medium Heavy Duty (Color-Coded Red)



(LBS x .454 = kg)

Medium Heavy Duty Mold and Die Springs (Red) – SMH

Maximum Deflection: 37% of Free Length Efficient Operating Range: 20% to 25% of Free Length

Manufactured by Raymond from a special rectangular-shaped, round-cornered chromium alloy. Provides high resistance to shock loads, increased deflection, wider operating temperatures and longer life. Color-coded by work range to simplify selection and specification.

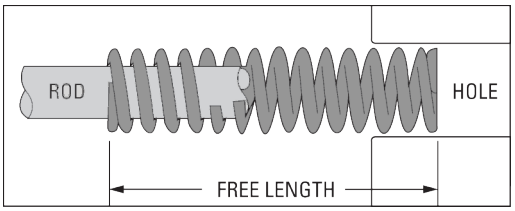

NOTE: **DEFLECTION VALUES NEAR SOLID INTENDED FOR DESIGN INFORMATION ONLY.

HOLE DIA	ROD DIA	ITEM NUMBER	FREE LENGTH INCH	FREE LENGTH MM	APPROX LOAD AT 1/10" DEFLEC. (LBS)	LOAD AT 37% DEFLEC. (LBS)**
3/8 9.5MM	3/16 4.7MM	SMH1004	1.00	25.40	8.4	31.1
		SMH1005	1.25	31.75	7.3	33.6
		SMH1006	1.50	38.10	6.7	37.5
		SMH1007	1.75	44.45	5.8	37.7
		SMH1008	2.00	50.80	5.0	37.0
		SMH1010	2.50	63.50	43.7	34.4
		SMH1012	3.00	76.20	3.0	33.3
		SMH1048	12.00	304.80	0.8	35.5
1/2 13MM	9/32 7MM	SMH2004	1.00	25.40	15.5	57.4
		SMH2005	1.25	31.75	12.2	56.1
		SMH2006	1.50	38.10	9.8	54.9
		SMH2007	1.75	44.45	8.5	55.3
		SMH2008	2.00	50.80	7.5	55.5
		SMH2010	2.50	63.50	6.0	55.8
		SMH2012	3.00	76.20	5.1	56.6
		SMH2014	3.50	88.90	4.0	52.0
		SMH2048	12.00	304.80	1.1	48.8
5/8 16MM	11/32 8.7MM	SMH3004	1.00	25.40	30.0	111.0
		SMH3005	1.25	31.75	21.5	98.9
		SMH3006	1.50	38.10	19.0	106.4
		SMH3007	1.75	44.45	16.8	109.2
		SMH3008	2.00	50.80	15.5	114.7
		SMH3010	2.50	63.50	11.5	107.0
		SMH3012	3.00	76.20	10.0	111.0
		SMH3014	3.50	88.90	8.5	110.5
		SMH3016	4.00	101.60	7.6	112.5
		SMH3048	12.00	304.80	2.6	115.4
3/4 19.5MM	3/8 9.5MM	SMH4004	1.00	25.40	50.0	185.0
		SMH4005	1.25	31.75	38.0	174.8
		SMH4006	1.50	38.10	31.0	173.6
		SMH4007	1.75	44.45	27.0	175.5
		SMH4008	2.00	50.80	24.0	177.6
		SMH4010	2.50	63.50	18.8	174.8
		SMH4012	3.00	76.20	14.9	165.4
		SMH4014	3.50	88.90	12.8	166.4
		SMH4016	4.00	101.60	11.0	162.8
		SMH4018	4.50	114.30	10.0	167.0
		SMH4020	5.00	127.00	9.0	166.5
		SMH4022	5.50	139.70	8.0	163.2
		SMH4024	6.00	152.40	7.5	166.5
		SMH4048	12.00	304.80	3.5	155.4
1 25.5MM	1/2 13MM	SMH5004	1.00	25.40	82.7	306.0
		SMH5005	1.25	31.75	65.3	300.4
		SMH5006	1.50	38.10	53.8	301.3
		SMH5007	1.75	44.45	46.1	299.7
		SMH5008	2.00	50.80	40.0	296.0
		SMH5010	2.50	63.50	32.2	299.5
		SMH5012	3.00	76.20	26.7	296.4
		SMH5014	3.50	88.90	22.9	297.7
		SMH5016	4.00	101.60	20.2	299.0
		SMH5018	4.50	114.30	17.8	297.3
		SMH5020	5.00	127.00	15.7	290.5
		SMH5022	5.50	139.70	13.7	279.5
		SMH5024	6.00	152.40	12.5	277.5
		SMH5028	7.00	177.80	10.9	282.3
		SMH5032	8.00	203.20	9.6	284.6
		SMH5048	12.00	304.80	6.5	288.6

HOLE DIA	ROD DIA	ITEM NUMBER	FREE LENGTH INCH	FREE LENGTH MM	APPROX LOAD AT 1/10" DEFLEC. (LBS)	LOAD AT 37% DEFLEC. (LBS)**
1 1/4 32MM	5/8 16MM	SMH6006	1.50	38.10	114.4	640.6
		SMH6007	1.75	44.45	100.8	655.2
		SMH6008	2.00	50.80	83.8	620.1
		SMH6010	2.50	63.50	62.4	580.3
		SMH6012	3.00	76.20	51.2	568.3
		SMH6014	3.50	88.90	44.0	572.0
		SMH6016	4.00	101.60	38.1	563.9
		SMH6018	4.50	114.30	32.9	549.4
		SMH6020	5.00	127.00	30.0	555.0
		SMH6022	5.50	139.70	26.4	538.6
		SMH6024	6.00	152.40	25.0	555.0
		SMH6028	7.00	177.80	21.0	553.9
		SMH6032	8.00	203.20	18.4	544.6
		SMH6040	10.00	254.00	14.5	536.5
		SMH6048	12.00	304.80	12.4	550.6
1 1/2 38.5MM	3/4 19.5MM	SMH7008	2.00	50.80	103.0	762.2
		SMH7010	2.50	63.50	81.2	755.2
		SMH7012	3.00	76.20	62.4	692.6
		SMH7014	3.50	88.90	54.0	702.0
		SMH7016	4.00	101.60	46.5	688.2
		SMH7018	4.50	114.30	41.0	684.7
		SMH7020	5.00	127.00	36.8	680.8
		SMH7022	5.50	139.70	33.0	680.8
		SMH7024	6.00	152.40	29.5	673.2
		SMH7028	7.00	177.80	25.5	654.9
		SMH7032	8.00	203.20	22.0	651.2
		SMH7040	10.00	254.00	17.6	651.2
		SMH7048	12.00	304.80	14.4	639.4
2 51MM	1 25.5MM	SMH8010	2.50	63.50	118.4	1101.1
		SMH8012	3.00	76.20	93.0	1032.3
		SMH8014	3.50	88.90	78.2	1016.6
		SMH8016	4.00	101.60	66.4	982.7
		SMH8018	4.50	114.30	60.0	1002.0
		SMH8020	5.00	127.00	53.4	987.9
		SMH8022	5.50	139.70	49.0	999.6
		SMH8024	6.00	152.40	45.0	999.0
		SMH8028	7.00	177.80	37.4	968.7
		SMH8032	8.00	203.20	33.0	976.8
		SMH8040	10.00	254.00	26.0	962.0
		SMH8048	12.00	304.80	21.5	954.6

THE WORD "RAYMOND" AND THE GOLD, RED, GREEN AND BLUE COLOR CODING OF MOLD AND DIE SPRINGS IN THE HEAVY DUTY, MEDIUM HEAVY DUTY, EXTRA HEAVY DUTY AND MEDIUM DUTY LOAD RANGES, RESPECTIVELY, ARE REGISTERED TRADEMARKS OF THE BARNES GROUP, INC.

MOLD ASSEMBLY

Mold and Die Springs Heavy Duty (Color-Coded Gold)



(LBS x .454 = kg)

Heavy Duty Mold and Die Springs (Gold) – SHD

Maximum Deflection: 30% of Free Length

Efficient Operating Range: 15% to 20% of Free Length

Manufactured by Raymond from a special rectangular-shaped, round-cornered chromium alloy. Provides high resistance to shock loads, increased deflection, wider operating temperatures and longer life. Color-coded by work range to simplify selection and specification.

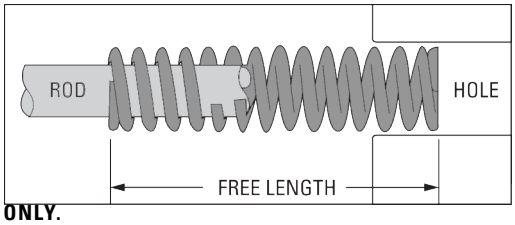

NOTE: **DEFLECTION VALUES NEAR SOLID INTENDED FOR DESIGN INFORMATION ONLY.

HOLE DIA	ROD DIA	ITEM NUMBER	FREE LENGTH INCH	FREE LENGTH MM	APPROX LOAD AT 1/10" DEFLEC. (LBS)	LOAD AT 30% DEFLEC. (LBS)**
3/8 9.5MM	3/16 4.7MM	SHD1004	1.00	25.40	11.6	34.8
		SHD1005	1.25	31.75	9.8	37.2
		SHD1006	1.50	38.10	8.0	36.0
		SHD1007	1.75	44.45	7.5	39.8
		SHD1008	2.00	50.80	6.2	37.2
		SHD1010	2.50	63.50	5.0	37.5
		SHD1012	3.00	76.20	4.1	36.9
		SHD1048	12.00	304.80	1.1	39.6
1/2 13MM	9/32 7MM	SHD2004	1.00	25.40	22.5	67.5
		SHD2005	1.25	31.75	18.2	69.2
		SHD2006	1.50	38.10	14.8	66.6
		SHD2007	1.75	44.45	12.6	66.8
		SHD2008	2.00	50.80	11.0	66.0
		SHD2010	2.50	63.50	8.6	64.5
		SHD2012	3.00	76.20	7.4	66.6
		SHD2014	3.50	88.90	6.0	63.0
		SHD2048	12.00	304.80	1.7	61.2
5/8 16MM	11/32 8.7MM	SHD3004	1.00	25.40	42.4	127.2
		SHD3005	1.25	31.75	32.5	123.5
		SHD3006	1.50	38.10	28.0	126.0
		SHD3007	1.75	44.45	24.0	127.2
		SHD3008	2.00	50.80	20.8	124.8
		SHD3010	2.50	63.50	17.0	127.5
		SHD3012	3.00	76.20	14.0	126.0
		SHD3014	3.50	88.90	12.2	128.1
		SHD3016	4.00	101.60	10.8	129.6
		SHD3048	12.00	304.80	3.0	108.0
3/4 19.5MM	3/8 9.5MM	SHD4004	1.00	25.40	108.0	324.0
		SHD4005	1.25	31.75	88.0	334.4
		SHD4006	1.50	38.10	69.0	310.5
		SHD4007	1.75	44.45	60.0	318.0
		SHD4008	2.00	50.80	51.5	309.0
		SHD4010	2.50	63.50	40.0	300.0
		SHD4012	3.00	76.20	33.0	297.0
		SHD4014	3.50	88.90	29.0	304.5
		SHD4016	4.00	101.60	25.0	300.0
		SHD4018	4.50	114.30	22.0	297.0
		SHD4020	5.00	127.00	19.5	292.5
		SHD4022	5.50	139.70	17.8	293.7
		SHD4024	6.00	152.40	16.0	288.0
		SHD4048	12.00	304.80	8.0	288.0
1 25.5MM	1/2 13MM	SHD5004	1.00	25.40	193.2	579.6
		SHD5005	1.25	31.75	146.5	556.7
		SHD5006	1.50	38.10	120.0	540.0
		SHD5007	1.75	44.45	104.0	551.2
		SHD5008	2.00	50.80	87.2	523.2
		SHD5010	2.50	63.50	66.5	498.8
		SHD5012	3.00	76.20	54.4	489.6
		SHD5014	3.50	88.90	45.6	478.8
		SHD5016	4.00	101.60	40.0	480.0
		SHD5018	4.50	114.30	35.2	475.2
		SHD5020	5.00	127.00	31.2	468.0
		SHD5022	5.50	139.70	28.8	475.2
		SHD5024	6.00	152.40	25.6	460.8
		SHD5028	7.00	177.80	22.4	470.4
		SHD5032	8.00	203.20	19.2	460.8
		SHD5048	12.00	304.80	12.8	460.8

HOLE DIA	ROD DIA	ITEM NUMBER	FREE LENGTH INCH	FREE LENGTH MM	APPROX LOAD AT 1/10" DEFLEC. (LBS)	LOAD AT 30% DEFLEC. (LBS)**
1 1/4 32MM	5/8 16MM	SHD6006	1.50	38.10	220.0	990.0
		SHD6007	1.75	44.45	181.6	962.5
		SHD6008	2.00	50.80	149.6	897.6
		SHD6010	2.50	63.50	117.6	882.0
		SHD6012	3.00	76.20	95.2	856.8
		SHD6014	3.50	88.90	78.0	819.0
		SHD6016	4.00	101.60	66.4	796.8
		SHD6018	4.50	114.30	58.4	788.4
		SHD6020	5.00	127.00	53.0	795.0
		SHD6022	5.50	139.70	47.2	778.8
		SHD6024	6.00	152.40	45.0	810.0
		SHD6028	7.00	177.80	36.8	772.8
		SHD6032	8.00	203.20	32.8	787.2
		SHD6040	10.00	254.00	25.6	768.0
		SHD6048	12.00	304.80	22.0	792.0
1 1/2 38.5MM	3/4 19.5MM	SHD7008	2.00	50.80	198.0	1188.0
		SHD7010	2.50	63.50	155.0	1162.5
		SHD7012	3.00	76.20	130.0	1170.0
		SHD7014	3.50	88.90	106.4	1117.2
		SHD7016	4.00	101.60	91.2	1094.4
		SHD7018	4.50	114.30	81.6	1101.6
		SHD7020	5.00	127.00	73.0	1095.0
		SHD7022	5.50	139.70	67.0	1105.5
		SHD7024	6.00	152.40	58.4	1051.2
		SHD7028	7.00	177.80	49.6	1041.6
		SHD7032	8.00	203.20	43.2	1036.8
		SHD7040	10.00	254.00	36.2	1086.0
		SHD7048	12.00	304.80	30.0	1080.0
2 51MM	1 25.5MM	SHD8010	2.50	63.50	251.2	1884.0
		SHD8012	3.00	76.20	206.0	1854.0
		SHD8014	3.50	88.90	170.0	1785.0
		SHD8016	4.00	101.60	150.0	1800.0
		SHD8018	4.50	114.30	127.2	1717.2
		SHD8020	5.00	127.00	118.6	1779.0
		SHD8022	5.50	139.70	107.7	1777.1
		SHD8024	6.00	152.40	97.7	1777.1
		SHD8028	7.00	177.80	82.0	1722.0
		SHD8032	8.00	203.20	73.0	1752.0
		SHD8040	10.00	254.00	57.2	1716.0
		SHD8048	12.00	304.80	47.7	1717.2

THE WORD "RAYMOND" AND THE GOLD, RED, GREEN AND BLUE COLOR CODING OF MOLD AND DIE SPRINGS IN THE HEAVY DUTY, MEDIUM HEAVY DUTY, EXTRA HEAVY DUTY AND MEDIUM DUTY LOAD RANGES, RESPECTIVELY, ARE REGISTERED TRADEMARKS OF THE BARNES GROUP, INC.

MOLD ASSEMBLY

Mold and Die Springs Extra Heavy Duty (Color-Coded Green)



(LBS x .454 = kg)

Extra Heavy Duty Mold and Die Springs (Green) – SEH

Maximum Deflection: 25% of Free Length

Efficient Operating Range: 15% of Free Length

Manufactured by Raymond from a special rectangular-shaped, round-cornered chromium alloy. Provides high resistance to shock loads, increased deflection, wider operating temperatures and longer life. Color-coded by work range to simplify selection and specification.

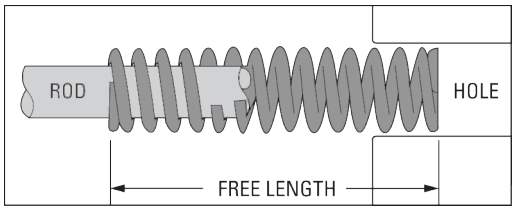

NOTE: **DEFLECTION VALUES NEAR SOLID INTENDED FOR DESIGN INFORMATION ONLY.

HOLE DIA	ROD DIA	ITEM NUMBER	FREE LENGTH INCH	FREE LENGTH MM	APPROX LOAD AT 1/10" DEFLEC. (LBS)	LOAD AT 25% DEFLEC. (LBS)**
3/8 9.5MM	3/16 4.7MM	SEH1004	1.00	25.40	21.0	52.5
		SEH1005	1.25	31.75	14.6	45.3
		SEH1006	1.50	38.10	12.5	47.5
		SEH1007	1.75	44.45	10.5	46.2
		SEH1008	2.00	50.80	9.0	45.0
		SEH1010	2.50	63.50	7.5	47.3
		SEH1012	3.00	76.20	6.3	47.3
		SEH1048	12.00	304.80	1.5	45.0
1/2 13MM	9/32 7MM	SEH2004	1.00	25.40	31.0	77.5
		SEH2005	1.25	31.75	24.0	74.4
		SEH2006	1.50	38.10	19.2	73.0
		SEH2007	1.75	44.45	17.0	74.8
		SEH2008	2.00	50.80	14.0	70.0
		SEH2010	2.50	63.50	11.5	72.5
		SEH2012	3.00	76.20	9.4	70.5
		SEH2014	3.50	88.90	8.0	70.4
		SEH2048	12.00	304.80	2.4	72.0
5/8 16MM	11/32 8.7MM	SEH3004	1.00	25.40	63.0	157.5
		SEH3005	1.25	31.75	43.8	135.8
		SEH3006	1.50	38.10	37.0	140.6
		SEH3007	1.75	44.45	31.0	136.4
		SEH3008	2.00	50.80	28.0	140.0
		SEH3010	2.50	63.50	22.0	138.6
		SEH3012	3.00	76.20	19.0	142.5
		SEH3014	3.50	88.90	15.4	135.5
		SEH3016	4.00	101.60	13.5	135.0
		SEH3048	12.00	304.80	4.5	135.0
3/4 19.5MM	3/8 9.5MM	SEH4004	1.00	25.40	140.0	350.0
		SEH4005	1.25	31.75	110.0	341.0
		SEH4006	1.50	38.10	89.0	338.2
		SEH4007	1.75	44.45	75.0	330.0
		SEH4008	2.00	50.80	66.0	330.0
		SEH4010	2.50	63.50	50.0	315.0
		SEH4012	3.00	76.20	40.5	303.8
		SEH4014	3.50	88.90	34.5	303.6
		SEH4016	4.00	101.60	30.0	300.0
		SEH4018	4.50	114.30	26.5	299.5
		SEH4020	5.00	127.00	23.5	293.8
		SEH4022	5.50	139.70	21.5	296.7
		SEH4024	6.00	152.40	19.5	292.5
		SEH4048	12.00	304.80	9.5	285.0
1" 25.5MM	1/2 13MM	SEH5006	1.50	38.10	160.0	608.0
		SEH5008	2.00	50.80	116.0	580.0
		SEH5010	2.50	63.50	89.6	564.5
		SEH5012	3.00	76.20	73.6	552.0
		SEH5014	3.50	88.90	62.4	549.1
		SEH5016	4.00	101.60	55.2	552.0
		SEH5018	4.50	114.30	48.8	551.4
		SEH5020	5.00	127.00	43.2	540.0
		SEH5024	6.00	152.40	36.0	540.0
		SEH5048	12.00	304.80	17.6	528.0

HOLE DIA	ROD DIA	ITEM NUMBER	FREE LENGTH INCH	FREE LENGTH MM	APPROX LOAD AT 1/10" DEFLEC. (LBS)	LOAD AT 25% DEFLEC. (LBS)**
1 1/4 32MM	5/8 16MM	SEH6008	2.00	50.80	205.0	1025.0
		SEH6010	2.50	63.50	152.5	960.8
		SEH6012	3.00	76.20	122.0	915.0
		SEH6014	3.50	88.90	108.5	954.8
		SEH6016	4.00	101.60	89.0	890.0
		SEH6018	4.50	114.30	83.5	943.6
		SEH6020	5.00	127.00	70.0	875.0
		SEH6024	6.00	152.40	57.5	862.5
		SEH6032	8.00	203.20	46.0	920.0
		SEH6040	10.00	254.00	34.5	862.5
		SEH6048	12.00	304.80	27.0	810.0
1 1/2 38.5MM	3/4 19.5MM	SEH7008	2.00	50.80	408.5	2042.5
		SEH7010	2.50	63.50	328.5	2069.6
		SEH7012	3.00	76.20	255.0	1912.5
		SEH7014	3.50	88.90	213.5	1878.8
		SEH7016	4.00	101.60	184.5	1845.0
		SEH7018	4.50	114.30	162.5	1836.3
		SEH7020	5.00	127.00	145.0	1812.5
		SEH7024	6.00	152.40	120.5	1807.5
		SEH7032	8.00	203.20	90.5	1810.0
		SEH7040	10.00	254.00	71.0	1775.0
		SEH7048	12.00	304.80	55.0	1650.0
2 51MM	1 25.5MM	SEH8010	2.50	63.50	411.0	2589.3
		SEH8012	3.00	76.20	319.0	2392.5
		SEH8014	3.50	88.90	276.4	2432.3
		SEH8016	4.00	101.60	231.1	2311.0
		SEH8018	4.50	114.30	188.8	2133.4
		SEH8020	5.00	127.00	180.4	2255.0
		SEH8024	6.00	152.40	147.3	2209.5
		SEH8032	8.00	203.20	111.6	2232.0
		SEH8040	10.00	254.00	84.0	2210.0
		SEH8048	12.00	304.80	71.2	2136.0

THE WORD "RAYMOND" AND THE GOLD, RED, GREEN AND BLUE COLOR CODING OF MOLD AND DIE SPRINGS IN THE HEAVY DUTY, MEDIUM HEAVY DUTY, EXTRA HEAVY DUTY AND MEDIUM DUTY LOAD RANGES, RESPECTIVELY, ARE REGISTERED TRADEMARKS OF THE BARNES GROUP, INC.

MOLD ASSEMBLY

Belleville Washers (Disc Springs) – METRIC

Belleville Washers (Disc Springs) – WZ8050

Rondanas Beleville | Rondelles Belleville
Anilhas Belleville | Tellerfedern



INFORMATION KEY:
D = Outside Diameter
F = Load Force in Newtons (at specified "S" Deflections)
G = Inside Diameter
H = Overall Height (of one unloaded washer)
J = Maximum Theoretical Deflection to flat
S = Deflection (shown for % of Maximum Theoretical Deflection J)
T = Thickness
Standard: DIN 2093
Material: DIN 50 CrV 4 (AISI 6150 Type) Steel
Max. Temp.: 300°C (572°F)
Dimensions: Shown in Millimeters (mm)

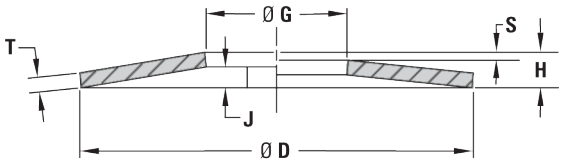

Spring Load versus Deflection Data

I Applications I Anwendungsbeispiele
n Toepassingen n Applications

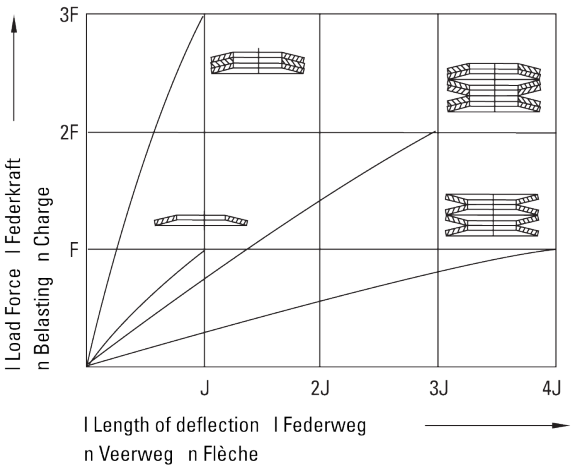

I Applications I Anwendungsbeispiele
n Toepassingen n Applications
(Progressive Type Application)

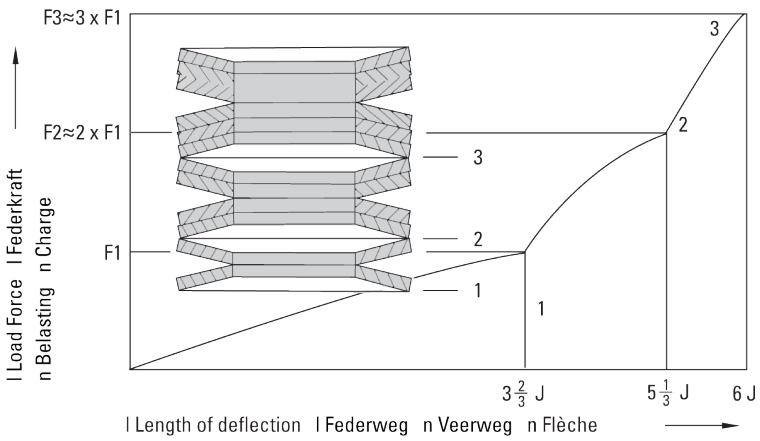

ITEM NUMBER	Ø D	Ø G	T	H	J	S = 0.25 X J		S = 0.5 X J		S = 0.75 X J		AVAIL
						S	F	S	F	S	F	
WZ8050 160 082 090	16.0	08.2	0.90	1.25	0.35	0.087	363	0.175	697	0.262	1013	⚡
WZ8050 180 092 100	18.0	09.2	1.00	1.40	0.4	0.1	451	0.2	865	0.3	1254	⚡
WZ8050 200 102 110	20.0	10.2	1.10	1.55	0.45	0.112	548	0.225	1050	0.337	1521	⚡
WZ8050 250 122 090	25.0	12.2	0.90	1.60	0.7	0.175	367	0.35	644	0.525	862	⚡
WZ8050 315 163 125	31.5	16.3	1.25	2.15	0.9	0.225	791	0.45	1409	0.675	1913	⚡
WZ8050 400 204 225	40.0	20.4	2.25	3.15	0.9	0.225	2336	0.45	4481	0.675	6500	⚡
WZ8050 500 254 250	50.0	25.4	2.50	3.90	1.4	0.35	3473	0.7	6437	1.05	9063	⚡
WZ8050 500 254 300	50.0	25.4	3.00	4.10	1.1	0.275	4255	0.55	8214	0.825	11,976	⚡

HOW TO ORDER: Specify Item Number. Omit spaces (spaces are only shown here for easier reading).

KEY TO CHART
⚡ **Items in stock**

MOLD ASSEMBLY

Codipro SEB Swivel Eyebolts



- Swivels under the load
- Equipped with an automatic position recovery system
- Tightens with Allen Wrench
- High WLL in all directions
- Optimizes orientation in the direction of the sling
- Standard in Metric and Inch
- Adaptor, centering feature and special thread options available as special order

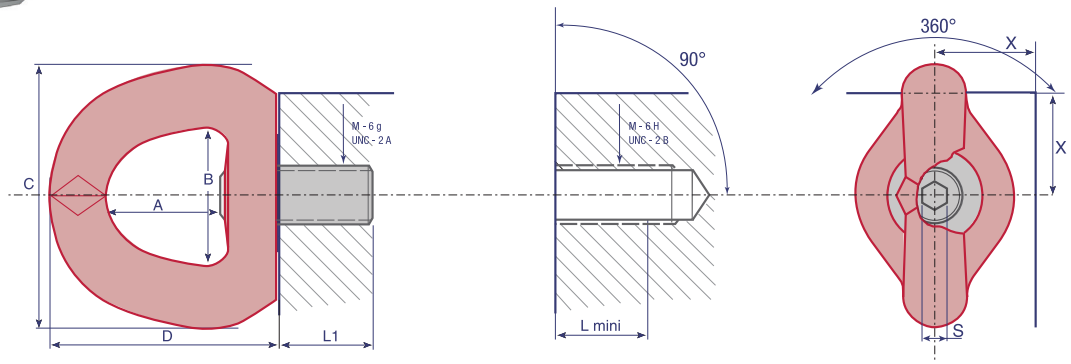

PART NUMBER	THREAD (DIAMETER)	SF 5:1 WLL (t)	SF 4:1 WLL (t)	STANDARD L_1 (mm)	TORQUE (Nm)	X	S (mm)	A (mm)	B (mm)	C (mm)	D (mm)	WEIGHT (KG)
SEBM8UP	M8 (x1.25)	0.40	0.50	14	6	20	6	30	34	60	57	0.24
SEBM10UP	M10 (x1.5)	0.50	0.70	17	10	20	6	30	34	60	57	0.24
SEBM12UP	M12 (x1.75)	0.80	0.90	21	15	20	6	30	34	60	57	0.24
SEBM16UP	M16 (x2)	1.40	1.80	27	50	35	8	38	45	88	80	0.8
SEBM20UP	M20 (x2.5)	2.00	2.70	30	100	35	8	38	45	88	80	0.8
SEBM243T8UP	M24 (x3)	3.20	3.80	36	160	35	14	38	45	88	80	0.8
SEBM244T2UP	M24 (x3)	3.40	4.20	36	160	50	14	58	70	115	106	2.6
SEBM30UP	M30 (x3.5)	5.50	6.30	45	250	50	14	58	70	115	106	2.7
SEBM36UP	M36 (x4)	9.00	11.00	54	320	70	14	83	94	168	155	7.0
SEBM42UP	M42 (x4.5)	12.00	15.00	63	400	70	14	83	94	168	155	7.0
SEBM48UP	M48 (x5)	15.00	16.00	68	600	70	19	80	94	168	155	7.0
PART NUMBER	DIAMETER -THREAD	SF 5:1 WLL (lbs)	SF 4:1 WLL (lbs)	STANDARD L_1 (mm)	TORQUE (foot/lbs)	X	S (mm)	A (mm)	B (mm)	C (mm)	D (mm)	WEIGHT (KG)
SEB3/8UP	UNC 3/8"-16	1200	1500	17	8	20	6	30	34	60	57	0.24
SEB1/2UP	UNC 1/2"-13	1800	1950	21	12	20	6	30	34	60	57	0.24
SEB5/8UP	UNC 5/8"-11	3200	4000	27	40	35	8	38	45	90	78	0.8
SEB3/4UP	UNC 3/4"-10	4750	5900	30	80	35	8	38	45	90	78	0.8
SEB1UP	UNC 1"-8	7500	9300	36	125	50	14	58	70	115	106	2.6
SEB11/4UP	UNC 1-1/4"-7	12,200	13,800	45	200	70	14	58	70	115	106	2.8
SEB11/2UP	UNC 1-1/2"-6	20,000	25,000	62	240	70	14	83	94	168	155	7.0

MOLD ASSEMBLY

Codipro DSR Double Swivel Rings

Specially Designed for Lifting and Turning Under Heavy Load



- Swivels under the load
- Designed for loads in rotation with Axial Shackle
- Two ways of tightening; open-ended spanner or allen key
- Axial shackle position
- Standard in Metric and Inch
- Stainless steel, adaptor, centering feature and special thread options available as special order

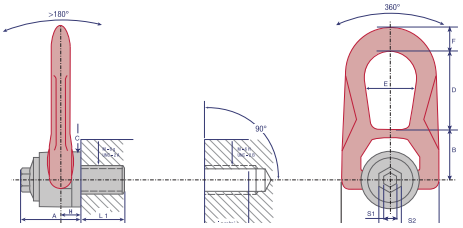

PART NUMBER	THREAD (DIAMETER)	SF 5:1 WLL (t)	SF 4:1 WLL (t)	STANDARD L1 (mm)	TORQUE N.m	S1 (mm)	S2 (mm)	A (mm)	B (mm)	C (mm)	D (mm)	E (mm)	F (mm)	G (mm)	H (mm)	WEIGHT (KG)
DSRM5UP	M5 (x0.8)	0.07	0.10	15	3	8	16	32	30	30	38	27	14	53	9.5	0.3
DSRM6UP	M6 (x1)	0.15	0.20	15	4	8	16	33	30	30	38	27	14	53	9.5	0.3
DSRM8UP	M8 (x1.25	0.40	0.50	15	6	8	16	33	30	30	38	27	14	53	9.5	0.3
DSRM10UP	M10 (x1.50)	0.70	0.90	18	10	8	16	33	30	30	38	27	14	53	9.5	0.3
DSRM12UP	M12 (x1.75)	1.05	1.30	21	15	8	16	33	30	30	38	27	14	53	9.5	0.3
DSRM14UP	M14 (x2)	1.40	1.80	23	30	8	20	45	40	45	53	38	17	76	13	0.9
DSRM16UP	M16 (x2)	2.00	2.30	27	50	8	20	45	40	45	53	38	17	76	13	0.9
DSRM18UP	M18 (x2.5)	2.30	2.30	27	70	8	20	45	40	45	53	38	17	76	13	0.9
DSRM202t5UP	M20 (x2.5)	2.50	2.50	30	100	8	20	45	40	45	53	38	17	76	13	0.9
DSRM203t2UP	M20 (x2.5)	2.90	3.20	25	100	14	24	62	55	60	83	55	25	115	19	2.6
DSRM22UP	M22 (X2.5)	3.50	4.50	33	120	14	24	62	55	60	83	55	25	115	19	2.6
DSRM24UP	M24 (X3)	4.40	5.50	36	160	14	24	62	55	60	83	55	25	115	19	2.6
DSRM27UP	M27 (X3)	5.70	6.00	40	200	14	24	62	55	60	83	55	25	115	19	2.7
DSRM306t3UP	M30 (x3.5)	6.00	6.30	45	250	14	24	62	55	60	83	55	25	115	19	2.7
DSRM308tUP	M30 (x3.5)	6.70	8.00	45	250	14	30	80	77	78	98	71	26	141	28	5.4
DSRM36UP	M36 (x4)	8.00	8.50	54	320	14	30	80	77	78	98	71	26	141	28	5.4
DSRM42UP	M42 (X4.5)	8.50	9.00	63	400	14	30	80	77	78	98	71	26	141	28	5.5
PART NUMBER	DIAMETER -THREAD	SF 5:1 WLL (lbs)	SF 4:1 WLL (lbs)	STANDARD L1 (mm)	TORQUE (ft/lbs)	S1 (mm)	S2 (mm)	A (mm)	B (mm)	C (mm)	D (mm)	E (mm)	F (mm)	G (mm)	H (mm)	WEIGHT (KG)
DSR1/4UP	UNC 1/4-20	330	450	13	3	8	16	32	30	30	38	27	14	53	9.5	0.3
DSR5/16UP	UNC 5/16-18	1,000	1,200	15	5	8	16	33	30	30	38	27	14	53	9.5	0.3
DSR3/8UP	UNC 3/8-16	1,300	1,600	17	8	8	16	33	30	30	38	27	14	53	9.5	0.3
DSR1/2UP	UNC 1/2-13	2,400	2,800	21	12	8	16	33	30	30	38	27	14	53	9.5	0.3
DSR5/8UP	UNC 5/8-11	3,900	4,900	27	40	8	20	45	40	45	53	38	17	76	13	0.9
DSR3/4UP	UNC 3/4-10	5,250	5,250	30	80	8	20	45	40	45	53	38	17	76	13	0.9
DSR7/8UP	UNC 7/8-9	7,900	9,800	33	90	14	24	62	55	60	83	55	25	115	19	2.5
DSR1UP	UNC 1-8	11,200	12,500	36	125	14	24	62	55	60	83	55	25	115	19	2.6
DSR11/8UP	UNC 1-1/8-7	11,500	13,000	42	160	14	24	62	55	60	83	55	25	115	19	2.6
DSR11/4UP	UNC 1-1/8-7	13,500	13,500	45	200	14	24	62	55	60	83	55	25	115	19	2.7

MOLD ASSEMBLY

Codipro DSS Double Swivel Shackle

Specially Designed for Lifting and Turning Under Heavy Load



Gradup

- Large shackle for easy secure connection directly to crane hook
- Compact and Ergonomic; requires less clearance
- Tightens with allen wrench
- Double articulation allows perfect alignment with the sling
- Standard in Metric and Inch
- Stainless Steel, adaptor and special thread options available as special order

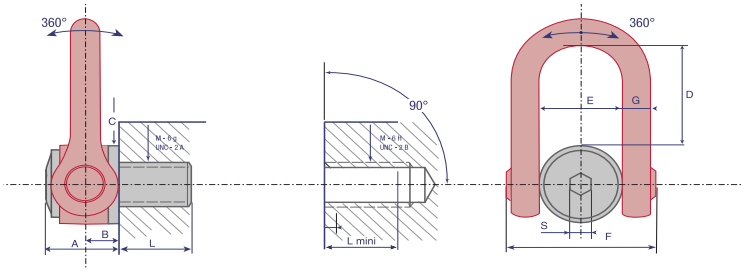

PART NUMBER	THREAD (DIAMETER)	SF 5:1 WLL (lbs)	SF 4:1 WLL (lbs)	STANDARD L1 (mm)	TORQUE (foot/lbs)	S (mm)	A (mm)	B (mm)	C (mm)	D (mm)	E (mm)	F (mm)	G (mm)	WEIGHT (KG)
DSSM24UP	M24 (x3)	4.50	5.50	36	160	19	61	31	70	104	73	149	33	5.4
DSSM30UP	M30 (x3.5)	7.70	8.50	45	250	19	61	31	70	104	73	149	33	5.5
DSSM33UP	M33 (x3.5)	8.50	10.50	50	250	19	61	31	70	104	73	149	33	5.5
DSSM36UP	M36 (x4)	11.00	12.00	54	320	19	61	31	70	104	73	149	33	5.5
DSSM36X3UP	M36 (x3)	11.00	12.00	54	320	19	61	31	70	104	73	149	33	5.5
DSSM39UP	M39 (x4)	12.00	14.00	58	320	19	61	31	70	104	73	149	33	5.7
DSSM42UP	M42 (4.5)	13.00	15.00	63	400	19	61	31	70	104	73	149	33	5.8
DSSM42X3UP	M42 (x3)	13.00	15.00	63	400	19	61	31	70	104	73	149	33	5.8
DSSM45UP	M45 (x4.5)	14.50	16.00	63	400	19	61	31	70	104	73	149	33	5.9
DSSM48UP	M48(x5)	17.00	20.00	68	600	19	79	38	90	125	91	182	45	11.0
DSSM48X3UP	M48(x3)	17.00	20.00	68	600	19	79	38	90	125	91	182	45	11.0
DSSM48X4UP	M48(x4)	17.00	20.00	68	600	19	79	38	90	125	91	182	45	11.0
DSSM52UP	M52 (x5)	19.00	20.00	68	600	19	79	38	90	125	91	182	45	11.2
DSSM56UP	M56 (x5.5)	22.00	25.00	78	600	19	79	38	90	125	91	182	45	11.3
DSSM56X4UP	M56 (x4)	22.00	25.00	78	600	19	79	38	90	125	91	182	45	11.4
DSSM64UP	M64 (x6)	25.00	32.10	90	600	19	79	38	95	125	91	182	45	12.2
DSSM64X4UP	M64 (x4)	25.00	32.10	90	600	19	79	38	95	125	91	182	45	12.2
DSSM72UP	M72 (x6)	22.00	25.00	90	600	19	79	38	95	125	91	182	45	14.0
DSSM72X4UP	M72 (x4)	22.00	25.00	90	600	19	79	38	95	125	91	182	45	14.0
DSSM80UP	M80 (x6)	25.00	32.10	90	600	19	79	38	100	125	91	182	45	15.0
DSSM90UP	M90 (x6)	25.00	32.10	90	600	19	79	38	100	125	91	182	45	15.5
DSSM100UP	M100 (x6)	25.00	32.10	90	600	19	79	38	110	125	91	182	45	16.50
PART NUMBER	DIAMETER -THREAD	SF 5:1 WLL (lbs)	SF 4:1 WLL (lbs)	STANDARD L1 (mm)	TORQUE (foot/lbs)	S (mm)	A (mm)	B (mm)	C (mm)	D (mm)	E (mm)	F (mm)	G (mm)	WEIGHT (KG)
DSS1UP	UNC 1"-8	10,000	13,000	36	125	19	61	31	70	104	73	149	33	5.4
DSS11/4UP	UNC 1-1/4"-7	15,000	19,000	45	200	19	61	31	70	104	73	149	33	5.4
DSS13/8UP	UNC 1- 3/8"-6	21,000	22,000	54	240	19	61	31	70	104	73	149	33	5.4
DSS11/2UP	UNC 1-1/2"-6	22,000	27,000	54	240	19	61	31	70	104	73	149	33	5.4
DSS13/4UP	UNC 1-3/4"-5	27,000	33,000	63	300	19	61	31	70	104	73	149	33	5.4
DSS2UP	UNC 2"- 4 1/2	38,000	50,000	76	450	19	79	38	90	125	91	182	45	11.1
DSS21/2UP	UNC 2-1/2"-4	48,500	53,000	90	450	19	79	38	95	125	91	182	45	12.2

MOLD ASSEMBLY

Codipro MEGADSS Double Swivel Shackle

Specially Designed for Lifting and Turning Under Heavy Load



Gradup

- Large shackle for easy secure connection directly to crane hook
- Compact and Ergonomic; requires less clearance
- Tightens with allen wrench
- Double articulation allows perfect alignment with the sling
- Standard in Metric and Inch
- Stainless Steel, adaptor and special thread options available as special order

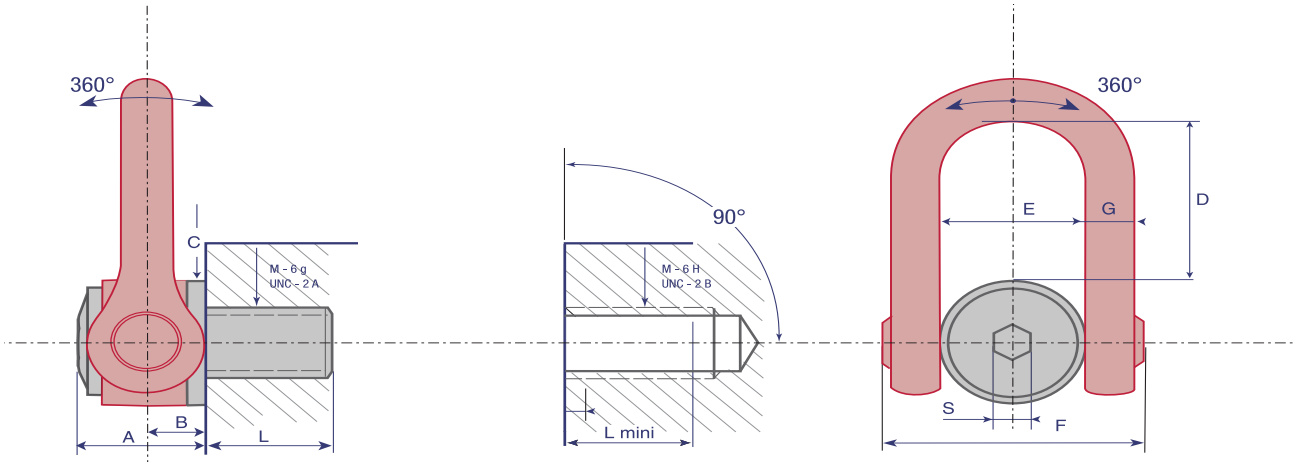

PART NUMBER	THREAD (DIAMETER)	SF 5:1 WLL (lbs)	SF 4:1 WLL (lbs)	STANDARD L1 (mm)	TORQUE (foot/lbs)	S (mm)	A (mm)	B (mm)	C (mm)	D (mm)	E (mm)	F (mm)	G (mm)	WEIGHT (KG)
MEGADSSM64UP	M64 (x6)	26.00	33.00	100	600	36	127	64	140	195	143	278	69	42.0
MEGADSSM72UP	M72 (x6)	28.00	35.00	110	700	36	127	64	140	195	143	278	69	43.0
MEGADSSM72X4UP	M72 (x4)	28.00	35.00	110	700	36	127	64	140	195	143	278	69	43.0
MEGADSSM80UP	M80 (x6)	32.00	40.00	120	800	36	127	64	140	195	143	278	69	44.5
MEGADSSM90UP	M90 (x6)	36.00	45.00	135	900	36	127	64	140	195	143	278	69	46.5
MEGADSSM100UP	M100 (x6)	48.00	60.00	150	1000	36	127	64	140	195	143	278	69	49.0
PART NUMBER	DIAMETER -THREAD	SF 5:1 WLL (lbs)	SF 4:1 WLL (lbs)	STANDARD L1 (mm)	TORQUE (foot/lbs)	S (mm)	A (mm)	B (mm)	C (mm)	D (mm)	E (mm)	F (mm)	G (mm)	WEIGHT (KG)
MEGADSS23/4UP	UNC 2-3/4" - 4	60,000	75,000	105	520	36	127	64	140	195	143	278	69	42.5
MEGADSS3UP	UNC 3" - 4	64,000	80,000	115	520	36	127	64	140	195	143	278	69	43.0
MEGADSS31/4UP	UNC 3-1/4" - 4	72,000	90,000	125	590	36	127	64	140	195	143	278	69	44.5
MEGADSS31/2UP	UNC 3-1/2" - 4	76,000	95,000	135	665	36	127	64	140	195	143	278	69	46.0
MEGADSS33/4UP	UNC 3-3/4" - 4	80,000	100,000	145	740	36	127	64	140	195	143	278	69	47.0
MEGADSS4UP	UNC 4" - 4	88,000	110,000	150	740	36	127	64	140	195	143	278	69	49.0

MOLD ASSEMBLY

Codipro DSS Double Swivel Shackle

Specially Designed for Lifting and Turning Loads up to metric 55 tons

- Large eye on the shackle for easy connections
- Compact and Ergonomic base; requires less clearance
- Easy to attach and use
- Individual engraving
- Delivered with a certificate of conformity for each shackle



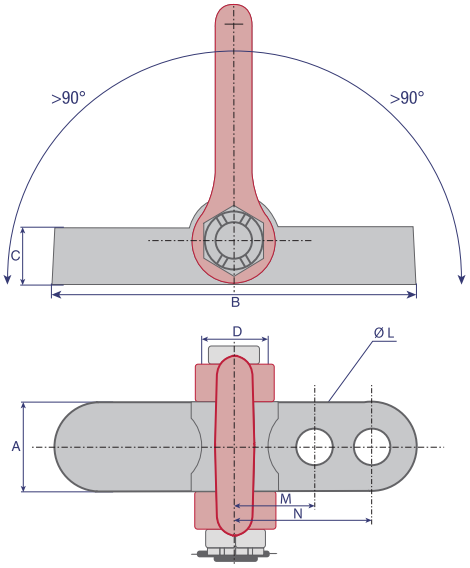

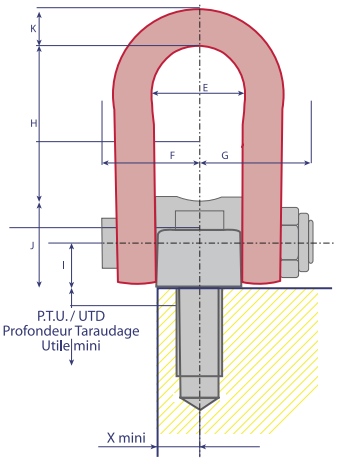

PART NUMBER	WORK LOAD LIMIT (TO)	X mini	A	B	C	D	E	F	G	H	I	J	K
CSS20T	44,000	40	80	220	50	62	90	88	98	132	38	76	41
CSS32T	70,950	40	80	330	50	62	90	88	98	132	38	76	41
CSS55T	121,000	53	105	540	85	175	184	160	170	267	85	175	79.5

Drilling and screw specifications
DIN912-12.9

PART NUMBER	DRILLING			PTU/UTD	SCREW					
	Ø L	M	N	USEFUL MIN THREAD DEPTH	QTY	THREAD	LENGTH	HEAD Ø	HEAD HEIGHT	N.m
CSS20T	38	70	/	54	2	M36	100	54	36	600
CSS32T	38	70	130	54	4	M36	100	54	36	600
CSS55T	50	133	210	85	4	M48	160	72	48	600

MOLD ASSEMBLY

Hoist Rings – INCH

Whether you're hoisting an 800-pound mold base or a 15,000-pound piece of molding room equipment, DME Hoist Rings can add a margin of performance and convenience to the job at hand. The inherent danger posed by conventional static eyebolts (side-load breakage and hook disengagement) combined with stricter safety regulations make DME Hoist Rings an important addition to any mold shop or molding plant. Unlike eyebolts, these Hoist Rings will not yield to heavy side loads within their rated capacity and can pivot 180° and swivel 360° to compensate for pitch, roll and sway when lifting heavy, unbalanced loads. As with all mechanical devices, regular inspection for wear, and strict adherence to installation and operating guidelines is necessary to prevent failure due to misuse.

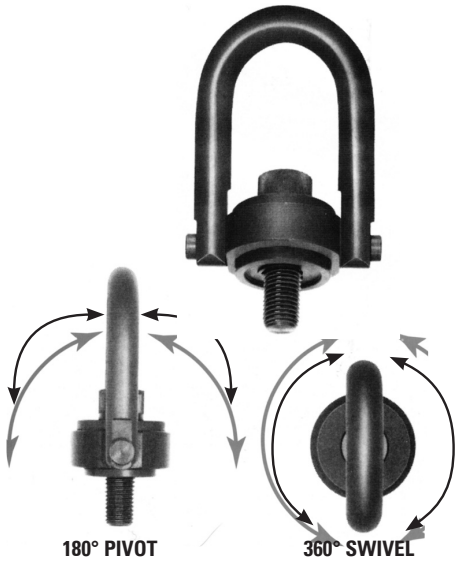

- Safer and stronger than conventional eyebolts
- Pivots and swivels to compensate for pitch, roll and sway when lifting heavy or unbalanced loads
- Prevents accidents caused by eyebolt breakage or lifting hook disengagement
- Will not yield to heavy side loads when used in accordance with manufacturer's instructions
- Manufactured from high-quality alloy steel (certified heat treatment)
- Meets or exceeds MIL-STD-1365 (OR-11) and MIL-STD-209C
- Seven sizes to handle loads from 800 to 15,000 pounds
- Safety factor is 5 times the rated load capacity in any direction

See what happens when heavy side loads are applied to a conventional eyebolt.

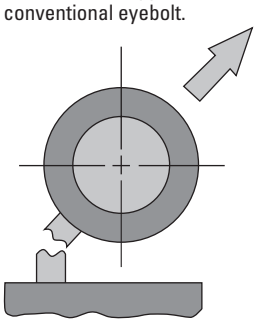

EXCESSIVE SIDE LOADS CAN CAUSE BOLT FAILURE.

The same load applied to a DME Hoist Ring is translated into a primary tension load at the bolt and normal to the bolt axis.

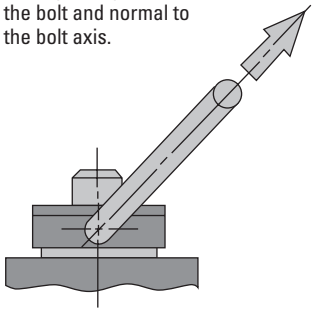

HIGH-TENSION LOADS ARE WELL WITHIN THE DESIGNED SAFETY LIMITS OF THE STRESSED HOIST RING.



MOLD ASSEMBLY

Hoist Rings – INCH Installation and Ordering Information

Material: Alloy steel (certified heat treatment), black oxide
Safety Factor: 5 times rated load in any direction
Range of Movement.: 360° swivel; 180° pivot
Dimensions: Shown in inches (in)

Installation Data

Tap workpiece for hoist ring bolt with axis vertical to mounting surface. Work surface should be flat and smooth to provide full 360° flush seating for the bushing flange. For installation in ferrous materials, the screw should be tightened to the full torque loading recommended in column TL below, +25% – 0.

(SAFETY NOTE: Some loosening may develop after prolonged service in a permanent installation. It is advisable to periodically retighten the mounting bolt to maintain the specified torque value.) For maximum safety with soft metal workpieces such as aluminum, use extra length bolts with minimum effective thread engagement of 2 times thread diameter. The use of free fit spacers between the bushing flange and mounting surface is not recommended, as this will reduce the safe load rating on angularly applied loads. Hoist ring must be free to swivel 360° and pivot 180° at all times.

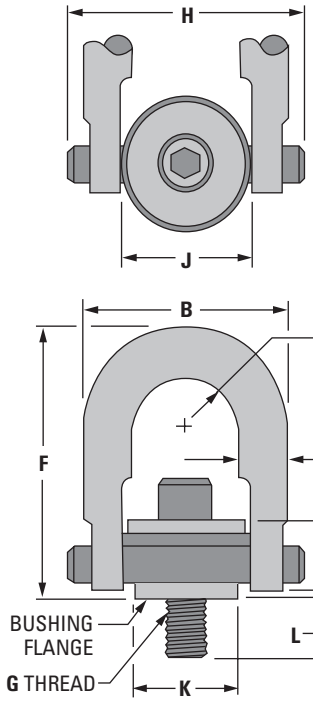

NOTE: Additional hoist ring sizes and bolt lengths (including metric versions) are also available on request.

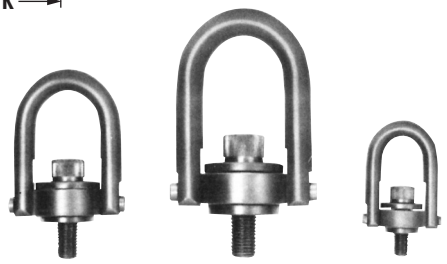

Hoist Rings – SHR (includes bolt and retaining ring)

ITEM NUMBER	RATED LOAD (LBS)	A RADIUS	B	C	Ø D	E EFFECTIVE THREAD PROJECTION	F	G	H CLEARANCE DIMENSION	J	K	L	TL** FOOT LBS	WEIGHT
SHR0001	800	7/16	1 5/8	41/64	3/8	9/16	2 5/8	5/16-18	2	1	3/4	3/32	7	5 OZ.
SHR0002	1,000	7/16	1 5/8	41/64	3/8	9/16	2 5/8	3/8-16	2	1	3/4	3/32	12	5 OZ.
SHR0003	2,500	7/8	3 1/4	1 53/32	3/4	3/4	4 3/4	1/2-13	3 3/8	2	1 1/2	3/32	28	2 LB. 5 OZ.
SHR0004	4,000	7/8	3 1/4	1 53/32	3/4	1	4 3/4	5/8-11	3 3/8	2	1 1/2	3/32	60	2 LB. 7 OZ.
SHR0005	5,000	7/8	3 1/4	1 53/32	3/4	1	4 3/4	3/4-10	3 3/8	2	1 1/2	3/32	100	2 LB. 9 OZ.
SHR0006	10,000	1 13/32	4 13/16	1 11/16	1	1 1/2	6 1/2	1"-8	5 1/8	3	2 5/16	17/64	230	7 LB.
SHR0007	15,000	1 3/4	6	2 1/8	1 1/4	1 7/8	8 3/4	1 1/4-7	6 1/2	3 3/4	3 1/4	11/32	470	14 LB.

**Recommended torque load +25% – 0

Replacement Bolt Kits – SHK (includes bolt and retaining ring)

ITEM NUMBER	USED WITH	SIZE	E
SHK0001	SHR0001	5/16 -18 X 1 1/4	9/16
SHK0002	SHR0002	3/8 -16 X 1 1/4	9/16
SHK0003	SHR0003	1/2 -13 X 2	3/4
*SHK0004		1/2 -13 X 2 1/4	1
SHK0005	SHR0004	5/8 -11 X 2 1/4	1
*SHK0006		5/8 -11 X 2 1/2	1 1/4
SHK0007	SHR0005	3/4 -10 X 2 1/4	1
*SHK0008		3/4 -10 X 2 3/4	1 1/2
SHK0009	SHR0006	1"-8 X 3 1/4	1 1/2
*SHK0010		1"-8 X 3 3/4	2
SHK0011	SHR0007	1 1/4 -7 X 4	1 7/8



NOTES:
E = Effective Thread Projection
*Bolts not marked with an asterisk (*) are identical to those supplied with hoist rings. Bolts marked with an asterisk are longer, to provide thread projection of twice the bolt diameter, recommended for use with softer metals.

MOLD ASSEMBLY

Hoist Rings – METRIC

Hoist Rings – SHM, SHMR

Anillos elevadores | Olhais de suspensão articulados | Anneaux de levage articulés | Sicherheitsringschrauben

INFORMATION KEY:
A = U-Bar Inside Radius
B = Inside U-Bar Clearance
D = U-Bar Diameter
E = Thread Length Projection
F = U-Bar Height
G = Thread Diameter and Pitch
H = Dimension Over Pins
K = Flange Diameter
Material: See Features below
Max. Temp.: 200°C (392°F)
Dimensions: Shown in Millimeters (mm)

HOIST RING ASSEMBLY												REPLACEMENT KIT	
ITEM NUMBER	A	B	D	E	F	G	H	K	TL* (Kgm)	P* (Kg)	W* (Kg)	ITEM NUMBER	G
SHM 0001	10.9	32.0	9.7	12.5	67.8	M8 X 1.25	46.7	19.0	1.0	400	0.17	SHMR 0001	M8 X 1.25
SHM 0002	10.9	30.0	9.7	17.5	67.8	M10 X 1.50	46.7	19.0	1.7	450	0.17	SHMR 0002	M10 X 1.50
SHM 0003	22.4	60.5	19.0	19.0	121.4	M12 X 1.75	89.4	38.1	3.8	1050	1.08	SHMR 0003	M12 X 1.75
SHM 0004	22.4	56.5	19.0	29.0	121.4	M16 X 2.00	89.4	38.1	8.2	1900	1.12	SHMR 0004	M16 X 2.00
SHM 0005	22.4	52.5	19.0	34.0	121.4	M20 X 2.50	89.4	38.1	13.6	2150	1.19	SHMR 0005	M20 X 2.50
SHM 0006	35.6	69.0	25.4	37.0	165.6	M24 X 3.00	130.6	58.7	31.0	4200	3.10	SHMR 0006	M24 X 3.00
SHM 0007	44.5	107.4	31.7	41.9	221.7	M30 X 3.50	165.1	81.0	60.0	7000	6.30	SHMR 0007	M30 X 3.50
SHM 0009	57.2	166.5	44.4	63.5	316.7	M36 X 4.00	217.2	106.4	100.0	11000	15.50	SHMR 0009	M36 X 4.00
SHM 0010	57.2	160.5	44.4	68.0	316.7	M42 X 4.50	217.2	106.4	100.0	12500	16.00	SHMR 0010	M42 X 4.50
SHM 0011	57.2	154.5	44.4	82.4	316.7	M48 X 5.00	217.2	106.4	100.0	13500	16.80	SHMR 0011	M48 X 5.00
SHM 0012	76.2	210.0	57.15	101.6	419.1	M64 X 6.00	297.6	146.0	290.0	22500	40.0	SHMR 0012	M64 X 6.00

HOW TO ORDER: specify Item Number. Omit spaces (spaces are only shown here for easier reading).
NOTE: All hoist ring assemblies and replacement kits listed in chart are in stock. (No specials available.)

REPLACEMENT KIT INCLUDES SCREW AND RETAINING RING

FEATURES
- Pivots and swivels to compensate for pitch, roll and sway when lifting heavy or unbalanced loads.
- High-strength alloy steel with minimum tensile strength of 1,250 MPa (125 kg/mm²).
- Certified heat treatment with 100% Magnaflux inspection.
- Corrosion-resistant plating.
- Maximum operating temperature 200°C (392°F).
- Safety factor is 5 times the rated load in any direction.

***NOTE**
- Standard tolerance ± 0.8mm.
- **E** = the use of spacers between bushing flange and mounting surface is not recommended as this will reduce the safety load rating.
- **TL** = recommended torque load + 25% - 0.
- **P** = rated.
- **W** = weight (of Hoist Ring Assembly)

CARACTERíSTICAS
- Gira y pivotea para compensar la inclinación, el rodaje y la oscilación al levantar cargas pesadas o sin equilibrio.
- Aleación de acero de gran resistencia con fuerza elástica mínima de 1,250 MPa (125 kg/mm²).
- Tratamiento de calor certificado con inspección Magnaflux del 100%.
- Enchapado resistente a la corrosión.
- Temperatura máxima de operacion: 200°C.
- El factor de seguridad es 5 veces la carga calificada en cualquier direccion.

***NOTA**
- Tolerancia estándar ±0.8mm.
- **E** = el uso de espaciadores entre el reborde del cojinete y la superficie de montaje no se recomienda ya que esto reducirá la calificación de seguridad de la carga.
- **TL** = carga de torsión recomendada + 25% - 0.
- **P** = carga nominal.
- **W** = peso.

MERKMALE
- Gleichmäßiges anheben von schweren oder einseitigen Lasten durch Drehgelenke und Abstandsausgleichung. Keine Abweichung nach der schweren Lastseite.
- Legierter Spezialstahl mit min. Streckgrenze von 1.250 MPa (125 Kg/mm²)
- Beglaubigte Wärmebehandlung mit 100% iger Magnaflux.
- Kontrolle Korrosionsbeständiger Oberflächenschutz.
- Alle Materialangaben gelten bis zu einer Temp. bis max. 200°C.
- Alle Heberinge sind in allen Richtungen mit 5-facher Sicherheit ausgelegt.

***BEMERKUNGEN**
- Allgemeine Toleranzen ± 0.8mm.
- **E** = zwischen Flansch und Montageoberfläche keine Distanzscheibe einlegen: dadurch wird die Sicherheit der Hebeleistun g reduziert.
- **TL** = empfohlene Drehmomentbelastung.
- **P** = Nennlast.
- **W** = Gewicht.

CARACTÉRISTIQUES
- Ils pivotent et tournent pour amortir le balancement des charges lourdes ou deséquilibrées. Résistent aux charges latérales.
- Acier allié avec une résistance de 1.250 MPa (125 kg/mm²).
- Une trempe garantie par une inspection Magnaflux de 100%.
- Résiste à la corrosion grâce à un traitement de surface.
- Température de fonctionnement 200°C.
- Coefficient de sécurité 5:1 quelle que soit l'orientation de la charge.

***NOTE**
- Tolérance standard ± 0.8 mm.
- **E** = L'emploi d'une rondelle de réglage entre l'anneau et la surface d'appui est à déconseiller. Elle réduirait le coefficient de sécurité.
- **TL** = couple de serrage + 25% - 0.
- **P** = charge maximum.
- **W** = Poids en kg.

CARACTERíSTICAS
- Eles se articulam e giram para compensar a inclinação, rolagem e balanço de cargas pesadas ou desequilibradas.
- Liga de aço de alta resistencia de 1.250 MPa (125 kg/mm²).
- Tratamento a calor, certificado por inspeção 100% Magnaflux.
- Revestimento resistente à corrosão.
- Temperatura máxima operacional de 200°C.
- Coeficiente de segurança de 5 vezes a carga nominal, em qualquer direção.

***NOTA**
- Tolerancia padrão: ± 0.8mm.
- **E** = nao se recomenda o uso de espaçadores entre o flange da bucha e a superficie de montagem, pois isto reduziria o valor da carga nominal de segurança.
- **TL** = carga recomendada de torque + 25% - 0.
- **P** = carga nominal.
- **W** = peso.

MOLD ASSEMBLY

Forged Eyebolts

- High-quality U.S. forged eye bolts
- Shoulder design
- Shows full engagement
- Huge savings, always in stock!

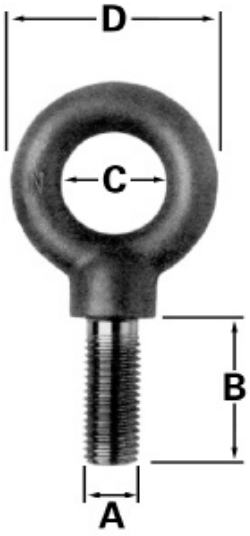

Material: C1030 steel, forged, heat-treated, quenched and drawn
Tensile strength: 65,000 PSI min.
Yield strength: 50,000 PSI min.
Elongation: 30% min.
Reduction of area: 60% min.

Warning: Rated capacity is substantially reduced when loading at any angle greater than 45° from bolt centerline. At an angle of 45°, rated capacity is reduced to 1/4 of shown rating.

U.S. Thread (UNC-2A)			A-B-C-D (refer to photo)			
Part Number	Reference #	Safe Working Load [lbs]	Thread Size "A"	Shank Lgth "B"	Eye I.D. "C"	Eye O.D. "D"
EB250	EB21	500	1/4-20	1"	3/4"	1 3/16"
EB312	EB22	900	5/16-18	1 1/8"	7/8"	1 7/8"
EB375	EB23	1300	3/8-16	1 1/4"	1"	1 11/16"
EB437	EB24	1800	7/16-14	1 3/8"	1 1/16"	1 13/16"
EB500	EB25	2400	1/2-13	1 1/2"	1 3/16"	2 1/8"
EB625	EB27	4000	5/8-11	1 3/4"	1 3/8"	2 9/16"
EB750	EB28	5000	3/4-10	2"	1 1/2"	2 13/16"
EB875	EB29	7000	7/8-9	2 1/4"	1 5/8"	3 3/16"
EB1000	EB30	9000	1–8	2 1/2"	1 13/16"	3 9/16"
EB1125	EB31	12000	1 1/8-7	2 3/4"	2"	4 1/16"
EB1250	EB32	15000	1 1/4-7	3"	2 3/16"	4 7/16"
EB1500	EB34	21000	1 1/2-6	3 1/2"	2 1/2"	5 3/16"
EB1750	–	28000	1 3/4-5	3 3/4"	2 7/8"	6"
EB2000	–	38000	2–4 1/2	4"	3 1/4"	6 7/8"

Metric Sizes			A-B-C-D (refer to photo)			
Part Number	Reference #	Safe Working Load [lbs]	Thread Size "A"	Shank Lgth "B"	Eye I.D. "C"	Eye O.D. "D"
EBM6	EBM6	210	M6 x 1.00	12 mm	19 mm	30 mm
EBM8	EBM8	500	M8 × 1.25	16 mm	25 mm	43 mm
EBM10	EBM10	740	M10 × 1.5	20 mm	27 mm	46.0 mm
EBM12	EBM12	1030	M12 × 1.75	24 mm	30 mm	54.0 mm
EBM16	EBM16	1600	M16 × 2.0	32 mm	35 mm	65.0 mm
EBM20	EBM20	2860	M20 × 2.5	40 mm	41 mm	81.0 mm
EBM24	EBM24	3850	M24 × 3.0	48 mm	46 mm	90.4 mm
EBM30	EBM30	6400	M30 × 3.5	60 mm	55 mm	112.7 mm
EBM36	EBM36	8970	M36 × 4.0	72 mm	63 mm	131.8 mm
EBM42	–	11960	M42 × 4.5	84 mm	73 mm	152.4 mm
EBM48	–	16400	M48 × 5.0	96 mm	82 mm	174.6 mm

MOLD ASSEMBLY

Permanent Magnetic Lifters

Bunting® MagLift Permanent Magnetic Lifters are powered by blocks of high-energy neodymium magnetic material. Switching is achieved by making one of these blocks reversible. In the "on" position, the reversible block is in parallel with the static blocks so that a concentrated magnetic field is produced at the pole feet for lifting. In the "off" position, the reversible block is rotated through 180° to provide a total magnetic short circuit within the lifter body.



Force/Air Gap Curve – Hand Controlled

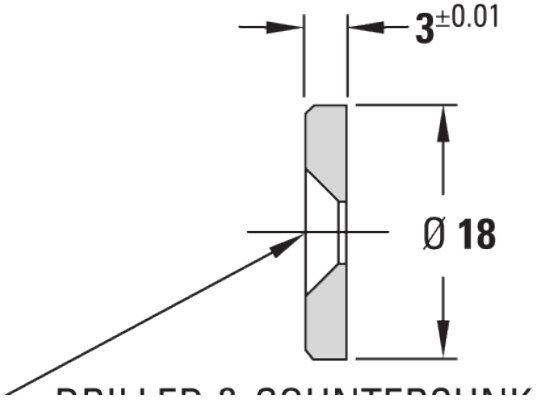

Standard Magnetic Lifter

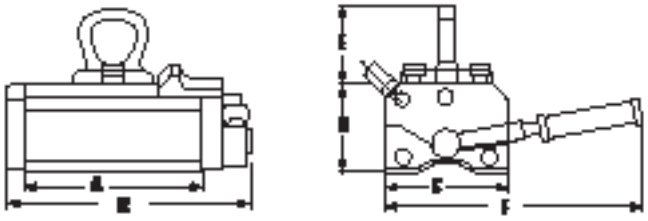

Model	Lifter Weight (lbs)	Dimensions A (in)	B (in)	C (in)	D (in)	E (in)	F (in)	Flat Section Safe Work Load (lbs)	Min. Thick-ness (in)	Max Length (inches)	Round Section Safe Work Load (lbs)	Max Dia-meter (in)	Max Length (in)
MAGLIFT275	9.9	4.3	5.9	3.0	2.4	2.1	5.9	275	0.6	60	110	10	60
MAGLIFT550	18.7	6.5	8.3	3.5	2.8	3.0	7.9	550	0.8	60	220	12	60
MAGLIFT1100	38.5	8.9	11.1	4.2	3.5	4.1	9.6	1100	1.0	80	440	16	80
MAGLIFT2200	80.3	12.8	15.4	5.4	4.1	4.4	14.4	2200	1.4	120	880	18	120
MAGLIFT4400	173.8	15.7	19.0	7.3	5.2	6.7	20.7	4400	2.8	120	1760	24	120

MOLD ASSEMBLY

CHAIN SLINGS

- Sling Hooks & Self Locking Hooks available
- Grade 100 chain slings tagged with sling type, Grade, size and working load limit
- Tested and CE certified before shipment



CLEVIS SAFETY HOOK



CLEVIS SLING HOOK WITH LATCH

Other lengths and hook types available upon request.

CE

Single Leg Chain Sling with Adjuster & Hooks*

CHAIN SLINGS ARE BEING OBSOLETED.
LIMITED STOCK AVAILABLE

ITEM NUMBER	SIZE	MM	WLL 90°	DESCRIPTION
ASOS516X5	5/16"	8MM	5,500LBS	5' SINGLE LEG 5/16 W/ ADJ & SLING HOOKS
ASOS38X5	3/8"	10MM	8,800LBS	5' SINGLE LEG 3/8" W/ ADJ & SLING HOOKS
ASOS12X5	1/2"	13MM	14,700LBS	5' SINGLE LEG 1/2" W/ ADJ & SLING HOOKS
ASOS58X5	5/8"	16MM	22,000LBS	5' SINGLE LEG 5/8" W/ ADJ & SLING HOOKS
ASOS34X5	3/4"	20MM	35,200LBS	5' SINGLE LEG 3/4" W/ ADJ & SLING HOOKS
ASOSL516X5	5/16"	8MM	5,500LBS	5' SINGLE LEG 5/16 W/ ADJ & SELF LOCKING HOOKS
ASOSL38X5	3/8"	10MM	8,800LBS	5' SINGLE LEG 3/8" W/ ADJ & SELF LOCKING HOOKS
ASOSL12X5	1/2"	13MM	14,700LBS	5' SINGLE LEG 1/2" W/ ADJ & SELF LOCKING HOOKS
ASOSL58X5	5/8"	16MM	22,000LBS	5' SINGLE LEG 5/8" W/ ADJ & SELF LOCKING HOOKS
ASOSL34X5	3/4"	20MM	35,200LBS	5' SINGLE LEG 3/4" W/ ADJ & SELF LOCKING HOOKS

DOUBLE Leg Chain Sling with Adjuster & Hooks*



ITEM NUMBER	SIZE	MM	WLL 60°	WLL 45°	WLL 30°	DESCRIPTION
ADOS516X5	5/16"	8MM	9,500LBS	7,800LBS	5,400LBS	5' DOUBLE LEG 5/16 W/ ADJ & SLING HOOKS
ADOS38X5	3/8"	10MM	15,000LBS	12,300LBS	8,600LBS	5' DOUBLE LEG 3/8" W/ ADJ & SLING HOOKS
ADOS12X5	1/2"	13MM	25,500LBS	20,900LBS	14,600LBS	5' DOUBLE LEG 1/2" W/ ADJ & SLING HOOKS
ADOS58X5	5/8"	16MM	37,500LBS	30,800LBS	21,500LBS	5' DOUBLE LEG 5/8" W/ ADJ & SLING HOOKS
ADOS34X5	3/4"	20MM	60,100LBS	49,300LBS	34,500LBS	5' DOUBLE LEG 3/4" W/ ADJ & SLING HOOKS
ADOSL516X5	5/16"	8MM	9,500LBS	7,800LBS	5,400LBS	5' DOUBLE LEG 9/32 W/ ADJ & SELF LOCKING HOOKS
ADOSL38X5	3/8"	10MM	15,000LBS	12,300LBS	8,600LBS	5' DOUBLE LEG 3/8" W/ ADJ & SELF LOCKING HOOKS
ADOSL12X5	1/2"	13MM	25,500LBS	20,900LBS	14,600LBS	5' DOUBLE LEG 1/2" W/ ADJ & SELF LOCKING HOOKS
ADOSL58X5	5/8"	16MM	37,500LBS	30,800LBS	21,500LBS	5' DOUBLE LEG 5/8" W/ ADJ & SELF LOCKING HOOKS
ADOSL34X5	3/4"	20MM	60,100LBS	49,300LBS	34,500LBS	5' DOUBLE LEG 3/4" W/ ADJ & SELF LOCKING HOOKS

Triple Leg Chain Sling with Adjuster & Hooks*

ITEM NUMBER	SIZE	MM	WLL 60°	WLL 45°	WLL 30°	DESCRIPTION
ATOS516X5	5/16"	8MM	14,100LBS	11,600LBS	8,100LBS	5' TRIPLE LEG 5/16 W/ ADJ & SLING HOOKS
ATOS38X5	3/8"	10MM	21,400LBS	17,600LBS	12,300LBS	5' TRIPLE LEG 3/8" W/ ADJ & SLING HOOKS
ATOS12X5	1/2"	13MM	37,500LBS	30,800LBS	21,500LBS	5' TRIPLE LEG 1/2" W/ ADJ & SLING HOOKS
ATOS58X5	5/8"	16MM	56,900LBS	46,700LBS	32,700LBS	5' TRIPLE LEG 5/8" W/ ADJ & SLING HOOKS
ATOS34X5	3/4"	20MM	90,280LBS	74,000LBS	51,800LBS	5' TRIPLE LEG 3/4" W/ ADJ & SLING HOOKS
ATOSL516X5	5/16"	8MM	14,100LBS	11,600LBS	8,100LBS	5' TRIPLE LEG 5/16 W/ ADJ & SELF LOCKING HOOKS
ATOSL38X5	3/8"	10MM	21,400LBS	17,600LBS	12,300LBS	5' TRIPLE LEG 3/8" W/ ADJ & SELF LOCKING HOOKS
ATOSL12X5	1/2"	13MM	37,500LBS	30,800LBS	21,500LBS	5' TRIPLE LEG 1/2" W/ ADJ & SELF LOCKING HOOKS
ATOSL58X5	5/8"	16MM	56,900LBS	46,700LBS	32,700LBS	5' TRIPLE LEG 5/8" W/ ADJ & SELF LOCKING HOOKS
ATOSL34X5	3/4"	20MM	90,280LBS	74,000LBS	51,800LBS	5' TRIPLE LEG 3/4" W/ ADJ & SELF LOCKING HOOKS

Quad Leg Chain Sling with Adjuster & Hooks*



ITEM NUMBER	SIZE	MM	WLL 60°	WLL 45°	WLL 30°	DESCRIPTION
AQOS516X5	5/16"	8MM	14,100LBS	11,600LBS	8,100LBS	5' QUAD LEG 5/16 W/ ADJ & SLING HOOKS
AQOS38X5	3/8"	10MM	21,400LBS	17,600LBS	12,300LBS	5' QUAD LEG 3/8" W/ ADJ & SLING HOOKS
AQOS12X5	1/2"	13MM	37,500LBS	30,800LBS	21,500LBS	5' QUAD LEG 1/2" W/ ADJ & SLING HOOKS
AQOS58X5	5/8"	16MM	56,900LBS	46,700LBS	32,700LBS	5' QUAD LEG 5/8" W/ ADJ & SLING HOOKS
AQOS34X5	3/4"	20MM	90,280LBS	74,000LBS	51,800LBS	5' QUAD LEG 3/4" W/ ADJ & SLING HOOKS
AQOSL516X5	5/16"	8MM	14,100LBS	11,600LBS	8,100LBS	5' QUAD LEG 5/16 W/ ADJ & SELF LOCKING HOOKS
AQOSL38X5	3/8"	10MM	21,400LBS	17,600LBS	12,300LBS	5' QUAD LEG 3/8" W/ ADJ & SELF LOCKING HOOKS
AQOSL12X5	1/2"	13MM	37,500LBS	30,800LBS	21,500LBS	5' QUAD LEG 1/2" W/ ADJ & SELF LOCKING HOOKS
AQOSL58X5	5/8"	16MM	56,900LBS	46,700LBS	32,700LBS	5' QUAD LEG 5/8" W/ ADJ & SELF LOCKING HOOKS
AQOSL34X5	3/4"	20MM	90,280LBS	74,000LBS	51,800LBS	5' QUAD LEG 3/4" W/ ADJ & SELF LOCKING HOOKS

MOLD ASSEMBLY

Lifting Holes

Lifting Holes can be used to install hoist rings for ease of handling. Mold base can be configured only with Lifting Holes which are appropriate for the specific mold base size. Refer to the preceding pages for a comprehensive selection of hoist rings.

Lifting Hole Diameters

BASE SIZE	PLATE THICKNESS	
	0.875	1.375
88-1118	½-13 UNC	½-13 UNC
1123-1524	⅝-11 UNC	⅝-11 UNC
1529-1829	⅝-11 UNC	¾-10 UNC
1835-2429	⅝-11 UNC	1"-8 UNC
2435	N/A	1"-8 UNC

Lifting Holes

THREAD SIZE	S	T MAX.
½-13	1.00	1.38
⅝-11	1.25	1.75
¾-10	1.50	2.00
1"-8	2.00	2.62

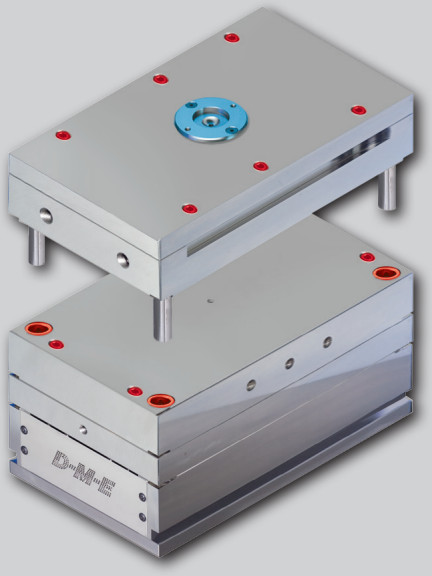

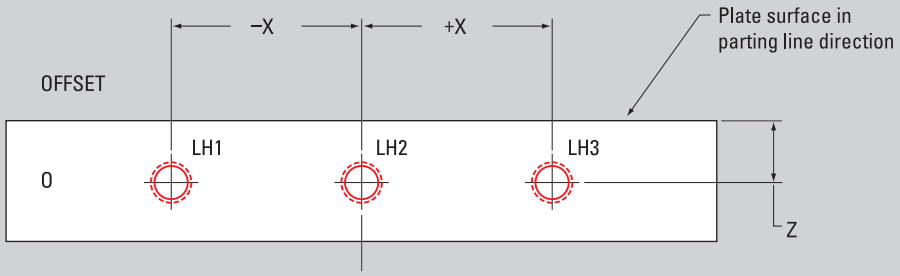

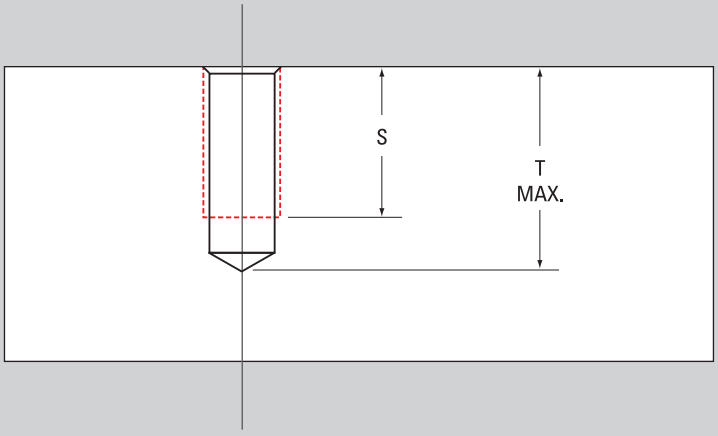

FOR QUOTING OR ORDERING, SPECI-

Lifting Holes

Lifting holes can be selected up to three per plate edge. They are available in top clamp plate, A-plate, B-plate, support plate, and bottom clamp plate.

Note that for safety reasons, only the recommended hole diameters (or larger) shown in the table are offered.

Diameter _____

Quantity in each plate _____

Plates with lift holes _____

_____

_____

_____

_____

(Prints required if not on center)

MOLD ASSEMBLY

Minimum Recommended Additional Assembly SHCS

MOLD BASE SIZE	A PLATE THICKNESS	EXISTING TOTAL NUMBER OF SHCS	MOLDING MACHINE FORCE (TONS)/MOLD OPENING FORCE (LBS.)										
			15 THROUGH 400 3000 THROUGH 80,000	425 85,000	450 90,000	475 95,000	500 100,000	525 105,000	550 110,000	575 115,000	600 120,000	625 125,000	650 130,000
88	.875	4	0	+1	+1	+1	+1	+1	+2	+2	+2	+2	+2
	1.375 TO 5.875	4	0	0	0	0	0	+1	+1	+1	+1	+1	+2
812	.875	4	0	+1	+1	+1	+1	+1	+2	+2	+2	+2	+2
	1.375 TO 5.875	4	0	0	0	0	0	+1	+1	+1	+1	+1	+2
108	.875	4	0	+1	+1	+1	+1	+1	+2	+2	+2	+2	+2
	1.375 TO 5.875	4	0	0	0	0	0	+1	+1	+1	+1	+1	+2
1012	.875	4	0	+1	+1	+1	+1	+1	+2	+2	+2	+2	+2
	1.375 TO 5.875	4	0	0	0	0	0	+1	+1	+1	+1	+1	+2
1016	.875	4	0	+1	+1	+1	+1	+1	+2	+2	+2	+2	+2
	1.375 TO 5.875	4	0	0	0	0	0	+1	+1	+1	+1	+1	+2
1020	.875	4	0	+1	+1	+1	+1	+1	+2	+2	+2	+2	+2
	1.375 TO 5.875	4	0	0	0	0	0	+1	+1	+1	+1	+1	+2
1112	.875	4	0	+1	+1	+1	+1	+1	+2	+2	+2	+2	+2
	1.375 TO 5.875	4	0	0	0	0	0	+1	+1	+1	+1	+1	+2
1114	.875	4	0	+1	+1	+1	+1	+1	+2	+2	+2	+2	+2
	1.375 TO 5.875	4	0	0	0	0	0	+1	+1	+1	+1	+1	+2
1118	.875	4	0	+1	+1	+1	+1	+1	+2	+2	+2	+2	+2
	1.375 TO 5.875	4	0	0	0	0	0	+1	+1	+1	+1	+1	+2
1123	.875	8	0	0	0	0	0	0	0	0	0	0	0
	1.375 TO 5.875	8	0	0	0	0	0	0	0	0	0	0	0
1212	.875	4	0	+1	+1	+1	+1	+1	+2	+2	+2	+2	+2
	1.375 TO 5.875	4	0	0	0	0	0	+1	+1	+1	+1	+1	+2
1215	.875	4	0	+1	+1	+1	+1	+1	+2	+2	+2	+2	+2
	1.375 TO 5.875	4	0	0	0	0	0	+1	+1	+1	+1	+1	+2
1220	.875	4	0	+1	+1	+1	+1	+1	+2	+2	+2	+2	+2
	1.375 TO 5.875	4	0	0	0	0	0	+1	+1	+1	+1	+1	+2
1223	.875	8	0	0	0	0	0	0	0	0	0	0	0
	1.375 TO 5.875	8	0	0	0	0	0	0	0	0	0	0	0
1315	.875	4	0	+1	+1	+1	+1	+1	+2	+2	+2	+2	+2
	1.375 TO 5.875	4	0	0	0	0	0	+1	+1	+1	+1	+1	+2
1318	.875	4	0	+1	+1	+1	+1	+1	+2	+2	+2	+2	+2
	1.375 TO 5.875	4	0	0	0	0	0	+1	+1	+1	+1	+1	+2
1321	.875	4	0	+1	+1	+1	+1	+1	+2	+2	+2	+2	+2
	1.375 TO 5.875	4	0	0	0	0	0	+1	+1	+1	+1	+1	+2
1323	.875	8	0	0	0	0	0	0	0	0	0	0	0
	1.375 TO 5.875	8	0	0	0	0	0	0	0	0	0	0	0
1326	.875	8	0	0	0	0	0	0	0	0	0	0	0
	1.375 TO 5.875	8	0	0	0	0	0	0	0	0	0	0	0
1329	.875	8	0	0	0	0	0	0	0	0	0	0	0
	1.375 TO 5.875	8	0	0	0	0	0	0	0	0	0	0	0
1518	.875	4	0	+1	+1	+1	+1	+1	+2	+2	+2	+2	+2
	1.375 TO 5.875	4	0	0	0	0	0	+1	+1	+1	+1	+1	+2
1524	.875	8	0	0	0	0	0	0	0	0	0	0	0
	1.375 TO 5.875	8	0	0	0	0	0	0	0	0	0	0	0
1529	.875	8	0	0	0	0	0	0	0	0	0	0	0
	1.375 TO 5.875	8	0	0	0	0	0	0	0	0	0	0	0
1616	.875	4	0	+1	+1	+1	+1	+1	+2	+2	+2	+2	+2
	1.375 TO 5.875	4	0	0	0	0	0	+1	+1	+1	+1	+1	+2
1620	.875	4	0	+1	+1	+1	+1	+1	+2	+2	+2	+2	+2
	1.375 TO 5.875	4	0	0	0	0	0	+1	+1	+1	+1	+1	+2
1623	.875	8	0	0	0	0	0	0	0	0	0	0	0
	1.375 TO 5.875	8	0	0	0	0	0	0	0	0	0	0	0
1626	.875	8	0	0	0	0	0	0	0	0	0	0	0
	1.375 TO 5.875	8	0	0	0	0	0	0	0	0	0	0	0
1629	.875	8	0	0	0	0	0	0	0	0	0	0	0
	1.375 TO 5.875	8	0	0	0	0	0	0	0	0	0	0	0
1635	.875	12	0	0	0	0	0	0	0	0	0	0	0
	1.375 TO 5.875	12	0	0	0	0	0	0	0	0	0	0	0
1724	.875	8	0	0	0	0	0	0	0	0	0	0	0
	1.375 TO 5.875	8	0	0	0	0	0	0	0	0	0	0	0
1729	.875	8	0	0	0	0	0	0	0	0	0	0	0
	1.375 TO 5.875	8	0	0	0	0	0	0	0	0	0	0	0
1818	.875	4	0	+1	+1	+1	+1	+1	+2	+2	+2	+2	+2
	1.375 TO 5.875	4	0	0	0	0	0	+1	+1	+1	+1	+1	+2
1820	.875	4	0	+1	+1	+1	+1	+1	+2	+2	+2	+2	+2
	1.375 TO 5.875	4	0	0	0	0	0	+1	+1	+1	+1	+1	+2
1823	.875	8	0	0	0	0	0	0	0	0	0	0	0
	1.375 TO 5.875	8	0	0	0	0	0	0	0	0	0	0	0
1826	.875	8	0	0	0	0	0	0	0	0	0	0	0
	1.375 TO 5.875	8	0	0	0	0	0	0	0	0	0	0	0
1829	.875	8	0	0	0	0	0	0	0	0	0	0	0
	1.375 TO 5.875	8	0	0	0	0	0	0	0	0	0	0	0
1835	.875	12	0	0	0	0	0	0	0	0	0	0	0
	1.375 TO 5.875	12	0	0	0	0	0	0	0	0	0	0	0
1924	.875	8	0	0	0	0	0	0	0	0	0	0	0
	1.375 TO 5.875	8	0	0	0	0	0	0	0	0	0	0	0
1929	.875	8	0	0	0	0	0	0	0	0	0	0	0
	1.375 TO 5.875	8	0	0	0	0	0	0	0	0	0	0	0
1935	.875	12	0	0	0	0	0	0	0	0	0	0	0
	1.375 TO 5.875	12	0	0	0	0	0	0	0	0	0	0	0
2424	.875	8	0	0	0	0	0	0	0	0	0	0	0
	1.375 TO 5.875	8	0	0	0	0	0	0	0	0	0	0	0
2429	.875	8	0	0	0	0	0	0	0	0	0	0	0
	1.375 TO 5.875	8	0	0	0	0	0	0	0	0	0	0	0
2435	.875	12	0	0	0	0	0	0	0	0	0	0	0
	1.375 TO 5.875	12	0	0	0	0	0	0	0	0	0	0	0

NOTES:

1. Blue color configurations require additional assembly screws.
2. Numbers of additional assembly screws suggested are minimum required.
3. No safety factor considered. The moldmaker is entirely responsible for the chosen configuration.

KEY:

= No additional assembly screws required

= Add screws as noted (+)

N/A = Not available/not recommended

MOLD ASSEMBLY

Minimum Recommended Additional Assembly SHCS

MOLD BASE SIZE	A PLATE THICKNESS	EXISTING TOTAL NUMBER OF SHCS	MOLDING MACHINE FORCE (TONS)/MOLD OPENING FORCE (LBS.)													
			675 135,000	700 140,000	725 145,000	750 150,000	775 155,000	800 160,000	825 165,000	850 170,000	875 175,000	900 180,000	925 185,000	950 190,000	975 195,000	1000 200,000
88	.875	4	+4	+4	+4	+4	+4	+4	+4	+4	+4	+4	+4	N/A	N/A	N/A
	1.375 TO 5.875	4	+2	+2	+2	+2	+4	+4	+4	+4	+4	+4	+4	+4	+4	+4
812	.875	4	+4	+4	+4	+4	+4	+4	+4	+4	+4	+4	+4	N/A	N/A	N/A
	1.375 TO 5.875	4	+2	+2	+2	+2	+4	+4	+4	+4	+4	+4	+4	+4	+4	+4
108	.875	4	+4	+4	+4	+4	+4	+4	+4	+4	+4	+4	+4	N/A	N/A	N/A
	1.375 TO 5.875	4	+2	+2	+2	+2	+4	+4	+4	+4	+4	+4	+4	+4	+4	+4
1012	.875	4	+4	+4	+4	+4	+4	+4	+4	+4	+4	+4	+4	N/A	N/A	N/A
	1.375 TO 5.875	4	+2	+2	+2	+2	+4	+4	+4	+4	+4	+4	+4	+4	+4	+4
1016	.875	4	+4	+4	+4	+4	+4	+4	+4	+4	+4	+4	+4	N/A	N/A	N/A
	1.375 TO 5.875	4	+2	+2	+2	+2	+4	+4	+4	+4	+4	+4	+4	+4	+4	+4
1020	.875	4	+4	+4	+4	+4	+4	+4	+4	+4	+4	+4	+4	N/A	N/A	N/A
	1.375 TO 5.875	4	+2	+2	+2	+2	+4	+4	+4	+4	+4	+4	+4	+4	+4	+4
1112	.875	4	+4	+4	+4	+4	+4	+4	+4	+4	+4	+4	+4	N/A	N/A	N/A
	1.375 TO 5.875	4	+2	+2	+2	+2	+4	+4	+4	+4	+4	+4	+4	+4	+4	+4
1114	.875	4	+4	+4	+4	+4	+4	+4	+4	+4	+4	+4	+4	N/A	N/A	N/A
	1.375 TO 5.875	4	+2	+2	+2	+2	+4	+4	+4	+4	+4	+4	+4	+4	+4	+4
1118	.875	4	+4	+4	+4	+4	+4	+4	+4	+4	+4	+4	+4	N/A	N/A	N/A
	1.375 TO 5.875	4	+2	+2	+2	+2	+4	+4	+4	+4	+4	+4	+4	+4	+4	+4
1123	.875	8	0	0	0	0	0	0	0	0	0	0	0	+2	+2	+2
	1.375 TO 5.875	8	0	0	0	0	0	0	0	0	0	0	0	0	0	0
1212	.875	4	+4	+4	+4	+4	+4	+4	+4	+4	+4	+4	+4	+6	+6	+6
	1.375 TO 5.875	4	+2	+2	+2	+2	+4	+4	+4	+4	+4	+4	+4	+4	+4	+4
1215	.875	4	+4	+4	+4	+4	+4	+4	+4	+4	+4	+4	+4	+6	+6	+6
	1.375 TO 5.875	4	+2	+2	+2	+2	+4	+4	+4	+4	+4	+4	+4	+4	+4	+4
1220	.875	4	+4	+4	+4	+4	+4	+4	+4	+4	+4	+4	+4	+6	+6	+6
	1.375 TO 5.875	4	+2	+2	+2	+2	+4	+4	+4	+4	+4	+4	+4	+4	+4	+4
1223	.875	8	0	0	0	0	0	0	0	0	0	0	0	+2	+2	+2
	1.375 TO 5.875	8	0	0	0	0	0	0	0	0	0	0	0	0	0	0
1315	.875	4	+4	+4	+4	+4	+4	+4	+4	+4	+4	+4	+4	+6	+6	+6
	1.375 TO 5.875	4	+2	+2	+2	+2	+4	+4	+4	+4	+4	+4	+4	+4	+4	+4
1318	.875	4	+4	+4	+4	+4	+4	+4	+4	+4	+4	+4	+4	+6	+6	+6
	1.375 TO 5.875	4	+2	+2	+2	+2	+4	+4	+4	+4	+4	+4	+4	+4	+4	+4
1321	.875	4	+4	+4	+4	+4	+4	+4	+4	+4	+4	+4	+4	+6	+6	+6
	1.375 TO 5.875	4	+2	+2	+2	+2	+4	+4	+4	+4	+4	+4	+4	+4	+4	+4
1323	.875	8	0	0	0	0	0	0	0	0	0	0	0	+2	+2	+2
	1.375 TO 5.875	8	0	0	0	0	0	0	0	0	0	0	0	0	0	0
1326	.875	8	0	0	0	0	0	0	0	0	0	0	0	+2	+2	+2
	1.375 TO 5.875	8	0	0	0	0	0	0	0	0	0	0	0	0	0	0
1329	.875	8	0	0	0	0	0	0	0	0	0	0	0	+2	+2	+2
	1.375 TO 5.875	8	0	0	0	0	0	0	0	0	0	0	0	0	0	0
1518	.875	4	+4	+4	+4	+4	+4	+4	+4	+4	+4	+4	+4	+6	+6	+6
	1.375 TO 5.875	4	+2	+2	+2	+2	+4	+4	+4	+4	+4	+4	+4	+4	+4	+4
1524	.875	8	0	0	0	0	0	0	0	0	0	0	0	+2	+2	+2
	1.375 TO 5.875	8	0	0	0	0	0	0	0	0	0	0	0	0	0	0
1529	.875	8	0	0	0	0	0	0	0	0	0	0	0	+2	+2	+2
	1.375 TO 5.875	8	0	0	0	0	0	0	0	0	0	0	0	0	0	0
1616	.875	4	+4	+4	+4	+4	+4	+4	+4	+4	+4	+4	+4	+6	+6	+6
	1.375 TO 5.875	4	+2	+2	+2	+2	+4	+4	+4	+4	+4	+4	+4	+4	+4	+4
1620	.875	4	+4	+4	+4	+4	+4	+4	+4	+4	+4	+4	+4	+6	+6	+6
	1.375 TO 5.875	4	+2	+2	+2	+2	+4	+4	+4	+4	+4	+4	+4	+4	+4	+4
1623	.875	8	0	0	0	0	0	0	0	0	0	0	0	+2	+2	+2
	1.375 TO 5.875	8	0	0	0	0	0	0	0	0	0	0	0	0	0	0
1626	.875	8	0	0	0	0	0	0	0	0	0	0	0	+2	+2	+2
	1.375 TO 5.875	8	0	0	0	0	0	0	0	0	0	0	0	0	0	0
1629	.875	8	0	0	0	0	0	0	0	0	0	0	0	+2	+2	+2
	1.375 TO 5.875	8	0	0	0	0	0	0	0	0	0	0	0	0	0	0
1635	.875	12	0	0	0	0	0	0	0	0	0	0	0	0	0	0
	1.375 TO 5.875	12	0	0	0	0	0	0	0	0	0	0	0	0	0	0
1724	.875	8	0	0	0	0	0	0	0	0	0	0	0	+2	+2	+2
	1.375 TO 5.875	8	0	0	0	0	0	0	0	0	0	0	0	0	0	0
1729	.875	8	0	0	0	0	0	0	0	0	0	0	0	+2	+2	+2
	1.375 TO 5.875	8	0	0	0	0	0	0	0	0	0	0	0	0	0	0
1818	.875	4	+4	+4	+4	+4	+4	+4	+4	+4	+4	+4	+4	+6	+6	+6
	1.375 TO 5.875	4	+2	+2	+2	+2	+4	+4	+4	+4	+4	+4	+4	+4	+4	+4
1820	.875	4	+4	+4	+4	+4	+4	+4	+4	+4	+4	+4	+4	+6	+6	+6
	1.375 TO 5.875	4	+2	+2	+2	+2	+4	+4	+4	+4	+4	+4	+4	+4	+4	+4
1823	.875	8	0	0	0	0	0	0	0	0	0	0	0	+2	+2	+2
	1.375 TO 5.875	8	0	0	0	0	0	0	0	0	0	0	0	0	0	0
1826	.875	8	0	0	0	0	0	0	0	0	0	0	0	+2	+2	+2
	1.375 TO 5.875	8	0	0	0	0	0	0	0	0	0	0	0	0	0	0
1829	.875	8	0	0	0	0	0	0	0	0	0	0	0	+2	+2	+2
	1.375 TO 5.875	8	0	0	0	0	0	0	0	0	0	0	0	0	0	0
1835	.875	12	0	0	0	0	0	0	0	0	0	0	0	0	0	0
	1.375 TO 5.875	12	0	0	0	0	0	0	0	0	0	0	0	0	0	0
1924	.875	8	0	0	0	0	0	0	0	0	0	0	0	+2	+2	+2
	1.375 TO 5.875	8	0	0	0	0	0	0	0	0	0	0	0	0	0	0
1929	.875	8	0	0	0	0	0	0	0	0	0	0	0	+2	+2	+2
	1.375 TO 5.875	8	0	0	0	0	0	0	0	0	0	0	0	0	0	0
1935	.875	12	0	0	0	0	0	0	0	0	0	0	0	0	0	0
	1.375 TO 5.875	12	0	0	0	0	0	0	0	0	0	0	0	0	0	0
2424	.875	8	0	0	0	0	0	0	0	0	0	0	0	+2	+2	+2
	1.375 TO 5.875	8	0	0	0	0	0	0	0	0	0	0	0	0	0	0
2429	.875	8	0	0	0	0	0	0	0	0	0	0	0	+2	+2	+2
	1.375 TO 5.875	8	0	0	0	0	0	0	0	0	0	0	0	0	0	0
2435	.875	12	0	0	0	0	0	0	0	0	0	0	0	0	0	0
	1.375 TO 5.875	12	0	0	0	0	0	0	0	0	0	0	0	0	0	0

NOTES:

1. Blue color configurations require additional assembly screws.
2. Numbers of additional assembly screws suggested are minimum required.
3. No safety factor considered. The moldmaker is entirely responsible for the chosen configuration.

KEY:

= No additional assembly screws required

= Add screws as noted (+)

N/A = Not available/not recommended

MOLD ASSEMBLY

MUD Quick-Change™ Components

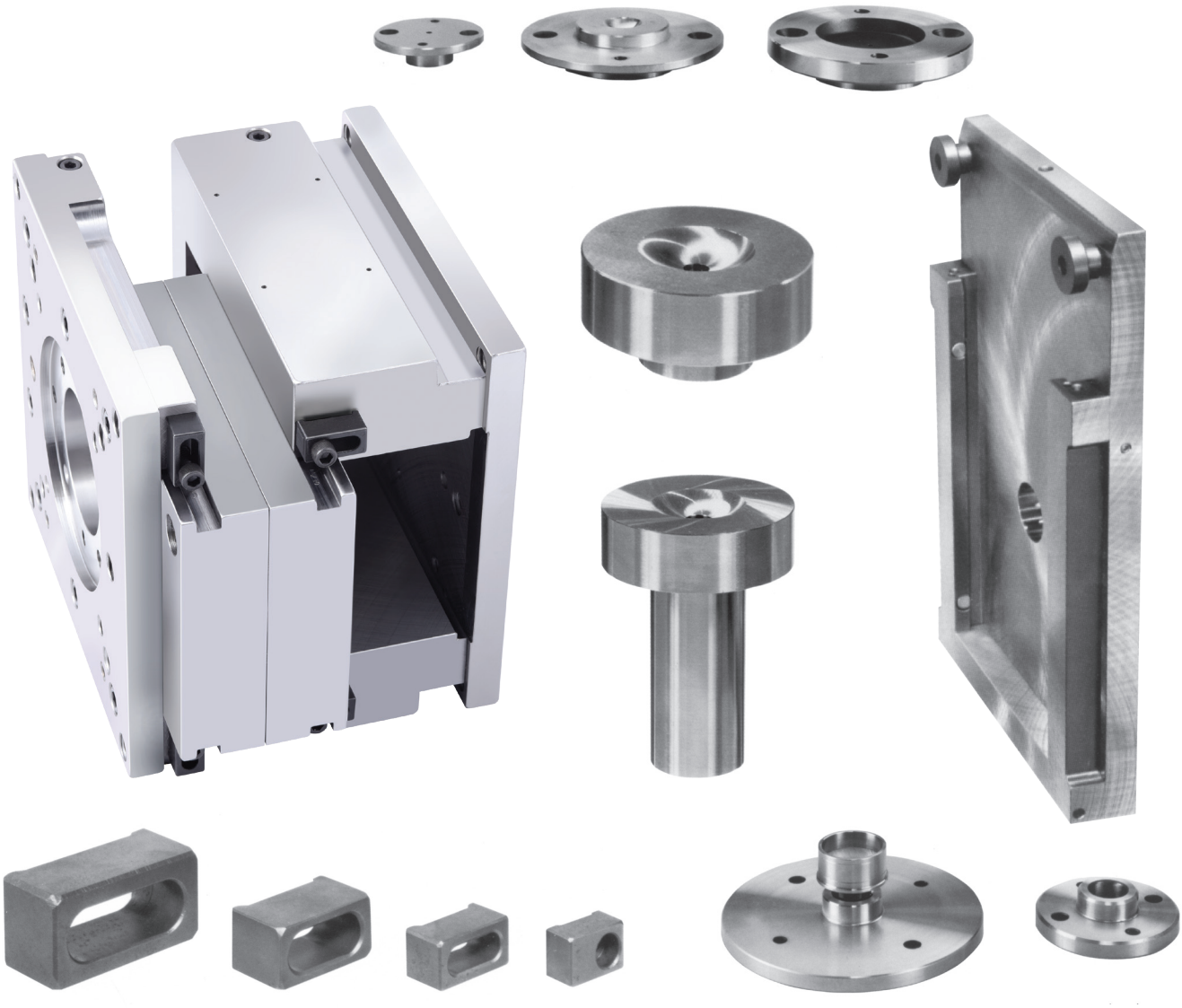

Customize MUD frames and insert molds with a full range of components

MUD® Quick-Change frames and companion insert mold series are available with a full range of components. These components permit tailoring MUD frames and insert molds to every injection molding machine up to 500 tons. This makes the cost-saving benefits and time-saving advantages of the Master Unit Die Concept available to virtually every mold maker and plastic molder in the industry.

See the MUD Quick-Change Systems catalog for all of the standard parts installed in the MUD basic Quick-Change frames and companion insert molds. U, H and Double H frame components include sprue bushings, locating rings and guide posts. Components for T style and standard style insert molds include leader pins and bushings, ejector plates and ear plates.

MOLD COMPONENTS

World Headquarters
DME Company
29111 Stephenson Highway
Madison Heights, Michigan 48071
800-626-6653 (toll-free)
248-398-6000 worldwide
DME@DME.net
www.DME.net
store.DME.net

DME Canada
5345 Unit# 3
Windsor , ON
N9G 0C4 Canada
800-387-6600 (toll-free)
DME_Canada@DME.net

DME Mexico
Circuito el Marqués Norte
No. 55
Parque Industrial El Marqués
El Marqués, Querétaro
CP 76246
52.442.713.5666
DME_Mexico@DME.net





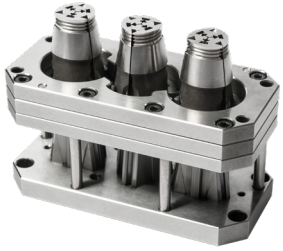







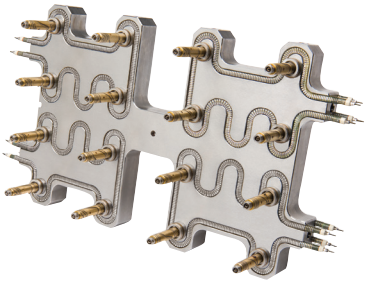



eSTORE
store.dme.net



fresh start Polymer Solutions Inc.

