D-M-E

SMART SERIES®

Low Voltage Temperature Control Systems For Runnerless Molding

- COMPACT, PORTABLE AND EXPANDABLE MODULAR DESIGN
- EASY TO USE
- ACCURATE AND DEPENDABLE CONTROL FOR LOW VOLTAGE APPLICATIONS

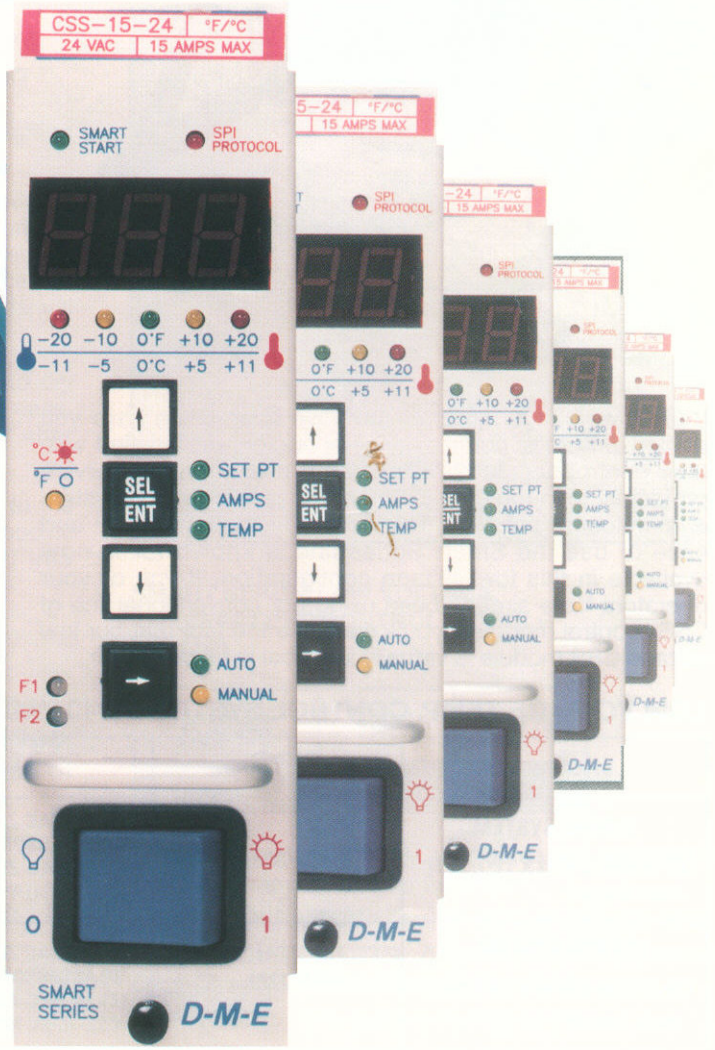

D-M-E Standard

Smart Series® Low Voltage Temperature Control System

MFA-0801 & MFA-1201

COMPARE THESE FEATURES WITH OTHER LOW VOLTAGE SYSTEMS ON THE MARKET:

- Combines 240VAC and 24VAC zones in one integrated unit.
- Modular design is easier to service, debug and expand upon. Can also be less expensive since you buy only the zones you need now...add zones when and if required in the future.
- Fully isolated thermocouple inputs for more accurate readings with either grounded or ungrounded thermocouples. Thermocouple reading problems often associated with multiplexed systems are eliminated.
- Current monitoring is available during normal system operation. No need to switch to a diagnostics mode.
- Bumpless transfer capability permits continued operation in the event of a thermocouple failure. The system's method of "learning" the fallback percent power value is more accurate than competitive methods.
- Provides remote alarm and standby heat capabilities by using a TAS module within the mainframe.
- SPI protocol compatible remote operating capabilities by using a CIM module within the mainframe.

If the low voltage systems you have been using have you baffled with their complexity of operation, dissatisfied with their control accuracy or frustrated over repair or service problems, then the D-M-E Smart Series low voltage system is a welcome solution. The accuracy, dependability and ease of use the Smart Series line is known for is now available in this low voltage configuration. If you or your operators have already been using our conventional line of CSS® control modules, you'll welcome the fact that our low voltage CSS module is virtually identical in its operation.

Each main frame is supplied with communications capability for use with optional temperature alarm/standby heat (TAS) or computer interface (CIM) modules, floor stand, fused circuit breaker/disconnect and the appropriate step down transformer for the low voltage zones.

Control and accessory modules, cables, mold connectors and terminal mounting boxes are available to permit customization of a complete system to suit your individual mold requirements.

LOW VOLTAGE TEMP. CONTROL SYSTEMS (240 VAC, 3 phase, 4-wire, 50-60 Hz input power is standard)

DESCRIPTION	CATALOG NUMBER	ACCOMODATES	INCLUDES
8-ZONE SYSTEM (20-3/16W x 9" H x 11-7/16 D main frame)	MFA-0801	(4) 240 VAC ZONES FOR TEMP. CONTROL OR ACCESSORY MODULES (CIM OR TAS) (4) 24 VAC ZONES FOR LOW VOLTAGE (CSS-15-24) MODULES	COMMUNICATION CAPABILITY, CIRCUIT BREAKER DISCONNECT, FLOOR STAND, STEP DOWN TRANSFORMER FOR 24 VOLT ZONES
12-ZONE SYSTEM (28-3/16W x 9" H x 11-7/16 D main frame)	MFA-1201	(4) 240 VAC ZONES FOR TEMP. CONTROL OR ACCESSORY MODULES (CIM OR TAS) (8) 24 VAC ZONES FOR LOW VOLTAGE (CSS-15-24) MODULES	Overall dimensions on floor stand: 8 ZONE: 45-1/2" H x 26" D x 20-3/16"W 12 ZONE: 45-1/2" H x 26" D x28-3/16 W

D-M-E Standard

Smart Series® Low Voltage Temperature Control Module with Digital Display and Communications

CSS-15-24 (15 AMP, 24 VOLT)

The Smart Series Low Voltage CSS® module provides the molder with the first fully comprehensive temperature control module. This microprocessor based unit incorporates the most complete list of control features while providing full SPI protocol communications capability with a D-M-E CIM (Computer Interface Module). The CSS is also compatible with the D-M-E TAS Module (Temperature Alarm/ Standby Heat).

This CSS module is compatible with D-M-E's Low Voltage Smart Series mainframes only. While the CSS module was designed with computer integrated manufacturing in mind, it also provides the highest level of performance as a stand alone module. Even when operating independently the CSS offers many features: A multi-function display, advanced diagnostics, auto or manual bumpless transfer and a patented interactive Smart Start®*. A setpoint memory feature also allows the user to power up the module with the same setpoint as the day before.

Advanced diagnostics will automatically alert the user to unusual fault conditions. This is done by alternating the following fault codes with the normal display in three second intervals:

Shorted Thermocouple: Shi
Reversed Thermocouple: bci
Open Thermocouple: oPi.
Open Triac: oPO
Shorted Triac: ShO

Over and under temperature warnings are indicated by flashing LED's directly under the display.

In the event of a thermocouple failure, the CSS will automatically invoke bumpless transfer to a percent power mode based on the last valid percentage learned before the thermocouple failure. If desired, manual bumpless transfer may be selected, in which case a thermocouple fault will turn off power to the heater until the manual percent power mode is activated by the operator.

With its unique Smart Start function the CSS has the ability to dry out a heater which may have acquired moisture inside its case. Smart Start automatically applies low voltage to the heater after initial start-up.

A unique rejection scheme (patent pending) has been added to the CSS-15-24 to prevent the accidental insertion of a 24 VAC module into a 240 VAC main frame. The module will only insert into mainframe properly prepared to operate at 24 VAC.

* U.S. Pat. No. 5,039,842

For additional descriptive information and specifications, see pages Q26-27 in Smart Series brochure SMSB6. Specifications for the CSS-15-24 are identical to those of the CSS-15-02 except as follows:

- Ground fault detection circuitry has been eliminated
- **Output voltage:** 24 VAC nominal, single phase, 15 amperes, 360 watts @ 24 VAC
- **Input voltage:** 24 VAC +10% -20%

COMPATIBLE WITH TAS (PAGE Q-34) AND CIM (PAGE Q-36) MODULES

SMART SERIES LOW VOLTAGE TEMPERATURE CONTROL MODULE (24 VAC)

CATALOG NUMBER	AMPS	WATTS
CSS-15-24	15	360

NOTE: Standard (24 VAC) modules are compatible with main frames wired for 24 VAC.

FOR °C OPERATION: Switch to °C on circuit board.

FUSE REQUIREMENTS: (2) ABC-15 fuses (Bussman only). (2) spare fuses included with module.

WARRANTY: One year (excluding fuses)

D-M-E Standard

Smart Series® Low Voltage Temperature Control System Accessories

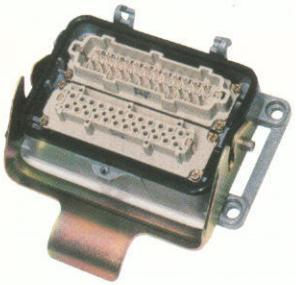

MOLD POWER/THERMOCOUPLE CONNECTOR

TERMINAL MOUNTING BOX

POWER/THERMOCOUPLE CABLE

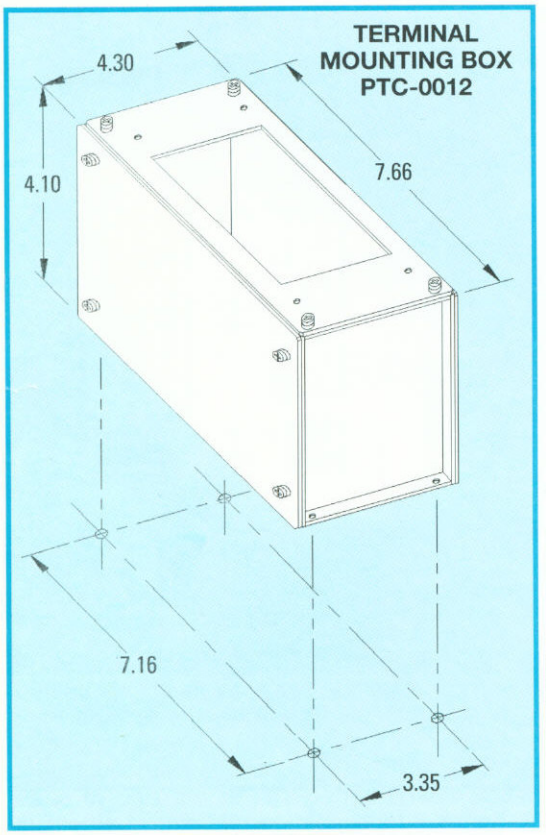

MOLD POWER/THERMOCOUPLE CONNECTOR
Provides for up to 12 power output and thermocouple input zones in one connector.

CATALOG NUMBER
TPC-0001

TERMINAL MOUNTING BOX
Constructed of heavy gauge steel, pre-cut and drilled for quick mounting of connector to box and box to mold. Connector mounting hardware is supplied. Connector to be ordered separately

CATALOG NUMBER
PTC-0012

POWER/THERMOCOUPLE CABLE
Cable is wired for 12 zones for use with 8 or 12 zone systems. Integral retaining latches on mold and frame connectors provide secure cable connectors.

CATALOG NUMBER	LENGTH
CPT-1210	10 FEET
CPT-1220	20 FEET

APPLICATION NOTES:

1. If mounting two terminal mounting boxes side by side on their long dimension (7.66"), allow 2 1/4" minimum clearance between them for cable retaining latches.
2. Clearance required above top of terminal mounting box for connector, cable connector hood and cable bend is approximately 14".

For blank panels, fuses, connector kits and other accessories, see Smart Series brochure SMSB6.

D-M-E

D-M-E COMPANY (WORLD HEADQUARTERS)
29111 Stephenson Hwy.
Madison Heights, MI 48071
1-800-626-6653
FAX: (810) 398-6174

D-M-E OF CANADA, LTD.
6210 Northwest
Mississauga, Ontario L4v1J6
1-800-387-6600
FAX: (905) 677-5280

DME